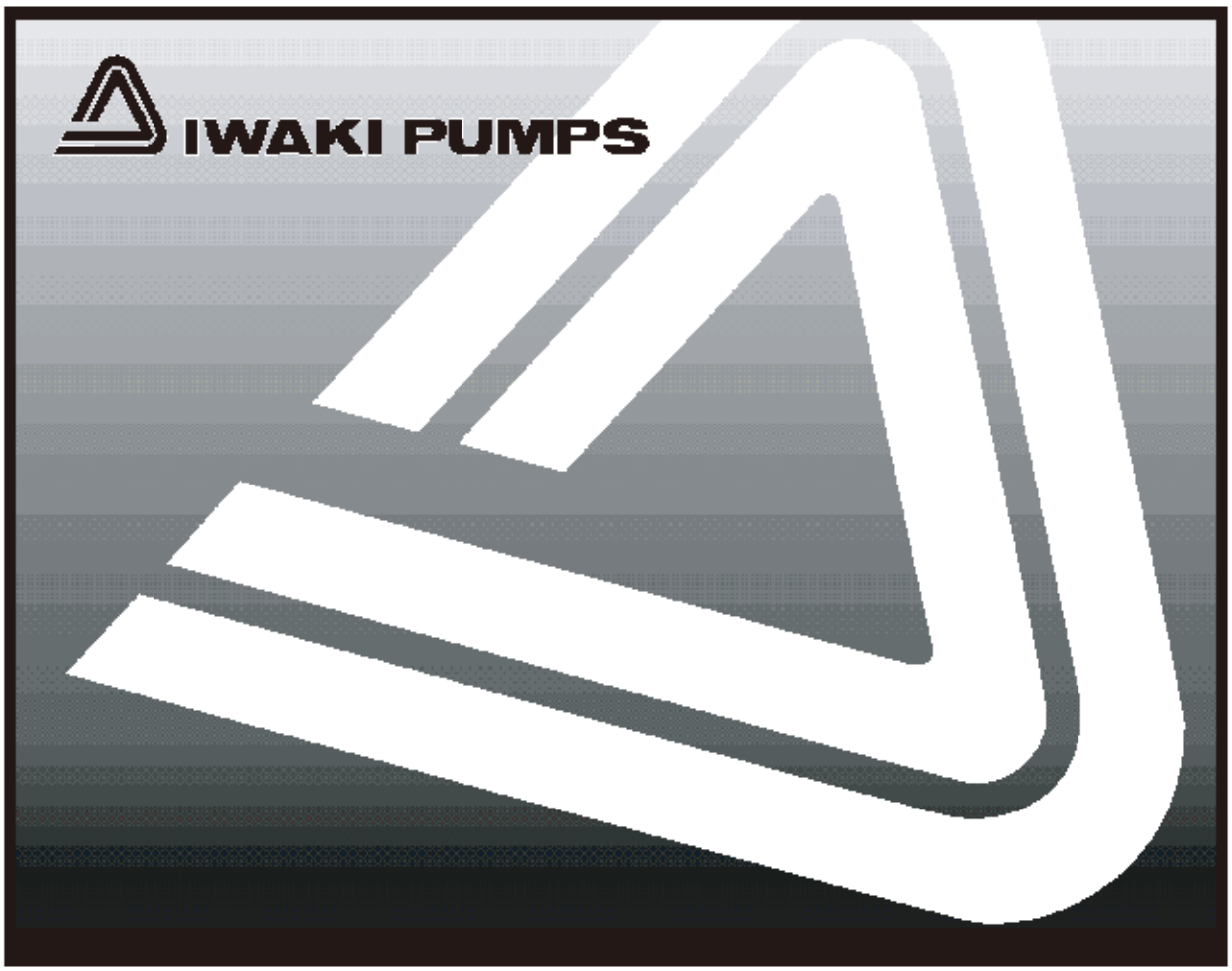

IWAKI Magnetic Drive Pump

MX-F250/-F403 (Europe)

Instruction Manual

⚠Read this manual before use of product

Thank you for selecting an Iwaki MX-F Series Magnetic Drive Pump. This instruction manual deals with *"Safety instructions"*, *"Outline"*, *"Installation"*, *"Operation"* and *"Maintenance"* sections. Please read through this manual carefully to ensure the optimum performance, safety and service of your pump.

Contents

Important instructions ····· **1**

Safety instructions ····· **2**

Outline
1. Unpacking & Inspection ····· 6
2. Product outline ····· 6
3. Model code ····· 7
4. Specification ····· 8
5. Dimension ····· 9
6. Part names ····· 10
7. Overview ····· 13

Installation
1. Before installation ····· 15
2. Installation/Pipework/Wiring ····· 17

Operation
1. Operational precautions ····· 24
2. Before operation ····· 25
3. Operation ····· 25

Maintenance
1. Troubleshooting ····· 28
2. Maintenance & Inspection ····· 29
3. Spare & Wear parts ····· 31
4. Disassembly & Assembly ····· 34

EC DECLARATION OF CONFORMITY ····· 45
UK DECLARATION OF CONFORMITY ····· 46
CE/UKCA conformity ····· 47
Waste Electrical and Electronic Equipment (WEEE) ····· 47

This instruction manual should be kept on hand by the end user for quick reference.

Contact us or your nearest dealer if you have any questions.

Important instructions

For the Safe and Correct Handling of the Pump

- "Safety Instruction" section deals with important details about handling of the product. Before use, read this section carefully for the prevention of personal injury or property damage.
- Observe the instructions accompanied with "WARNING" or "CAUTION" in this manual. These instructions are very important for protecting users from dangerous situations.
- The symbols on this instruction manual have the following meanings:

⚠ **WARNING**	**Nonobservance or misapplication of "Warning" sections could lead to a serious accident which may result in death.**
⚠ **CAUTION**	**Nonobservance or misapplication of "Caution" sections could lead to personal injury or property damage.**

Types of Symbols



Indicates that "Warning" or "Caution" must be exercised. Inside this triangle, a concrete and practical image provided as a warning or caution message is depicted.



Indicates a prohibited action or procedure. Inside or near this circle, a concrete and practical image of the activity to be avoided is depicted.



Indicates an important action or procedure which must be performed or carried out without fail. Failure to follow the instructions herein can lead to malfunction or damage to the pump.

For Use of Our ATEX-Certified Models in Explosive Environments

Use the attached additional instructions as well as this standard manual.

⚠ Export Restrictions

Technical information contained in this instruction manual might be treated as controlled technology in your countries, due to agreements in international regime for export control.

Please be reminded that export license/permission could be required when this manual is provided, due to export control regulations of your country.

Safety instructions

⚠WARNING

- **Turn off power before service**
  Risk of personal injury. Before performing any service, turn off power to stop the pump and related devices and display a warning sign near the power switch to prevent others from restoring power during service.


Turning off power

- **Wear protective clothing**
  Always wear protective clothing such as an eye protection, chemical resistant gloves, a mask and a face shield during disassembly, assembly or maintenance work. The specific solution will dictate the degree of protection. Refer to SDS precautions from the solution supplier.


Wear protection

- **Use strong ropes (chains) for lifting up the pump**
  Keep away from the pump while it is lifted up for installation. Serious injury may result if lifting ropes (chains) break. Observe the working load limit of the ropes (chains).


Caution

- **Use the eye bolt (if provided)**
  Use the eye bolt only when lifting the pump. Otherwise, the pump may fall and cause serious injury.


Caution

- **Do not lift the pump by holding any plastic parts (pump unit, flange or base)**
  If a plastic part breaks, the pump may fall, resulting in serious injury.


Prohibited

- **Do not modify the pump**
  Alterations to the pump carry a high degree of risk. It is not the manufacturer's responsibility for any failure or injury resulting from alterations to the pump.


Do not rework or alter

- **Daily inspection and maintenance**
  Daily inspection and maintenance are required for the prevention of chemical spray or leakage when handling:
  - Explosive or flammable liquid,
  - Corrosive liquid, or
  - Harmful liquid.


Requirement

- **Do not catch the finger**
  Magnetic force of the pump is powerful. When taking apart or putting together the pump, take measures not to catch the finger in the adapter. Also, keep the drive magnet and the driven magnet free from iron debris/ powder.


Requirement

- **Access limitation**
  The magnet drive pump has a pair of strong magnets (the magnet capsule unit and drive magnet). The strong magnet field could adversely affect the persons who are assisted by electronic devices such as the pacemaker.


Requirement

Safety instructions

⚠ CAUTION

- **Qualified personnel only**
  The pump should be handled or operated by qualified personnel with a full understanding of the pump. Any person not familiar with the product should not take part in the operation or management of the pump. If necessary, provide training to operators.



- **Do not use the pump in any condition other than its intended purpose**
  The use of the pump in any conditions other than those clearly specified may result in failure or injury. Use this product in specified conditions only.



- **Use specified power only**
  Do not apply power other than that specified on the nameplate. Otherwise, failure, fire or electrical shock may result. Ensure the pump is properly grounded.



- **Ventilation**
  Fumes or vapours can be hazardous with certain solutions. Ensure proper ventilation at the operation site.



- **Spill precautions**
  Ensure protection and containment of solution in the event of plumbing or pump damage (secondary containment). Do not drain the liquid onto the floor.



- **Do not run pump dry**
  Do not run pump dry (operation without priming water or with a suction valve closed). Internal parts are excessively worn by friction heat and fatal pump damage results.



- **Do not operate the pump in a flammable atmosphere**
  Do not place explosive or flammable material near the pump.



- **Do not stand on the pump**
  Injury or damage may result when the pump turns over.



- **Do not touch the pump or pipe with bare hands**
  Risk of burns. The surface temperature of the pump or piping becomes very high during and immediately after operation, depending on the liquid temperature.



- **Grounding**
  Risk of electric shock! Always properly ground the pump. Conform to local electric codes.



Safety instructions

⚠ CAUTION

- **Install a GFCI (earth leakage breaker)**
  An electrical failure of the pump may adversely affect other devices on the same line. Purchase and install an earth leakage breaker separately.


Electrical shock

- **Do not install/store the pump:**
  - In a flammable/explosive/corrosive atmosphere.
  - In a dusty/humid environment.
  - Where ambient temperature can exceed 0-40ºC.
  - Where ambient humidity can exceed 35-85%RH.
  - In direct sunlight or wind & rain (except an outdoor type)
  - Under mechanical vibrations.


Prohibited

- **Before starting the pump**
  Ensure no one is around the pump before connecting the power. The pump does not have an ON-OFF switch and starts automatically when the power cable is plugged in.


Caution

- **Remove foreign matter**
  If foreign matter enters the pump, turn off the power and clean the pump. Otherwise, the pump may be damaged.


Caution

- **Disposal of a used pump**
  Remove the liquid and flush it out before the pump is disconnected from piping. Dispose of any used or damaged pump and the removed liquid in accordance with local rules and regulations. See page 47 to comply with the European Directive 2012/19/EU on waste electrical and electronic equipment.


Requirement

- **Static electricity**
  When low electric conductivity liquids such as ultra-pure water and fluor inactive liquid (e.g. Fluorinert™) are handled, static electricity may be generated in the pump and may cause static discharge. Take countermeasures to remove static electricity.


Requirement

- **Do not operate the pump while wet with solution or water**
  Failure or injury may result. Immediately dry off the pump if it gets wet.


Caution

Outline

1. Unpacking & Inspection 6

2. Product outline 6

3. Model code 7

4. Specification 8

5. Dimension 9

6. Part names 10

7. Overview 13

Outline

1. Unpacking & Inspection

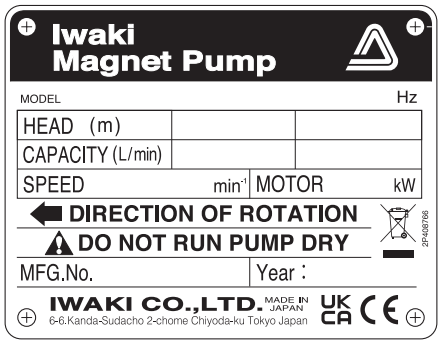

*The CE/UKCA markings on our product(s) are for us to market the product(s) into the European Union market / the Great Britain (England, Wales and Scotland) market, however, the CE/UKCA markings do not ensure any safety or conformity of the product(s) outside the EU/GB markets.
When the pump is incorporated into the equipment marketed in the EU/GB markets, such equipment must meet all the requirements of applicable directives/regulations. In such a case, any person who places the equipment on the markets must carry CE/UKCA marks on the equipment as a manufacturer.

Open the package and check that the product conforms to your order. If any problem or inconsistency is found, immediately contact your distributor.

1. Check the nameplate to see if the information such as model codes, discharge capacity, discharge pressure and stroke rate are as ordered.
2. Check for transit damage, deformation, and loose bolts.

2. Product outline

The MX-F is a magnetic drive centrifugal pump with fluoroplastic and fine ceramic wet ends and is capable of handling a strong acid and alkali.

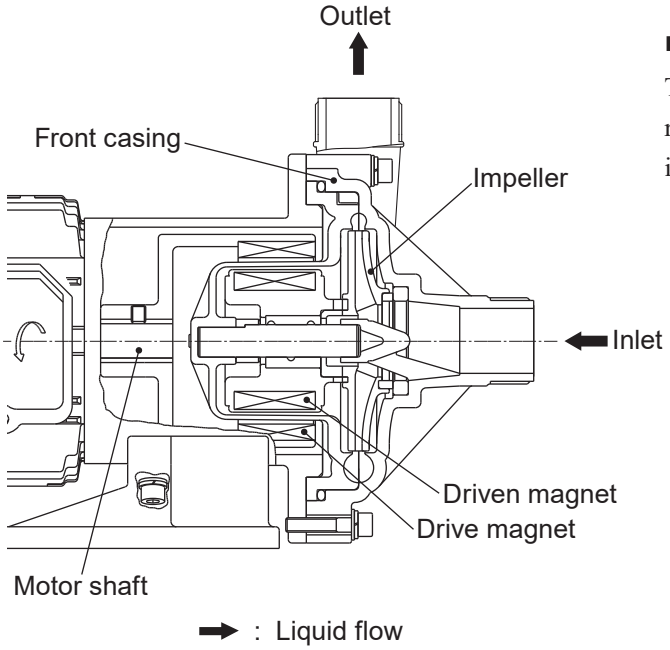

■ Principle of operation

The magnetic force between drive and driven magnets rotates the impeller in the pump chamber, where a liquid is transferred from the inlet to outlet.

3. Model code

MX-F 400 CF V T E - L S

a b c d e f g h

a. Series name

MX-F: MX-F series (CFRETFE casing)

b. Pump I.D. and motor output

Code	Pump I.D. (Inlet × Outlet)	Motor output
250	25A × 25A	0.37kW
251		0.75kW
400	40A × 40A	0.37kW
401		0.75kW
402	50A × 40A	1.5kW
403		2.2kW

NOTE: The motor is 2-pole, 3-phase.

c. Sliding parts

CF: High density carbon bearing × High purity alumina ceramic spindle

RF: PTFE (with filler) × High purity alumina ceramic spindle

KK: SiC bearing × SiC spindle

d. O ring materials

V: FKM

E: EPDM

A: Aflas®

e. Impellers

T: Specific gravity limit 1.2

T2*: Specific gravity limit 1.2

V: Specific gravity limit 1.5

W: Specific gravity limit 1.8-2.0

*The code "T2" is used with an exclusive IE2/IE3 motor. Applicable models are MX-F400 and -F401.

f. Motors

E: IEC motor

g. Flange type

L: Lap joint

LM: Threaded joint (only F250/F251)

No code: Threaded joint

h. Special version

S: Special version

4. Specification

50Hz

Model	Inlet × Outlet	S.G. limit	Motor output
MX-F250T	25×25	1.2	0.37kW
MX-F250V		1.5	
MX-F250W		1.8-2.0	
MX-F251T		1.2	0.75kW
MX-F251V		1.5	
MX-F251W		1.8-2.0	
MX-F400T	40×40	1.2	0.37kW
MX-F400T2		1.2	
MX-F400V		1.5	
MX-F400W		1.8-2.0	
MX-F401T		1.2	0.75kW
MX-F401T2		1.2	
MX-F401V		1.5	
MX-F401W		1.8-2.0	
MX-F402T	50×40	1.2	1.5kW
MX-F402V		1.5	
MX-F402W		1.8-2.0	
MX-F403T		1.2	2.2kW
MX-F403V		1.5	
MX-F403W		1.8-2.0	

■ Pump weight with no motor

	MX-F250	MX-F251	MX-F400	MX-F401	MX-F402	MX-F403
Lap joint	8.0 kg	10.5 kg	6.5 kg	10.5 kg	14.0 kg	15.0 kg
Threaded joint	7.7 kg	10.2 kg	6.2 kg	10.2 kg	13.5 kg	14.5 kg

5. Dimension

Threaded Joint

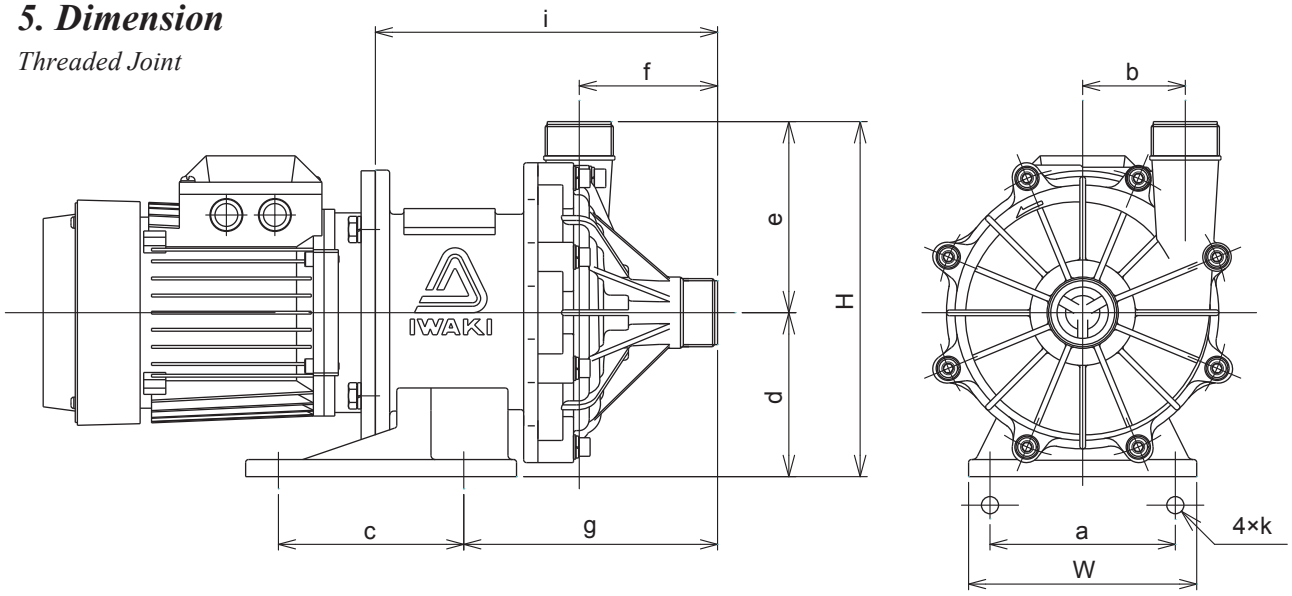

Model	W	H	a	b	c	d	e	f	g	i	k
MX-F250	160	247.5	130	65	130	115	132.5	82.5	155.5	213.5	12
MX-F251	160	247.5	130	65	130	115	132.5	82.5	163.5	225.5	12
MX-F400	140	219	110	54	98	95	124	81	144	215	12
MX-F401	160	249	130	72	130	115	134	97	178	240	12
MX-F402/-F403	260	274	208	80	200	120	154	83	151	235	14×36

Lap joint

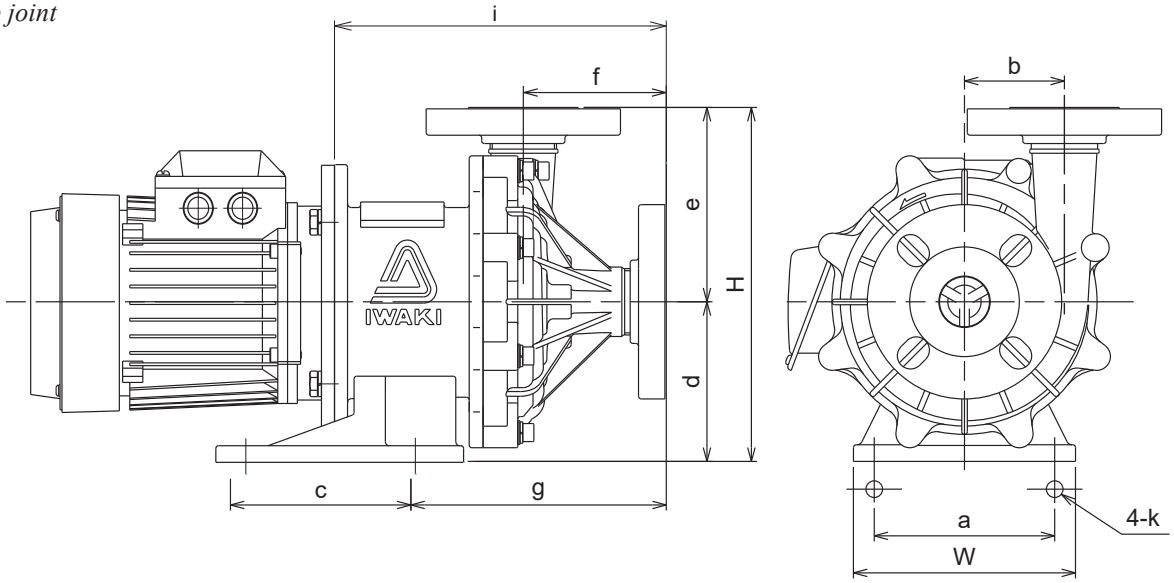

Model	W	H	a	b	c	d	e	f	g	k	i
MX-F250	160	255	130	65	130	115	140	90	163	12	221
MX-F251	160	255	130	65	130	115	140	90	163	12	233
MX-F400	140	225	110	54	98	95	130	87	150	12	221
MX-F401	160	255	130	72	130	115	140	103	184	12	246
MX-F402/-F403	260	280	208	80	200	120	160	89	157	14×36	241

NOTE: Actual dimensions may differ from the above information depending on model identification codes.

6. Part names

MX-F250/-F251 & /-F401

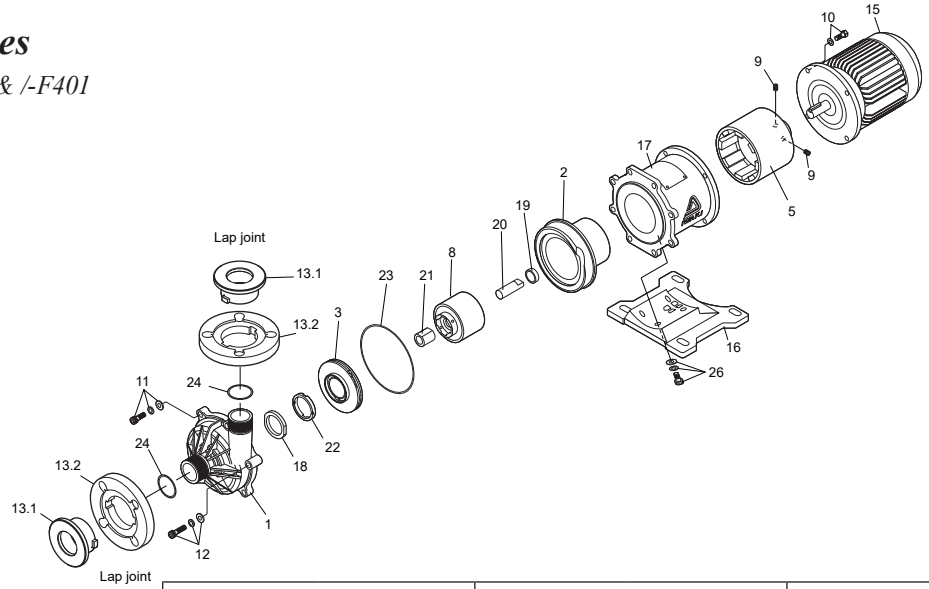

			MX-F250		MX-F251		MX-F401	
No.	Names	Q'ty	Materials	Remarks	Materials	Remarks	Materials	Remarks
1	Front casing	1	CFRETFE		CFRETFE		CFRETFE	
2	Rear casing	1	CFRETFE		CFRETFE		CFRETFE	
3	Impeller	1	CFRETFE		CFRETFE		CFRETFE	
5	Drive magnet unit	1	Ferrite mag. + Aluminium alloy		Ferrite mag. +FCD450		Ferrite mag. +FCD450	
8	Magnet capsule	1	Ferrite mag. +CFRETFE		Ferrite mag. +CFRETFE		Ferrite mag. +CFRETFE	
9	Hex socket set screw	2	Steel	M8 × 10	Steel	M8 × 10	Steel	M8 × 10
10	Hex soch head bolt	4	Stainless steel	M8 × 20, with SW	Stainless steel	M10 × 25, with SW	Stainless steel	M10 × 25, with SW
11	Hex soch head bolt	6	Stainless steel	M8 × 35, with PW, SW	Stainless steel	M8 × 35, with PW, SW	Stainless steel	M8 × 40, with PW, SW
12	Hex soch head bolt	2	Stainless steel	M8 × 50, with PW, SW	Stainless steel	M8 × 50, with PW, SW	Stainless steel	M8 × 50, with PW, SW
13.1	Flange inner	2	CFRETFE		CFRETFE		CFRETFE	
13.2	Flange outer	2	GFRPP		GFRPP		GFRPP	
15	Motor	1	0.4kW, 2P, 3-phase		0.75kW, 2P, 3-phase		0.75kW, 2P, 3-phase	
16	Base	1	GFRPP		GFRPP		GFRPP	
17	Adapter	1	FC200		FC200		FC200	

No.	Names	Q'ty	Materials			MX-F250/-F251	MX-F401
			CFV/CFE	RFV/RFE	KKV/KKE	Remarks	Remarks
18	Liner ring	1	High purity alumina ceramic		SiC		
19	Rear thrust	1	CFRETFE				
20	Spindle	1	High purity alumina ceramic		SiC		
21	Bearing	1	High density carbon	PTFE (with filler)	SiC		
22	Mouth ring	1	PTFE (with filler)		SiC		
23	O ring	1	V: FKM E: EPDM			JIS B 2401 G165	JIS B 2401 G165
24	O ring (lap joint)	2	V: FKM E: EPDM			JIS B 2401 G30	AS568-129
26	Hex soch head bolt	4	Steel			M8 × 20, with PW, SW	M8 × 20, with PW, SW

*The flange inner (#13.1), the flange outer (#13.2) and the O ring (#24) are provided for the lap joint connection only.

MX-F400

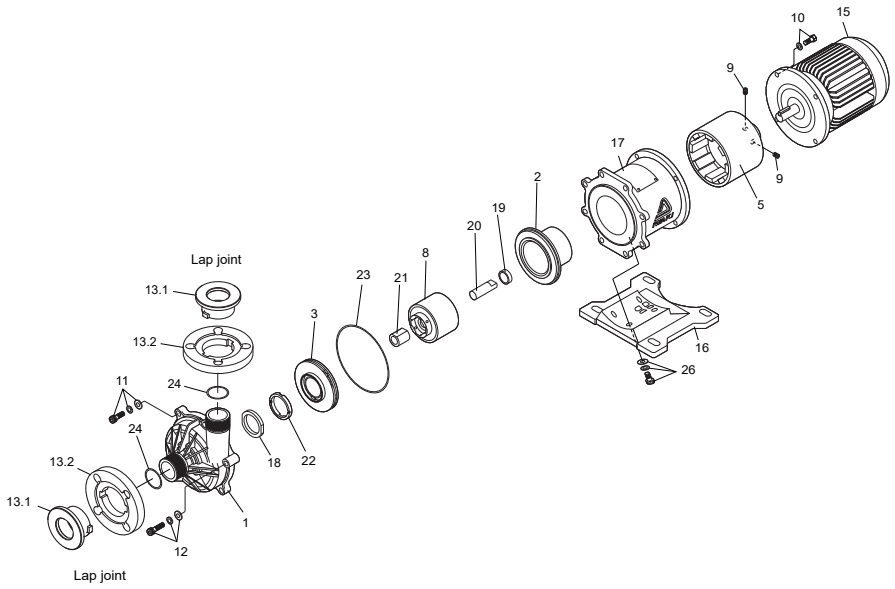

No.	Names	Q'ty	Materials	Remarks	No.	Names	Q'ty	Materials			Remarks
								CFV/CFE	RFV/RFE	KKV/KKE	
1	Front casing	1	CFRETFE		18	Liner ring	1	High purity alumina ceramic		SiC	
2	Rear casing	1	CFRETFE		19	Rear thrust	1	CFRETFE			
3	Impeller	1	CFRETFE								
5	Drive magnet unit	1	Ferrite magnet + Aluminium alloy		20	Spindle	1	High purity alumina ceramic			
8	Magnet cap-sule	1	Ferrite magnet + CFRETFE		21	Bearing	1	High density carbon	PTFE (with filler)	SiC	
9	Hex socket set screw	2	Steel	M8 × 10	22	Mouth ring	1	PTFE (with filler)			
10	Hex soch head bolt	4	Stainless steel	M8 × 20, with SW	23	O ring	1	V: FKM E: EPDM			JIS B 2401 G135
11	Hex soch head bolt	4	Stainless steel	M8 × 30, with PW, SW	24	O ring	2				AS568-129
12	Hex soch head bolt	2	Stainless steel	M8 × 40, with PW, SW	26	Hex soch head bolt	4	Steel			M8 × 20, with PW, SW
13.1	Flange inner	2	CFRETFE								
13.2	Flange outer	2	GFRPP								
15	Motor	1	0.4kW, 2P, 3-phase								
16	Base	1	GFRPP								
17	Adapter	1	FC 200								

*The flange inner (#13.1), the flange outer (#13.2) and the O ring (#24) are provided for the lap joint connection only.

Outline

MX-F402/-F403

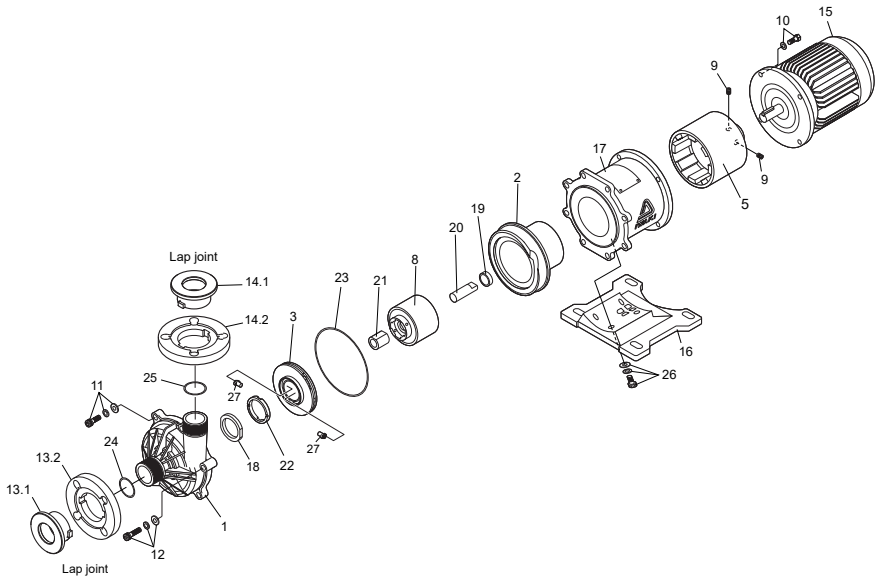

No.	Names	Q'ty	Materials	Remarks	No.	Names	Q'ty	Materials			Remarks
								CFV/CFE	RFV/RFE	KKV/KKE	
1	Front casing	1	CFRETFE		15	Motor	1	1.5/2.2kW, 2P, 3-phase			
2	Rear casing	1	CFRETFE		16	Base	1	GFRPP			
3	Impeller	1	CFRETFE		17	Adapter	1	FC200			
5	Drive magnet unit	1	Rear earth magnet +FCD450		18	Liner ring	1	High purity alumina ceramic		SiC	
8	Magnet cap-sule	1	Rear earth magnet +CFRETFE		19	Rear thrust	1	CFRETFE			
9	Hex socket set screw	2	Steel	M8 × 10	20	Spindle	1	High purity alumina ceramic		SiC	
10	Hex head bolt	4	Stainless steel	M10 × 30	21	Bearing	1	High density carbon	PTFE (with filler)		
	Spring washer			M10	22	Mouth ring	1	PTFE (with filler)			
11	Hex soch head bolt	7		M10 × 55	23	O ring	1	V: FKM E: EPDM			JIS B 2401 G195
	Plain washer			M10	24	O ring	1				AS568-136
	Spring washer			M10	25	O ring	1				AS568-129
12	Hex soch head bolt	1		M10 × 60	26	Hex soch head bolt	4	Steel			M8 × 20, with PW, SW
	Plain washer			M10	27	Lock pin	2	CFRETFE			
	Spring washer			M10							
13.1	Flange inner	1	CFRETFE								
13.2	Flange outer	1	GFRPP								
14.1	Flange inner	1	CFRETFE								
14.2	Flange outer	1	GFRPP								

*The flange inner (#13.1), the flange outer (#13.2), the flange inner (#14.1), the flange outer(#14.2) and the O ring (#24 and #25) are provided for the lap joint connection only.

7. Overview

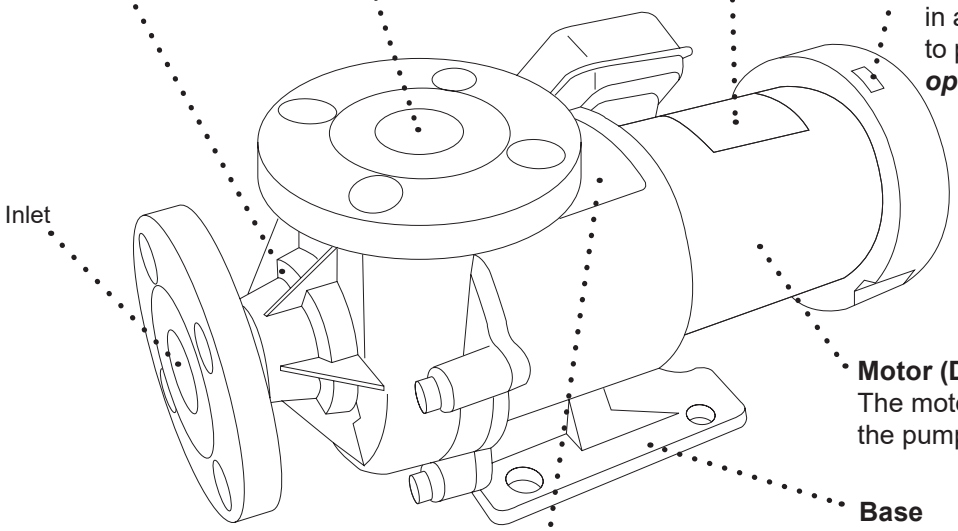

⚠CAUTION

Wet a cloth with tap water and wring it out for cleaning the pump. Use a neutral detergent for greasy dirt and then rub with a dry cloth. Do not wipe nameplates, labels or pump body with any solvent.

Installation

1. Before installation ····· 15

2. Installation/Pipework/Wiring ····· 17

Installation

⚠CAUTION

- **Do not run pump dry**
  Do not run pump dry (operation without priming water or with a suction valve closed). Internal parts are excessively worn by friction heat and fatal pump damage results.
  *If the pump runs dry by mistake, turn off power and leave it for more than one hour to cool it down. Quick cooling can give rise to cracks on parts.
  *An Iwaki DRN pump protector is recommended for the prevention of dry running.



- **Do not bring the pump close to a flammable substance**
  Keep the pump away from a flammable substance for the prevention of fire.



- **Do not remodel the pump**
  A remodelled pump will not be warranted. Also, we are not responsible for personal injury or property damage due to any modification.



1. Before installation

Always observe the following points.

■ Precautions for starting/stopping the pump (In case the pump is in flooded suction system.)

Follow the procedures below when starting/stopping the pump for the prevention of water hammer.
Take extra care when a discharge line is long.

When starting the pump

First, prime the pump. Then turn on power to start operation with a discharge valve fully closed.
And then gradually open the valve and adjust a flow rate to a specified point.

When stopping the pump

Gradually close a discharge valve. Turn off power and stop the pump after the valve is fully closed.

NOTE: Do not close a discharge valve sharply. Otherwise an excessive pressure may damage the pump, when using a solenoid valve, set it to close slowly.

■ Do not install or store the pump:

- Where ambient temperature can exceed 40 ºC or falls below 0 ºC.
- Where ambient humidity can exceed 85%RH or falls below 35%RH.
- In a corrosive/explosive environment (except explosion-proof type).
- In direct sunlight or wind & rain (except outdoor-use type).
- Under mechanical vibration.

Installation

■ Always prime the pump

The MX-F is not a self-priming pump. Prime the pump every time the pump is operated. Do not run pump dry (operation without liquid.), or internal parts seizing or excessive wear results.

■ Maximum operating pressure

Do not allow a discharge pressure to exceed the limits below.

Model	MX-F250	MX-F251	MX-F400	MX-F401	MX-F402/-F403
Pressure limits (MPa)	0.25	0.33	0.22	0.28	0.43

■ Liquid conditions

Slurry

The MX-F series can not send slurry except the KK type with a SiC bearing and a SiC spindle.
The KK type can handle slurry up to 5% (concentration), 50μm (particle size) and 80Hs (hardness).
Contact us for details.

Performance change

Shaft power, discharge capacity and pump head vary depending on specific gravity and viscosity. The pump is designed for a specified liquid. If you made a change to the liquid property, contact us.

Temperature change

Viscosity, vapour pressure and corrosive nature vary with liquid temperature. Always take account of temperature change.

►Allowable liquid temperatrue: 0-80°C (clean water)
►Allowable ambient temperature: 0-40°C
►Allowable ambient humidity: 35-85%RH

NOTE: Contact us for the allowable liquid temperature range at each liquid type.

■ Intermittent operation

Frequent ON-OFF operation damages the pump in a short time. Do not make ON-OFF operation more than six times per hour.

■ Disconnection of magnet coupling

Stop the pump immediately when the magnet coupling is disconnected. Otherwise magnetic force reduces.

■ Ascending area of a spike curve (in a performance curve)

When a specified point falls on an ascending area of a spike curve (generally, a flow is small in this area. See the standard performance curves), check and observe the following points.

- There should be no possibility of trapping air in a supply tank or a discharge line.
- A discharge valve should be installed near the pump outlet to adjust a flow rate.

2. Installation/ Pipework/ Wiring

If you notice any abnormal or dangerous conditions, suspend operation immediately and inspect/ solve problems.

⚠WARNING

- **Turn off power before work**

  Be sure to turn off power to stop the pump and related devices before work. Make sure no one turns on power by mistake while working on the pump, otherwise it may result in a serious accident. If your working area is noisy or dark, let other people know about the situation by displaying a notice such as "POWER OFF (Maintenance)" near a power switch.


Turning off power

- **Do not lift the pump by gripping any plastic parts (pump unit, flange or base)**

  The pump can drop unintentionally as a plastic part breaks, resulting in serious injury.


Requirement

- **Electrical wiring**

  Electrical work should be performed by a qualified electrician. Otherwise, personal injury or property damage may result..


Caution

■ Carrying in and out

When carrying in and out the pump, observe the following points.

- Do not lift the pump by holding plastic parts such as a pump unit, a flange or a base.
- Pump weight is about 34kg (the largest model). Work with sufficient number of people.
- Mount the pump horizontally on a pump base.

■ Installation

Arrange pump and pipework based on the following piping layout for a long period of operation.

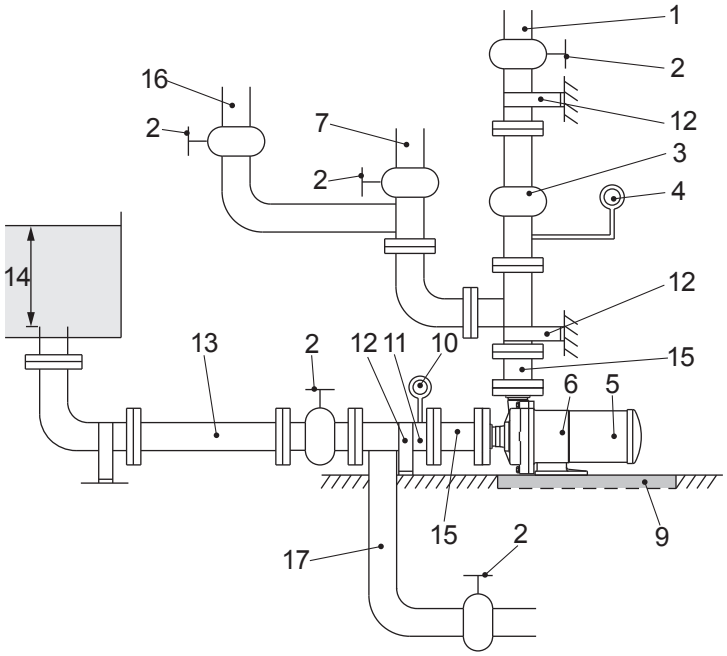

1. Discharge pipe
   (Support pipework to keep the pump free of piping weigh.)
2. Gate valve
3. Check valve
4. Pressure gauge
5. Motor
6. Pump
7. Air vent/ priming line
9. Drain ditch
10. Vacuum gauge
11. Suction pipe (Pipe diameter: D)
    (Horizontal sections should be shortest and laid on a rising gradient of 1/100 toward the pump)
12. Pipe support
13. Suction pipe (Pipe diameter: D)
14. 2D or 500mm or more
15. Expansion joint
16. Flushing line (Discharge side)
17. Flushing line (Suction side)

Installation location

- Install the pump as close to a supply tank. Keep a liquid level in the tank higher than the pump at any time (flooded suction application).
- In case the pump is installed above a liquid level (suction lift application), lay on a priming line and mount a foot valve to the bottom of a suction line.

NOTE: The maximum suction lift varies with liquid characteristics, specific gravity, liquid temperature and suction line length. Contact us for detail.

Outdoor use motors (Indoor use motors can not be installed out of doors)

Outdoor use motors can also be used in doors. Protect the motor and electrical power distribution equipment from possible damage due to an accidental outflow or act of providence.

Installation space

- Select a level location, free from vibration, that won't hold liquid.
- Allow sufficient space around the pump for easy access and maintenance.

⚠CAUTION
Fix the pump firmly. Support piping so as not to directory weigh on the pump.

■ Foundation work

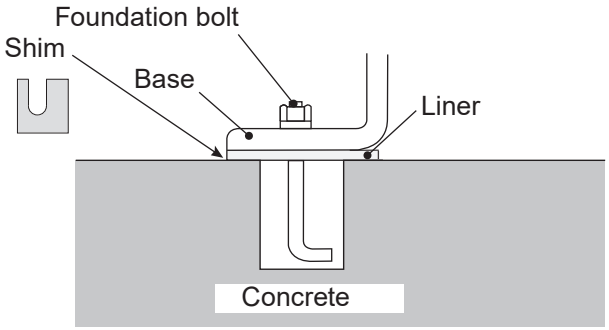

- *Installation area should be larger than the footprint of the pump. Or a plastic base may break due to a concentrated load.*
- *If piping vibrates sympathetically with the pump in operation, provide an expansion joint between the pump and the piping to reduce vibration.*

■ Tightening torque between the pump and pipework

Connect the pump to pipework via inlet and outlet flanges according to the tightening torque below. The table is based on use of metal pipe flanges with rubber gaskets. Tighten bolts diagonally at even torque.

Model	Bolt size	Tightening torque
MX-F250/-F251/-F400/-F401/-F402/-F403	M16	20N•m

■ Piping load and momentum

Try not to apply a heavy load to the inlet and outlet flanges. Permissible piping weight and moment to the pump are as below.

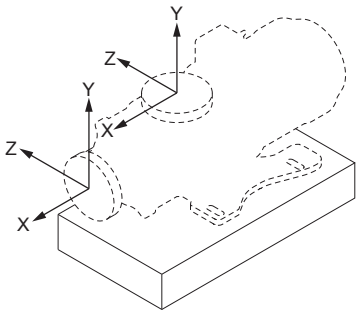

Permissible stress to outlet flange

	Pipe dia. (mm)	
	25	40
	Load	
Load direction	kN	
Fx	0.10	0.15
Fy: compression	0.15	0.20
Fy: tension	0.10	0.10
Fz	0.10	0.15

Permissible stress to inlet flange

	Pipe dia. (mm)	
	25	40,50
	Load	
Load direction	kN	
Fx	0.10	0.10
Fy	0.10	0.15
Fz	0.10	0.15

Permissible moment to outlet flange

	Pipe dia. (mm)	
	25	40
	Moment	
Load direction	kN·m	
Mx	0.02	0.05
My	0.05	0.10
Mz	0.05	0.10

Permissible moment to inlet flange

	Pipe dia. (mm)	
	25	40, 50
	Moment	
Load direction	kN·m	
Mx	0.05	0.10
My	0.02	0.05
Mz	0.05	0.10

■ Suction line

1. Always build up a flooded suction system. Have a suction line shortest with the minimum number of bends. Support piping by pipe supports so that the pump is not subject to piping weight or thermal stress.

2. Make sure joints on a suction line are secure and air doesn't come in. If air is entrained into a suction line, liquid may not be pumped or the pump may break at its worst.

3. When the inner pressure of a supply tank is negative, or a suction lift or a suction line is long, apply the following formula.

NPSHa>NPSHr+0.5m (See the standard performance curve for NPSHr.)

4. If a bent pipe is installed in a suction line, lay a straight line (length: 500mm or longer, or 8 times longer than the inlet I.D. of the pump) between a pump inlet and the bent pipe. Also, have the curvature radius of the bent pipe largest.

5. Do not allow any arched line where air may be trapped. A suction line should be laid on a rising gradient of 1/100 toward the pump.

6. If the inlet I.D. of the pump is different from that of a suction pipe, use an eccentric reducer pipe. Upper side should always be level. Air may be trapped if it is mounted upside down.

7. In flooded suction, install a gate valve on a suction line for easier overhaul & inspection. Keep this valve open at any time during operation.

8. Install a flushing line for cleaning the pump after handling a harmful liquid.

9. A suction pipe I.D. should be equal to or larger than a pump inlet I.D.

Suction lift application

10. One end of a suction line should always be at least 500 mm lower than a liquid level in a supply tank for the prevention of air ingress.

11. Provide a screen in a supply tank for the prevention of foreign matter interfusion (Clean the screen periodically.). The distance between the end of a suction line and the bottom of a suction tank should be 1.5 times wider than a suction line I.D.

12. Be sure to install a foot valve at one end of a suction line.

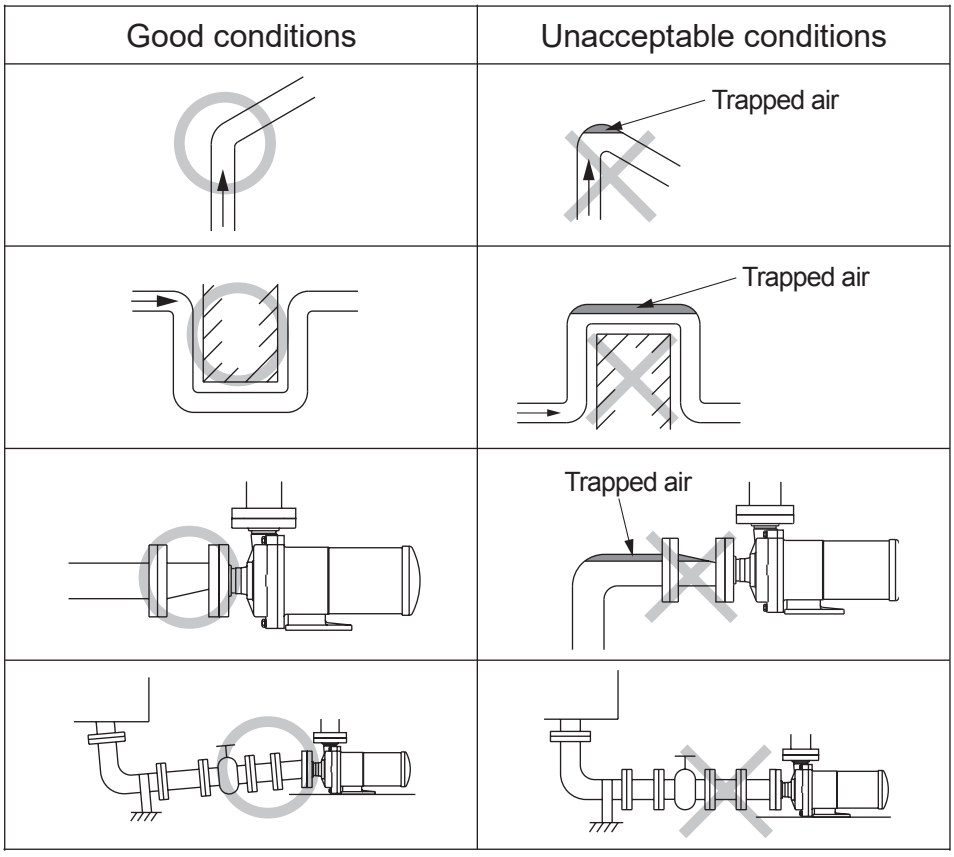

Installation

■ Discharge line

1. Support discharge piping so as not to directory weigh on the pump.

2. Lay a priming line when the pump is not under a flooded suction system.

3. Pipe resistance rises too high to obtain an intended flow if a discharge pipe I.D. is too long. Always take account of the increment of pipe resistance.

4. Install a check valve in the following cases.

When selecting a check valve, check its maximum operating pressure to make sure it tolerates a possible pressure rise due to water hammer or backflow.

- A discharge line is too long.
- Actual discharge head (static discharge head plus discharge pipe resistance) is more than 15m.
- The end of a discharge line is 9m higher than a liquid level in a supply tank.
- Several pumps are running in parallel.

5. Install a gate valve on a discharge line to adjust a flow rate and to protect a motor from overload. If you are to install a check valve as necessary, it should be mounted in between the pump and the gate valve.

6. Install a pressure gauge on a discharge line.

7. Install an air vent line when a discharge line is laid long in a horizontal direction.

8. Drain

Install a drain valve if there is the risk of liquid freezing in the discharge line.

■ Wiring

Electrical wiring and any work on power source must be performed by qualified persons only. It is not the manufacturer's responsibility for any injury and damage due to noncompliance with this notice. Contact us as necessary.

1. Install an electromagnetic switch according to motor specifications (voltage, capacity, etc.).

2. Electromagnetic switches and push buttons should be installed away from the pump.

3. If the pump is used out of doors, protect switches from rainwater.

Operation

1. Operational precautions 24

2. Before operation 25

3. Operation 25

Operation

1. Operational precautions

⚠ CAUTION


Prohibited

- Never run pump dry or shut off a suction valve during operation. Otherwise the pump fails in a short period.



- Check the rotational direction of the pump. Clockwise seen from the motor end is a correct direction. Operation in a reverse direction may cause pump damage.



- Stop the pump immediately when it is running under cavitation. Do not continue to run the pump when air is sucked from a suction line.



- Stop the pump immediately when the magnet coupling is disconnected. Magnetic force reduces if the pump keeps on running for more than one minute in this condition.



- Keep liquid temperature change within 80˚C at any time during operation or stop.



- Start the pump with a discharge valve fully closed in order to avoid water hammer.


Caution

- Closed-discharge operation should be within one minute. If the pump runs with a discharge valve closed for a long time, the liquid temperature inside the pump rises and damages the pump.



- If power is interrupted while the pump is running, switch off the pump immediately and close a discharge valve.


Caution

- Take extra care for a discharge pressure not to exceed the pump limit. See page 16 for the maximum operating pressure at each model.



- The surface temperature of the pump or pipe rises high along with liquid temperature in or right after operation. Take preventive measures.

Model	Liquid temperature	Surface temperature (at ambient 40°C)
MX-F250/-F251/-F400/-F401/-F402/-F403	80°C	80°C

- Noise level

Model	MX-F250/-F400	MX-F251/-F401	MX-F402/-F403
Noise level	70dB	75dB	80dB



In case the pump noise affects human health or communication to secure a safety, provide a noise reduction cover. Be careful not to reduce cooling effect by a motor fan.

2. Before operation

Take the next steps to start the pump at the first operation or after a long period of storage.

1. Clean the inside of piping and a supply tank.
2. Retighten flange fixing bolts and base fixing bolts.
3. Prime the pump and shut off a discharge valve. Check an air vent line and a flushing line are closed.
4. Run the motor for a moment (within a second) in order to check if the motor rotates to the direction pointed by an arrow label (clockwise seen from a motor fan). If the motor rotates in reverse, interchange two of three phase wires at random.

3. Operation

■ Starting process

Operate the pump by the following procedure.

	Operation procedure	Remarks
1	• Close or open valves.	• Open suction valves fully. • Open discharge valves fully.
2	• Prime the pump.	• Prime the pump unit and then close a discharge valve.
3	• Check the motor for correct rotating direction. Turn on power and then immediately (within one second) switch off the power.	• Supply power to run the pump only for checking a rotational direction. (The correct direction is indicated with an arrow on the motor.) • Check if the motor fan smoothly stops after the power is turned off. **⚠CAUTION** ● The pump can be damaged when running in reverse rotation for a long time. ● If the motor fan does not stop smoothly, internal parts may contact each other. Check the inside of the pump.
4	• Turn on power and start the pump to adjust discharge pressure and capacity. Observer the minimum discharge capacity. See below.	• Run the pump with a discharge valve closed. Once a pressure gauge points the max discharge pressure, open the discharge valve gradually to obtain a specified discharge pressure (or discharge capacity). NOTE: Start to open/close a discharge valve gradually to adjust discharge pressure within one minute after the pump starts to run. Always check a discharge pressure gauge (or adjust discharge capacity by checking a flow meter). **⚠CAUTION** Opening a valve sharply, the motor may be overloaded. Always open a valve while checking ammeters.

	Operation procedure	Remarks
4	Do not operate the pump below the minimum discharge capacity. ►The minimum discharge capacity: 10L/min (MX-F250/-F251/-F400/-F401), 20L/min (MX-F402/-F403) • Observe the minimum discharge capacity for the prevention of continuous closed-discharge operation. This rule holds true to not only manual operation but also automatic operation. **⚠CAUTION** Do not run the pump longer than one minute with a discharge valve fully closed.	
5	<Points to be checked> Check a flow meter and confirm that pump operation is as per specifications during operation.	• If a flow meter is not available, calculate a flow rate from discharge pressure, suction pressure and current value, taking account of pipe resistance.

⚠CAUTION

In case of trouble, turn off power immediately and solve problems. See the "***1. Troubleshooting***" section.

■ Stopping process

	Operation Procedure	Remarks
1	• Close a discharge valve gradually.	• Do not close a discharge valve sharply whether manually or automatically. Otherwise, the pump may be damaged by water hammer action which tends to occur with a long a discharge line. When using a solenoid valve, set it to close slowly.
2	• Turn off power and stop pump operation.	• Check that the motor stops slowly and smoothly. If it does not stop smoothly, inspect the inside of the pump.
3	<Leaving the pump stop> • Liquid in the pump may freeze and consequently damage the pump in winter. Drain liquid before storage. When draining harmful liquid, be sure to flush the inside of the pump and piping afterwards. • Use a heater to prevent liquid from freezing when the pump is temporarily stopped in an extremely cold region. • In the event of a power failure, turn off power and close a discharge valve.	

Maintenance

1. Troubleshooting 28

2. Maintenance & Inspection..... 29

3. Spare & Wear parts 31

4. Disassembly & Assembly..... 34

1. Troubleshooting

If you can not find out the root cause of failure, contact us.

Troubles	Symptom		Cause	Point to be checked & Countermeasures
	When a discharge valve is closed.	When a discharge valve is opened.		
Liquid can not be discharged.		The readings of pressure/vacuum gauges drop to zero.	• Priming liquid level is too low. • Dry running	• Stop and prime the pump and resume operation.
	The pump can not be primed.		• A foot valve doesn't close due to foreign matter clogging.	• Clean the foot valve and a seat.
	After starting, pressure drops sharply as a discharge valve is opened.	The readings of pressure/vacuum gauges fluctuate and drop to zero.	• Air ingress through a suction line or a sealing surface.	• Check if suction line connections are completely sealed. • Check if liquid level in supply tank is not too low.
			• A disconnection of the magnet coupling	• Check amperage to see if the motor is not overloaded. • Check if foreign matters do not lock the impeller or magnet capsule. • Check if voltage is normal.
	Discharge pressure does not rise.		• Low pump speed • The pump rotates in reverse.	• Check wiring or motor. • Correct wiring.
Discharge capacity is too low.	Pressure & vacuum are normal.	Vacuum is high.	• The strainer is clogged with foreign matters.	• Remove foreign matters.
		Vacuum is very high.	• Air pocket in suction line	• Check and correct suction line.
			• Foreign matters are clogged at impeller inlet.	• Remove foreign matters.
		The readings of pressure gauge & vacuum gauge fluctuate.	• Air ingress from a suction line or a sealing surface.	• Check suction line connections and retighten as necessary.
			• Discharge line clogs with foreign matters.	• Remove foreign matters or scale from pump/piping.
		Vacuum is high but pressure is normal.	• Resistance such as air pocket in suction line.	• Check if there is no arched pipework.
		Vacuum is normal but pressure is high.	• Actual head is too high or pipe resistance is too large.	• Check actual head and pipe resistance.
	Pressure is low and vacuum is very low.	Pressure and vacuum are low.	• Motor rotates in reverse.	• Interchange motor wiring.
Motor is overheated.			• Power voltage is low. • Overload	• Check voltage or frequency. • Check specific gravity and viscosity of liquid. • Keep good ventilation.
Discharge capacity is rapidly reduced.		Vacuum is high.	• A suction line clogs with foreign matters.	• Remove foreign matters.
Pump vibrates.			• Poor foundation • Loose mounting bolts. • Cavitation occurs. • Pump bearing is worn or melted. • Magnet capsule or spindle is broken. • Dynamic balance of drive magnet is upset. • The rotating part hits against other parts. • Motor bearing is worn.	• Reinstall the pump. • Retighten the bolts. • Remove the cause of cavitation. • Replace as necessary. • Replace as necessary. • Remove the cause. Replace as necessary. • Replace as necessary. • Replace bearing or motor.

2. Maintenance & Inspection

⚠ WARNING

● Access limitation

The magnet drive pump has a pair of strong magnets. The strong magnet field could adversely affect the persons who are assisted by electronic devices such as the pacemaker.


Prohibited

● Turn off power before service

Risk of electrical shock. Be sure to turn off power to stop the pump and related devices before service is performed.


Turning off power

● Wear protective clothing

Always wear protective clothing such as an eye protection, chemical resistant gloves, a mask and a face shield during disassembly, assembly or maintenance work. The specific solution will dictate the degree of protection. Refer to SDS precautions from the solution supplier.


Wear protection

⚠ CAUTION

● Do not catch the finger

Magnetic force of the pump is powerful. Take care not to catch the finger in the adapter.


Caution

■ Daily inspection

1. Always check for leakage before pump operation. Do not run the pump when liquid leaks.
2. Check whether the pump runs without abnormal noise or vibration.
3. Check a liquid level in a supply tank and a suction pressure.
4. Check that discharge capacity and a motor current value are as per specifications on the nameplate during operation.

NOTE: A discharge pressure is in proportion to the specific gravity of liquid. The cock of a pressure gauge or a vacuum gauge should be opened only when measurement is carried out. Close it right after measurement. If the cock remains open during pump operation, its meter mechanism may be adversely affected by the abnormal pressure rise caused by water hammer action.

5. If a spare pump is stored, run it from time to time to keep it ready for operation at any time when needed.
6. Check discharge pressure, discharge capacity, and motor power supply voltage to see if they do not fluctuate during pump operation. See the "1. Troubleshooting" section as necessary.

Maintenance

■ Periodic inspection

To ensure efficient and smooth operation, perform periodic inspection. Be careful not to damage internal sliding parts and plastic parts when the pump is disassembled.

The magnetic force of a drive and a driven magnet is strong. Be careful not to catch the finger. Do not put electrical devices such as a watch and a mag card close to those magnets.

Interval	Part names	Inspection items	Measures
Every six months (Maintain an inspection record)	(Drive magnet unit) Drive magnet Hex. socket set screw	● Wear trace ● If the drive magnet is correctly mounted by hex. socket set screws and they are not loose. ● Decentering of magnet and motor shaft (Max.1/10mm)	○ Finding wear trace, contact us. ○ Reset the drive magnet to the motor shaft and retighten the screws. ○ Retighten the hex. socket set screws or replace the drive magnet (Contact us).
	Rear casing Rear thrust	● Wear tracks on an inner surface ● Cracks ● Wear of the rear thrust ● Contamination in rear casing	○ Contact us. ○ Replace as necessary. ○ Contact us. ○ Remove contamination.
	(Magnet capsule unit) Magnet capsule Bearing	● Wear tracks on the rear end or side face of the magnet capsule ● Cracks on the rear end or side face of the magnet capsule ● Wear of the bearing ● Loose fit of the impeller unit	○ Contact us. ○ Contact us. ○ Replace as necessary. ○ Replace or contact us.
	(Impeller unit) Impeller Mouth ring	● Wear of the mouth ring ● Cracks ● Contamination in the impeller ● Impeller deformation	○ Replace as necessary. ○ Replace as necessary. ○ Remove contamination. ○ Replace as necessary.
	Front case Rear case Liner ring	● Contamination ● Cracks ● Wear, cracks and wear tracks on a liner ring ● Swelling or a crack on O ring ● Wear tracks on an unlikely portion	○ Remove contamination. ○ Replace as necessary. ○ Contact us. ○ Replace as necessary. ○ Contact us.
	Spindle	● Cracks ● Wear degree	○ Replace as necessary. ○ Replace as necessary.

■ Wear limits of bearing and spindle

Check wear degree of the bearing and spindle.

Model	MX-F250/-F251/-F400/-F401		MX-F402/-F403	
	Before use	Wear limit	Before use	Wear limit
Bearing inner diameter	18	19	24	25
Spindle outer diameter	18	17	24	23

1. Above values show wear limit of the bearing and spindle.

2. If the clearance between the bearing and the spindle exceeds 1 mm, either of them, whichever has greater wear, should be replaced regardless of the wear limit. For SiC/SiC (KK) type, replace the bearing and spindle at the same time.

3. Sliding parts may suffer initial wear in an initial operation phase but this is not abnormal.

■ Wear limit of mouth ring

Check wear degree of the mouth ring.

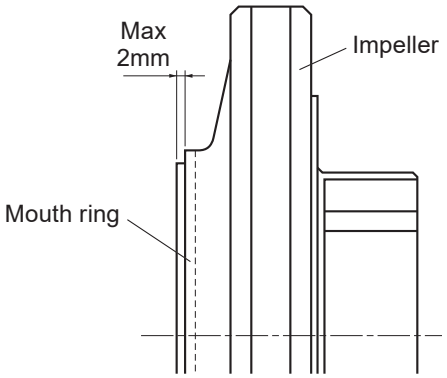

Model	Mouth ring thickness	
	Initial thickness	Wear limit
MX-F250/-F251/-F400/-F401/-F402/-F403	8mm	6mm

NOTE: The mouth ring is 2 mm (3m for F250 and F251 types) forward from the impeller when shipped. Before the step has reduced to 0 mm, replace the impeller unit.

3. Spare & Wear parts

Appropriate spare parts are necessary for a long period of continuous operation. We recommend that wear parts be always in stock. Place an order for spares with the following information.

1. Part names and part number (See the diagram below.)
2. Pump model identification code and manufacturing number (See pump nameplate.)
3. Drawing number if you have our approval drawing

■ MX-F250/-F251/-F400/-F401 spare parts list

No.	Part name		MX-F250	MX-F251	MX-F400	MX-F401
1+18	Front casing unit (No code)	F	MX0417		MX1093	MX0926
		K	MX0418		MX1094	MX0927
	Front casing unit (L/LM)	F	MX1087		MX1093	MX0926
		K	MX1088		MX1094	MX0927
2	Rear casing		MX0419		MX0431	MX0438
3+22	Impeller unit T 50Hz	R	MX0420	MX0831	MX0432	MX0439
		K	MX0421	MX0836	MX0433	MX0440
	Impeller unit T2 50Hz	R	-	-	MX0987	MX0989
	Impeller unit V 50Hz	R	MX0687	MX0832	MX0699	MX0710
		K	MX0691	MX0837	MX0702	MX0714
	Impeller unit W 50Hz	R	MX0688	MX0833	MX0479	MX0711
		K	MX0692	MX0838	MX0703	MX0715
8+21	Magnet capsule unit CF (high density carbon)		MX0424	MX0443	MX0424	MX0443
	Magnet capsule unit RF PTFE (with filler)		MX0425	MX0444	MX0425	MX0444
	Magnet capsule unit KK (SiC)		MX0426	MX0445	MX0426	MX0445
11	Hex socket head bolt (with PW/ SW)		MX0218		MX0241	MX0240
12	Hex socket head bolt (with PW/ SW)		MX0217		MX0235	MX0217
13.1	Flange inner		MX1086		MX1092	
13.2	Flange outer		MX1068		MX1075	
19	Rear thrust		MX0428			
20	Spindle	F	MX0118			
		K	MX0427			
23	O ring (for casing)	V	MX0116		MX0129	MX0116
		E	MX0207		MX0235	MX0207
24	O ring (for lap joint)	V	MX1072		MX0130	
		E	MX1073		MX0233	

Note1: The O ring part numbers above are for FKM and EPDM. Contact us for the Aflas® O ring.

Note2: The maximum duration of the above parts (except #23 and #24 O rings) is about 20,000 hours, however, it is based on the operation with clean water at ambient temperature and can change with liquid properties and temperature. For the #23 and #24 O rings, they should be replaced every time the pump head is opened.

Note3: The #20 spindle, #21 bearing and #22 mouth ring must be replaced when the wear limit has come. Note the whole magnet capsule unit (#8+#21) needs to be changed to the new for the replacement of the bearing, and the whole impeller unit (#3+#22) for the replacement of the mouth ring.

Note4: The front casing unit (#1+#18) and the O ring (#24) are divided into two different types. One is for the flange connection, and the other is for the lap joint connection. These parts are not compatible each other.

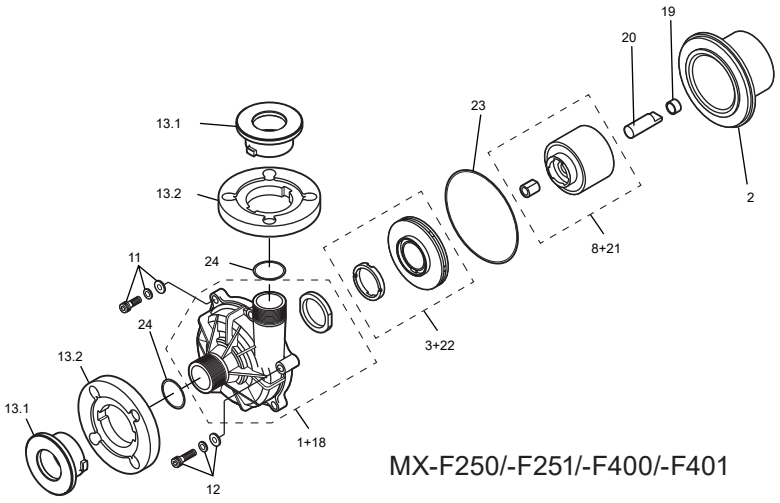

MX-F250/-F251/-F400/-F401

■ MX-F402/-F403 spare parts list

No.	Part name		MX-F402	MX-F403
1+18	Front casing unit (L)	F	MX0932	
		K	MX0933	
2	Rear casing		MX0815	
3+22	Impeller unit T 50Hz	R	MX0449	MX0458
		K	MX0450	MX0459
	Impeller unit V 50Hz	R	MX0722	MX0734
		K	MX0726	MX0738
	Impeller unit W 50Hz	R	MX0723	MX0735
		K	MX0727	MX0739
8+21	Magnet capsule unit CF (high density carbon)		MX0453	MX0462
	Magnet capsule unit RF PTFE (with filler)		MX0454	MX0463
	Magnet capsule unit KK (SiC)		MX0455	MX0464
11	Hex socket head bolt		MX0798	
	Plain washer		MX0314	
	Spring washer		MX0315	
12	Hex socket head bolt		MX0313	
	Plain washer		MX0314	
	Spring washer		MX0315	
13.1	Flange in inner		MX1101	
13.2	Flange in outer		MX1081	
14.1	Flange out inner		MX1092	
14.2	Flange out outer		MX1075	
19	Rear thrust		MX0457	
20	Spindle	F	MX0182	
		K	MX0456	
23	O ring (for casing)	V	MX0180	
		E	MX0302	
24	O ring (for lap joint)	V	MX0181	
		E	MX0300	
25	O ring (for lap joint)	V	MX0130	
		E	MX0233	
27	Lock pin		MX0489	

Note1: The O ring part numbers above are for FKM and EPDM. Contact us for the Aflas® O ring.

Note2: The maximum duration of the above parts (except #23, #24 and #25 O rings) is about 20,000 hours, however, it is based on the operation with clean water at ambient temperature and can change with liquid properties and temperature. For the #23, #24 and #25 O rings, they should be replaced every time the pump head is opened.

Note3: The #20 spindle, #21 bearing and #22 mouth ring must be replaced when the wear limit has come. Note the whole magnet capsule unit (#8+#21) needs to be changed to the new for the replacement of the bearing, and the whole impeller unit (#3+#22) for the replacement of the mouth ring.

Note4: The front casing unit (#1+#18) and the O ring (#24 and #25) are divided into two different types. One is for the flange connection, and the other is for the lap joint connection. These parts are not compatible each other.

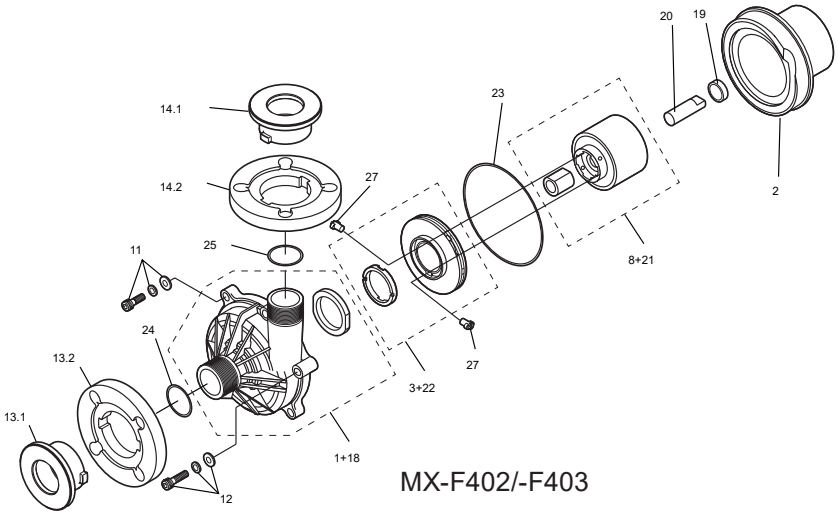

MX-F402/-F403

4. Disassembly & Assembly

⚠ WARNING

● Access limitation

The magnet drive pump has a pair of strong magnets. The strong magnet field could adversely affect the persons who are assisted by electronic devices such as the pacemaker.


Prohibited

● Turn off power before service

Risk of electrical shock. Be sure to turn off power to stop the pump and related devices before service is performed.


Turning off power

● Wear protective clothing

Always wear protective clothing such as an eye protection, chemical resistant gloves, a mask and a face shield during disassembly, assembly or maintenance work. The specific solution will dictate the degree of protection. Refer to SDS precautions from the solution supplier.


Wear protection

⚠ CAUTION

● Do not catch the finger

Magnetic force of the pump is powerful. Take care not to catch the finger in the adapter.


Caution

► Mark each wire so that the wires can be connected correctly to the motor.

► Do not disassemble the pump beyond the extent shown on this manual.

► Make sure to close suction and discharge valves before disassembling/assembling the pump. Clean the inside of the pump as well.

► Magnetic force of the pump is strong. Be careful not to catch the finger in parts. Do not allow iron pieces or powders to stick to a drive and a driven magnet.

► A pair of strong magnets is mounted in the pump and its magnetic force may affect magnetic disks/cards or wrist watches. Do not bring them close to the pump.

► Risk of burning. Pump and pipe surface temperature rise high along with liquid temperature. Do not touch the pump or pipe surface directly in or right after operation.

Tool list

The following tools are necessary to disassemble and assemble the pump.

Tool	MX-F250/-F251/-F400/-F401	MX-F402/-F403	Remarks
Hex. wrench	6mm	4mm, 8mm	1pc/each
Flathead screwdriver	1pc	1pc	
Plastic hammer	1pc	1pc	

■ Disassembly

1. Remove hex. socket head bolts from the front casing and remove it from the adapter. At this time drain and collect residual liquid and decontaminate wet ends.

> ⚠CAUTION
>
> Make sure the pressure is removed from piping or the pump before disconnecting plumbing or disassembly of the pump.

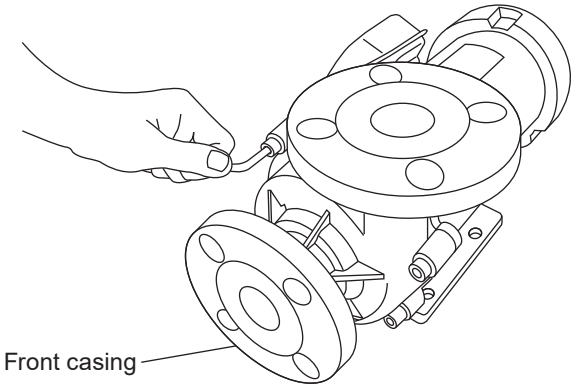

2. Pull out the combination of an impeller unit and a magnet capsule unit. Be careful not to catch the finger in the impeller unit and the adapter.

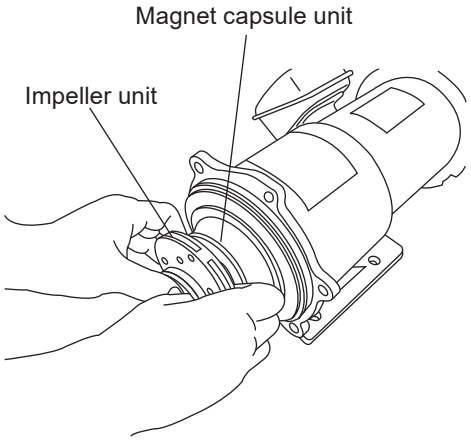

3. Detach the impeller unit from the magnet capsule unit as necessary. Be careful not to damage the units.
   a. MX-F250/-F251/-F400/-F401
      Slightly tap the back of the impeller unit by a plastic hammer while holding the magnet capsule unit.
      If it is hard to remove, warm them in hot water (about 90°C) for five minutes.
      Be careful not to get scalded with hot water.

b. MX-F402/-F403

Turn two lock pins 90 degrees anticlockwise using a flathead screwdriver and then push them off inwards. Tap the end of driver handle if necessary.

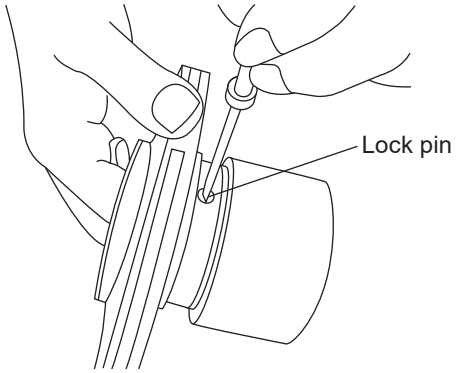

The lock pins can also be turned by using a 4mm hex. wrench from the inner surface of the magnet capsule unit. In this case turn the wrench clockwise. Note the pins will be damaged if they are turned in a reverse direction. After unlocking, push it off from the outside by using a bar.

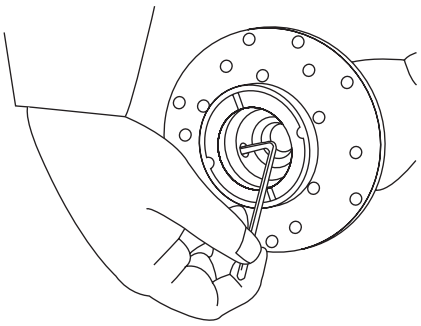

After the lock pins are removed, detach the impeller unit from the magnet capsule unit by slightly tapping the back of the impeller unit with a plastic hammer. If the impeller unit is hardly removed, warm it in hot water (approx. 90°C) for five minutes and tap the back slightly. Be careful not to scald in hot water.

The impeller unit can not be separated from the magnet capsule unit unless the lock pins are removed. Do not use excessive force to remove the impeller unit.

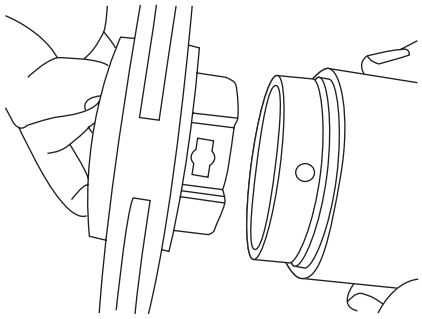

4. Slide the top of a flathead screw driver in between the rear casing and the adapter to pull out the casing. Pay attention not to scratch the O ring surface.

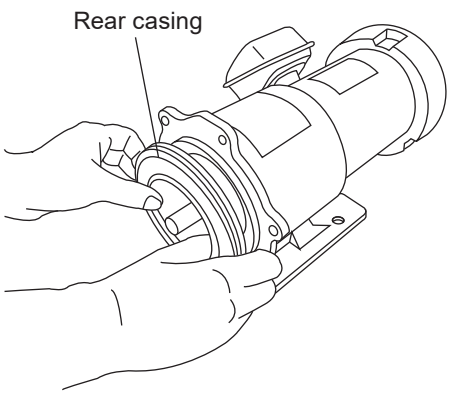

■ Assembly

1. Mount the impeller unit to the magnet capsule unit.

a. MX-F250/-F251/-F400/-F401

Press the impeller unit into the magnet capsule unit as far as it will go, locating the U-shape holes under the through holes.

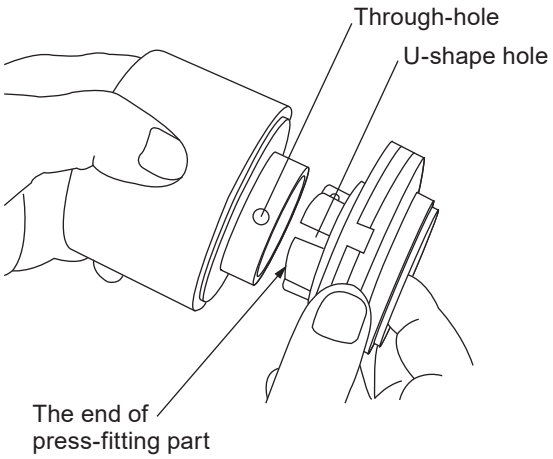

Check that the end of press-fitting parts has come at a bearing surface. If the impeller unit can not be press fitted to the magnet capsule unit, warm the magnet capsule unit in hot water (about 90°C for five minutes) for softening. Be careful not to get scalded with hot water.

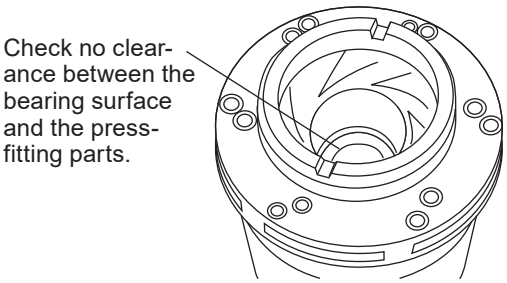

b. MX-F402/-F403

The mating surface on the magnet capsule unit has two hole sizes. Large holes (stepped holes with I.D. 6mm and 12mm) are for the lock pins and the small holes (I.D. 3mm) are for cooling. Press the impeller unit into the magnet capsule as far as it will go, locating the U-shape holes under the smaller holes. If it is hard to combine them, warm the magnet capsule unit in hot water (approx. 90°C) for 5 minutes. Be careful not to scald at this time.

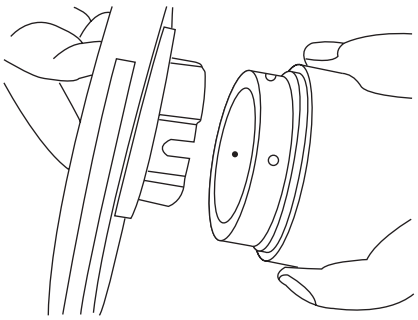

After fitting the impeller unit, insert two lock pins all the way seated in the lock pin holes from an inner surface.

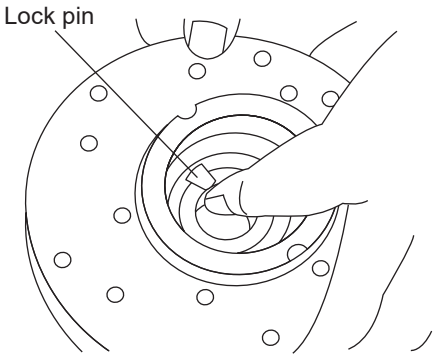

Use a flathead screwdriver to turn the pins 90 degrees clockwise from the outside while holding the pins from the inside. Once it clicks, the impeller unit is secured.

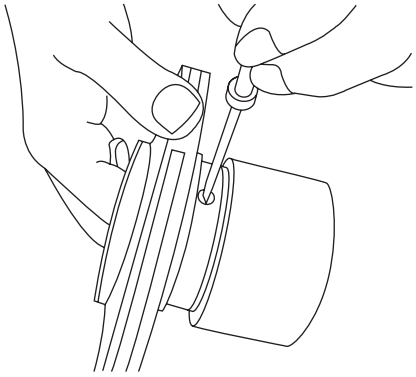

If the screw groove is deformed and can not be used, the pins can be turned from the inner surface with a 4mm hex. wrench. In this case turn the wrench anticlockwise. Note these plastic pins may be broken if it is turned in reverse.

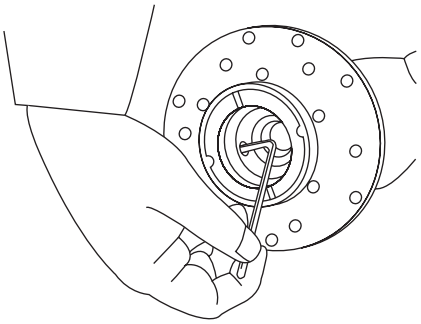

2. Insert the combination of the impeller unit and the magnet capsule unit into the rear casing slowly.
   Do not allow foreign matters such as iron pieces to adhere to the magnet capsule unit.

3. Mount the rear casing with the combined units in it to the adapter.

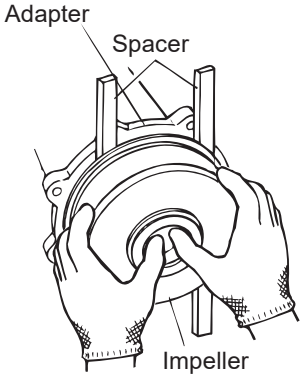

⚠ CAUTION

Magnet force is very powerful. Place plastic or wooden spacers between the rear casing and the adapter so as not to catch the fingers.
Pay extra attention to For F402 and F403 in this point.

4. Fit an O ring to the front casing. Check that sealing surfaces are free of dust or scratches. Make sure that an O ring is in place and will not be out of a groove. Mount the front casing to the rear casing according to a pair of mating parts (except the F400). Note that the F402 and F403 have two pairs of mating parts.

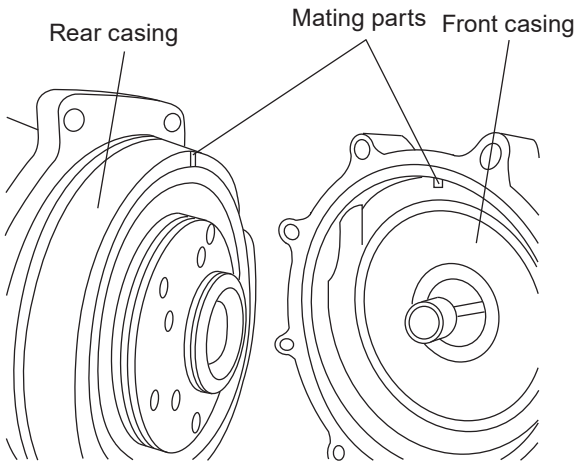

5. Fasten the front casing to the adapter.
   Tighten the hex. socket bolts evenly. Tightening torque is shown below.

Model	Tightening torque
MX-F250/-F251/-F400/-F401	11.8N•m
MX-F402/-F403	14.7N•m

■ Disassembly (lap joint)

1. Turn the combination of the flange inner and outer counter clockwise to detach it from the pump inlet/ outlet.
   *Use a belt wrench if necessary.
   *Locate the triangle on the flange outer to the "U" groove as shown below so that the flange inner can turn along with the outer rim.

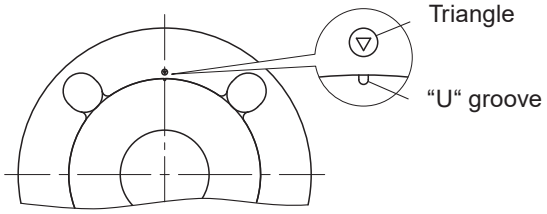

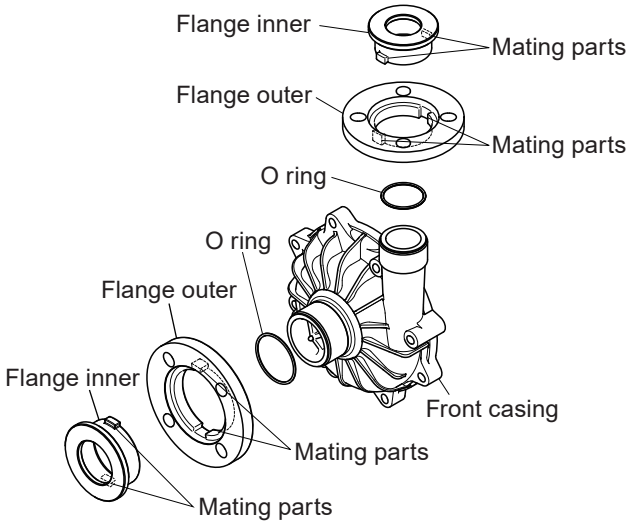

■ Assembly (lap joint)

1. Fit an O ring into the groove of the flange inner.
2. Combine the flange inner and outer, using the mating parts as a guide.
3. Turn the combination of the flanges clockwise until it will not turn further.

NOTE: O ring may come out of the groove. Keep it in place while tightening the flanges.

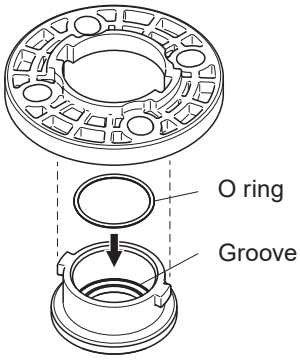

■ Drive magnet demounting

Take the following steps to demount the drive magnet from the motor.

<Pumps with a 0.75, 1.5, or 2.2kW motor>
- Remove the front casing from the adapter.
- Remove the adapter from the motor.
- Demount the drive magnet from the motor shaft.

<Pumps with a 0.37kW motor>
- Remove the front casing from the adapter.
- Demount the drive magnet from the motor shaft.
- Remove the adapter from the motor.

■ Drive magnet mounting

1. Make sure the motor is electrically-disconnected in advance. If the motor were to run in this process, personal injury would result.

2. Clean the motor shaft surface and the shaft hole of the drive magnet. Use a sand paper or sand blaster to remove burrs if necessary. Be careful not to drop the drive magnet, or it may break.

3. For the pumps with a 0.75, 1.5, or 2.2kW motor, first fit the drive magnet to the motor shaft, and then the adapter to the motor through the later steps (4 to 11).
   For the pumps with a 0.37kW motor (MX-F250/-F400), first fit the adapter to the motor with four M8×20 hexagon bolts and M8 washers, and then mount the drive magnet to the motor shaft through the later steps (4 to 10).

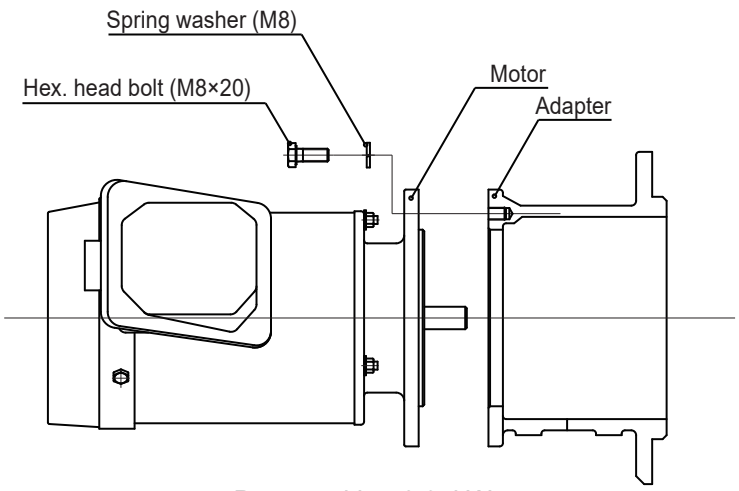

Pumps with a 0.37kW motor

4. Clean the motor shaft surface and the shaft hole of the drive magnet. Use a sand paper or sand blaster to remove burrs if necessary. Be careful not to drop the drive magnet, or it may break.

5. Adjust the depth of the hex. socket set screws in the drive magnet, so they will not hinder the insertion of the magnet to the motor shaft.

6. Mount the key to the motor shaft in place beforehand.

7. Slide the drive magnet down to the motor shaft until it bottoms out. If burrs or debris disturbs insertion, remove the drive magnet once and remove them. Also, adjust the key position if necessary.

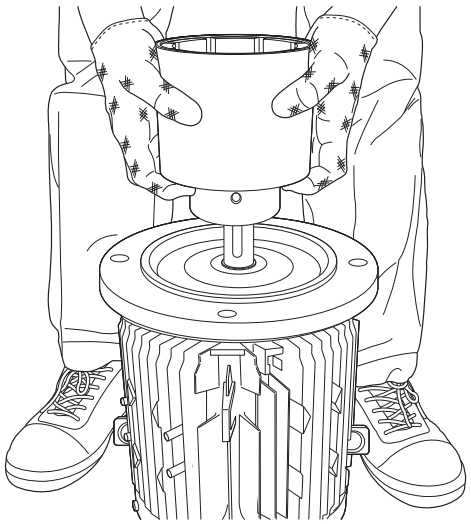

Pumps with 0.75, 1.5 or 2.2kW motor

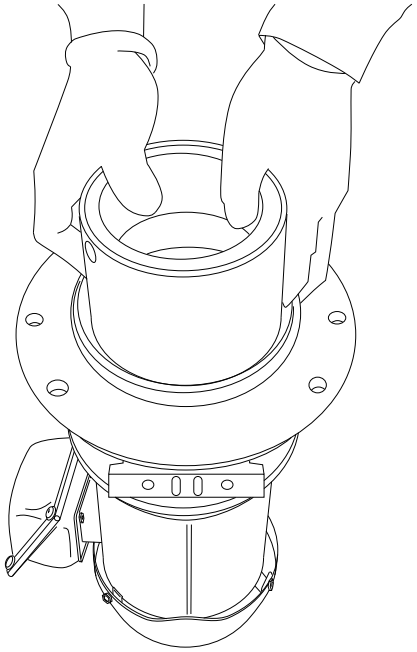

Pumps with 0.37kW motor

8. Check the dimension “H” is proper at each motor. Adjust the position of the drive magnet if necessary.

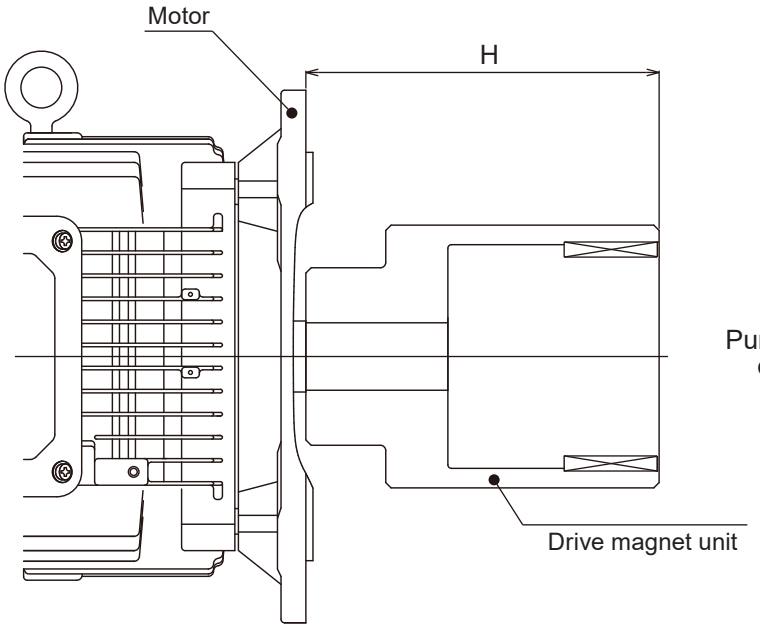

Pumps with 0.75, 1.5 or 2.2kW motor

Model		Motor output [kW]	Poles	H [mm]
MX-F	251	0.75	2	119
	401	0.75		119
	402	1.5		123
	403	2.2		123

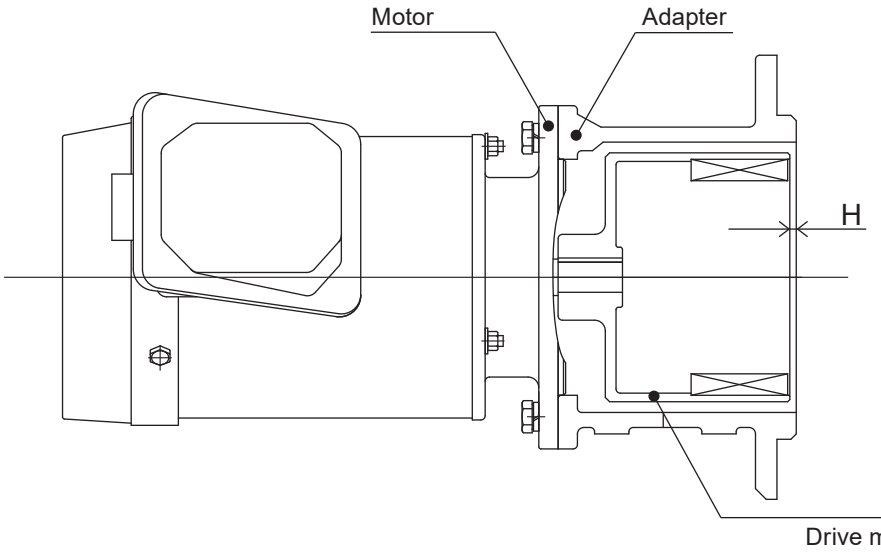

Pumps with 0.37kW motor

Model		Motor output [kW]	Poles	H [mm]
MX-F	250	0.37	2	3
	400	0.37		5

9. Use a torque wrench and tighten the hex. socket set screws by 12N·m to fix the drive magnet position. For the pumps with a 0.37kW motor (MX-F250/-F400), the set screws are accessible through the bottom bracket hole as shown below.

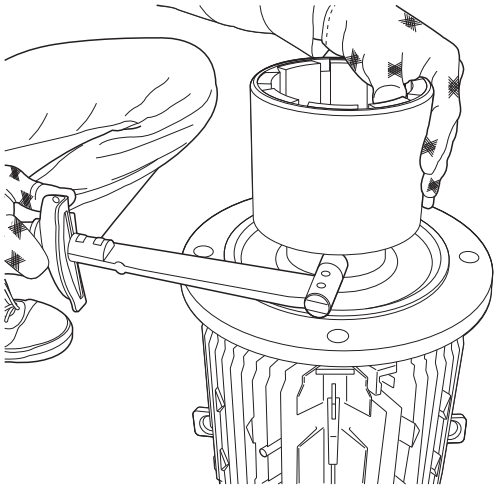

Pumps with 0.75, 1.5, or 2.2kW motor

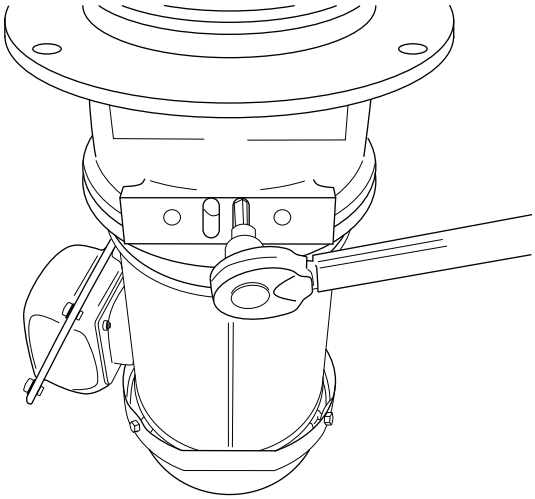

Pumps with 0.37kW motor

10. Check the drive magnet is fixed tight and won't loose the connection in operation.

11. Remount the adapter to the motor (Pumps with 0.75, 1.5 or 2.2kW motor).

NOTE: Always fit the "single" adapter part to the motor, not the combination of the adapter and the front casing (driven magnet). There is a very strong magnetic force between the drive magnet and the driven magnet. To reduce the risk of personal injury which could happen when both parts are unexpectedly and strongly pulled together, be sure to mount the adapter first to the motor, and then the front casing (driven magnet) to the adapter, on the step by step basis!

EC DECLARATION OF CONFORMITY

A copy of the original Declaration of Conformity

(SUPPLIER'S NAME)

WE

IWAKI CO.,LTD.

(ADDRESS)

6-6 2-CHOME KANDA-SUDACHO CHIYODA-KU TOKYO JAPAN

(PRODUCT)

DECLARE UNDER OUR SOLE RESPONSIBILITY THAT THE PRODUCTS

MAGNETIC DRIVE PUMP

(MODEL NAME)

MX-(F) 250 to 505 SERIES

TO WHICH THIS DECLARATION RELATES ARE IN CONFORMITY

WITH THE FOLLOWING STANDARDS OR DIRECTIVES AS FAR AS APPLICABLE

(DIRECTIVES)

MACHINERY DIRECTIVE 2006/42/EC (ANNEX IIA)
RoHS DIRECTIVE 2011/65/EU

(STANDARDS)

EN ISO12100: 2010 EN809: 1998 + A1: 2009 EN IEC63000: 2018

(A PERSON WHO IS AUTHORISED TO COMPILE THE TECHNICAL FILE IN THE COMMUNITY)

IWAKI EUROPE GMBH
SIEMENSRING 115 D-47877 WILLICH GERMANY

NOTE: THIS DECLARATION BECOMES INVALID IF TECHNICAL OR OPERATIONAL MODIFICATIONS ARE INTRODUCED WITHOUT THE MANUFACTURER'S CONSENT.

T. Sawada.

TSUTOMU SAWADA

DEPUTY SENIOR GENERAL MANAGER,

QUALITY ASSURANCE HEAD OFFICE

Tokyo, Sep. 2, 2021

(PLACE AND DATE OF ISSUE) **(NAME AND SIGNATURE OR EQUIVALENT MARKING OF AUTHORIZED PERSON)**

DOCUMENT NO. IS-51K-554-4

UK DECLARATION OF CONFORMITY

A copy of the original Declaration of Conformity

(SUPPLIER'S NAME)

WE

IWAKI CO.,LTD.

(ADDRESS)

6-6 2-CHOME KANDA-SUDACHO CHIYODA-KU TOKYO JAPAN

(PRODUCT)

DECLARE UNDER OUR SOLE RESPONSIBILITY THAT THE PRODUCTS

MAGNETIC DRIVE PUMP

(MODEL NAME)

MX-(F) 250 to 505 SERIES

TO WHICH THIS DECLARATION RELATES ARE IN CONFORMITY WITH THE FOLLOWING REGULATIONS OR STANDARDS AS FAR AS APPLICABLE

(REGULATIONS)

S.I. 2008/1597 SUPPLY OF MACHINERY (SAFETY)
S.I. 2012/3032 RESTRICTION OF HAZARDOUS SUBSTANCES

(STANDARDS)

EN ISO12100: 2010 EN809: 1998 + A1: 2009 EN IEC63000: 2018

(A PERSON WHO IS AUTHORISED TO COMPILE THE TECHNICAL FILE IN THE GB MARKET)

SENSYS LIMITED
UNIT 9 POND CLOSE WALKERN ROAD
STEVENAGE HERTS SG1 3QP UK

NOTE: THIS DECLARATION BECOMES INVALID IF TECHNICAL OR OPERATIONAL MODIFICATIONS ARE INTRODUCED WITHOUT THE MANUFACTURER'S CONSENT.

T. Sawada.

TSUTOMU SAWADA

SENIOR GENERAL MANAGER,

QUALITY ASSURANCE HEAD OFFICE

Tokyo, Jun. 6, 2023

(PLACE AND DATE OF ISSUE) **(NAME AND SIGNATURE OR EQUIVALENT MARKING OF AUTHORIZED PERSON)**

DOCUMENT NO. IS-51K-595-1

CE/UKCA conformity

■ **Information on CE/UKCA conformity of pump units when the motor is fitted by the customer (dealer/operator)**

We hereby confirm the CE/UKCA conformity of our pump unit provided that the following criteria about intended use are satisfied as described in this instruction manual:

- Motor conformity in accordance with any relevant EC directives/UKCA regulations which are currently effective.
- The dimensions of a required motor flange and shaft must fit the specified pump.
- The motor must be installed to the pump according to this instruction manual.
- Guaranteed grounding
- The pump must not be repainted over our original upper coating.

Any reseller or dealer who connects the pump with a motor and markets it as a complete unit must conform to all relevant EC directives/UKCA regulations. In such cases, the reseller or dealer then becomes the manufacturer.

Waste Electrical and Electronic Equipment (WEEE)

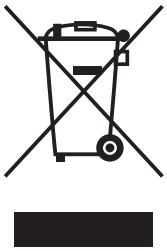

In accordance with the European Directive 2012/19/EU on waste electrical and electronic equipment, this product features the crossed-out wheelie bin symbol. When this product is disposed of in household wastes, toxic components included in it can cause major environmental and human health problems. Use appropriate waste collection systems for recovery and recycling. Contact your local distributor or nearest Iwaki company for the detailed collection systems.

IWAKI

https://www.iwakipumps.jp

IWAKI CO.,LTD. 6-6 Kanda-Sudacho 2-chome Chiyoda-ku Tokyo 101-8558 Japan
TEL: +81 3 3254 2935 FAX: +81 3 3252 8892

European Headquarter / IWAKI Europe GmbH
TEL: +49 2154 9254 0 FAX: +49 2154 9254 48
Germany / IWAKI Europe GmbH
TEL: +49 2154 9254 50 FAX: +49 2154 9254 55
The Netherlands / IWAKI Europe GmbH (Netherlands Branch)
TEL: +31 74 2420011 FAX: +49 2154 9254 48
Italy / IWAKI Europe GmbH (Italy Branch)
TEL: +39 0445 561219 FAX: +39 0445 569088
Spain / IWAKI Europe GmbH (Spain Branch)
TEL/FAX: +34 934 741 638
Poland / IWAKI Europe GmbH (East Europe Branch)
TEL: +48 12 347 0755 FAX: +48 12 347 0900
Denmark / IWAKI Nordic A/S
TEL: +45 48 242345
Finland / IWAKI Suomi Oy
TEL: +358 10 201 0490
Norway / IWAKI Norge AS
TEL: +47 23 38 49 00
Sweden / IWAKI Sverige AB
TEL: +46 8 511 72900
Belgium / IWAKI Belgium N.V.
TEL: +32 13 670200 FAX: +32 13 672030
France / IWAKI France S.A.
TEL: +33 1 69 63 33 70 FAX: +33 1 64 49 92 73
U.S.A. / IWAKI America Inc.
TEL: +1 508 429 1440 FAX: +1 508 429 1386
Brazil / IWAKI Do Brasil Comercio De Bombas Hidraulicas LTDA.
TEL/FAX: +55 19 3244 5900
China (Shanghai) / IWAKI Pumps (Shanghai) Co., Ltd.
TEL: +86 21 6272 7502 FAX: +86 21 6272 6929
China (Hong Kong) / IWAKI Pumps Co., Ltd.
TEL: +852 2607 1168 FAX: +852 2607 1000
China (Guangzhou) / GFTZ IWAKI Engineering & Trading Co., Ltd.
TEL: +86 20 84350603 FAX: +86 20 84359181
China (Shenzhen) / IWAKI Pumps (Shenzhen) Co., Ltd.
TEL: +86 0755 8656 3696
Singapore / IWAKI Singapore Pte Ltd.
TEL: +65 6316 2028 FAX: +65 6316 3221
Indonesia / IWAKI Singapore Pte Ltd. (Indonesia Office)
TEL: +62 21 6906606 FAX: +62 21 6906612
Malaysia / IWAKIm SDN. BHD.
TEL: +60 3 7803 8807 FAX: +60 3 7803 4800
Korea / IWAKI Korea Co., Ltd.
TEL: +82 2 6238 4800 FAX: +82 2 6238 4801
Taiwan / IWAKI Pumps Taiwan Co., Ltd.
TEL: +886 2 8227 6900 FAX: +886 2 8227 6818
Thailand / IWAKI (Thailand) Co., Ltd.
TEL: +66 2 322 2471 FAX: +66 2 322 2477
Australia / IWAKI Pumps Australia Pty Ltd.
TEL: +61 2 9899 2411 FAX: +61 2 9899 2421

T502-16 '26/09