IWAKI PUMPS

IWAKI Magnetic Drive Pump

MXM (Europe)

Instruction Manual

⚠ Read this manual before use of product

Thank you for selecting an Iwaki MXM Series Magnetic Drive Pump. This instruction manual deals with *"Safety instructions"*, *"Outline"*, *"Installation"*, *"Operation"*, and *"Maintenance"* sections. Please read through this manual carefully to ensure the optimum performance, safety and service of your pump.

Contents

Important instructions ····· **1**

Safety instructions ····· **2**

Outline
1. Unpacking & Inspection 5
2. Model codes 6
3. Operating conditions 7
4. Part names 8

Installation
1. Before installation 13
2. Pipework 14
3. Wiring 16
4. Protection equipment 17

Operation
1. Before operation 19
2. Operation 20
3. Shutdown 21

Maintenance
1. Troubleshooting 23
2. Maintenance & Inspection 25
3. Disassembly & Assembly 28
4. Spare & Wear parts 39
5. Mass of pumps 42

EC DECLARATION OF CONFORMITY ····· 43
UK DECLARATION OF CONFORMITY ····· 44
CE/UKCA conformity ····· 45
Waste Electrical and Electronic Equipment (WEEE) ····· 45

This instruction manual should be kept on hand by the end user for quick reference.

Contact us or your nearest dealer if you have any questions.

Important instructions

For the Safe and Correct Handling of the Pump

- "Safety Instruction" section deals with important details about handling of the product. Before use, read this section carefully for the prevention of personal injury or property damage.
- Observe the instructions accompanied with "WARNING" or "CAUTION" in this manual. These instructions are very important for protecting users from dangerous situations.
- The symbols on this instruction manual have the following meanings:

⚠ **WARNING**	**Nonobservance or misapplication of "Warning" sections could lead to a serious accident which may result in death.**
⚠ **CAUTION**	**Nonobservance or misapplication of "Caution" sections could lead to personal injury or property damage.**

Types of Symbols

⚠ Indicates that "Warning" or "Caution" must be exercised. Inside this triangle, a concrete and practical image provided as a warning or caution message is depicted.

⃠ Indicates a prohibited action or procedure. Inside or near this circle, a concrete and practical image of the activity to be avoided is depicted.

❗ Indicates an important action or procedure which must be performed or carried out without fail. Failure to follow the instructions herein can lead to malfunction or damage to the pump.

Ⓔx For Use of Our ATEX-Certified Models in Explosive Environments

Use the attached additional instructions as well as this standard manual.

⚠ Export Restrictions

Technical information contained in this instruction manual might be treated as controlled technology in your countries, due to agreements in international regime for export control.

Please be reminded that export license/permission could be required when this manual is provided, due to export control regulations of your country.

Safety instructions

⚠WARNING

- **Access limitation**

  The magnet drive pump has a pair of strong magnets (the magnet capsule unit and drive magnet). The strong magnet field could adversely affect the persons who are assisted by electronic devices such as the pacemaker.


Prohibited

- **Turn off power before service**

  Risk of personal injury. Before performing any service, turn off power to stop the pump and related devices and display a warning sign near the power switch to prevent others from restoring power during service.


Turning off power

- **Wear protective clothing**

  Always wear protective clothing such as an eye protection, chemical resistant gloves, a mask and a face shield during disassembly, assembly or maintenance work. The specific solution will dictate the degree of protection. Refer to SDS precautions from the solution supplier.


Wear protection

- **Use an overhead crane or any other proper transporting machine**

  Two or more operators may be needed for ensuring safe transport depending on the pump size and weight.


Requirement

- **Use the eye bolts**

  Use the eye bolt when lifting the pump only. If the pump and the motor are mounted on the baseplate, use lifting holes on the baseplate.


Requirement

- **Do not modify the pump**

  Alterations to the pump carry a high degree of risk. It is not the manufacturer's responsibility for any failure or injury resulting from alterations to the pump.


Do not rework or alter

- **Daily inspection and maintenance**

  Daily inspection and maintenance are required for the prevention of chemical spray or leakage when handling:

  - Explosive or flammable liquid,
  - Corrosive liquid, or
  - Harmful liquid.


Requirement

- **Ventilation**

  Fumes or vapours can be hazardous with certain solutions. Ensure proper ventilation at the operation site.


Requirement

Safety instructions

⚠CAUTION

- **Do not catch the finger**

  Magnetic force of the pump is powerful. When taking apart or putting together the pump, take measures not to catch the finger in the frame. Also, keep the drive magnet and the driven magnet free from iron debris/ powder.


Requirement

- **Do not run pump dry**

  Do not run pump dry (operation without priming water or with a suction valve closed). Internal parts are excessively worn by friction heat and fatal pump damage results.


Prohibited

- **Qualified personnel only**

  The pump should be handled or operated by qualified personnel with a full understanding of the pump. Any person not familiar with the product should not take part in the operation or management of the pump. If necessary, provide training to operators.


Requirement

- **Do not use the pump in any condition other than its intended purpose**

  The use of the pump in any conditions other than those clearly specified may result in failure or injury. Use this product in specified conditions only.


Prohibited

- **Static electricity**

  When low electric conductivity liquids such as ultra-pure water and fluor inactive liquid (e.g. Fluorinert™) are handled, static electricity may be generated in the pump and may cause static discharge. Take countermeasures to remove static electricity.


Requirement

- **Commissioning**

  Friction heat builds up and damages the internal parts. Break in the pump to expel gas from the pump and piping, especially when handling liquids that generate gas bubbles (hydrogen peroxide or sodium hypochlorite).


Requirement

- **Spill precautions**

  Ensure protection and containment of solution in the event of plumbing or pump damage (secondary containment). Do not drain the liquid onto the floor.


Requirement

- **Disposal of a used pump**

  Remove the liquid and flush it out before the pump is disconnected from piping. Dispose of any used or damaged pump and the removed liquid in accordance with local rules and regulations. See page 45 to comply with the European Directive 2012/19/EU on waste electrical and electronic equipment.


Requirement

Outline

1. Unpacking & Inspection 5

2. Model codes 6

3. Operating conditions..... 7

4. Part names 8

1. Unpacking & Inspection

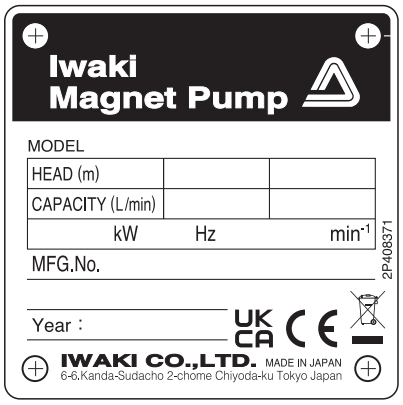

Open the package and check that the product conforms to your order. If any problem or inconsistency is found, immediately contact your distributor.

1. Check the nameplate to see if the information such as model codes, discharge capacity, discharge pressure and stroke rate are as ordered.
2. Check for transit damage, deformation, and loose bolts.

*The CE/UKCA markings on our product(s) are for us to market the product(s) into the European Union market / the Great Britain (England, Wales and Scotland) market, however, the CE/UKCA markings do not ensure any safety or conformity of the product(s) outside the EU/GB markets.
When the pump is incorporated into the equipment marketed in the EU/GB markets, such equipment must meet all the requirements of applicable directives/regulations.
In such a case, any person who places the equipment on the markets must carry CE/UKCA marks on the equipment as a manufacturer.

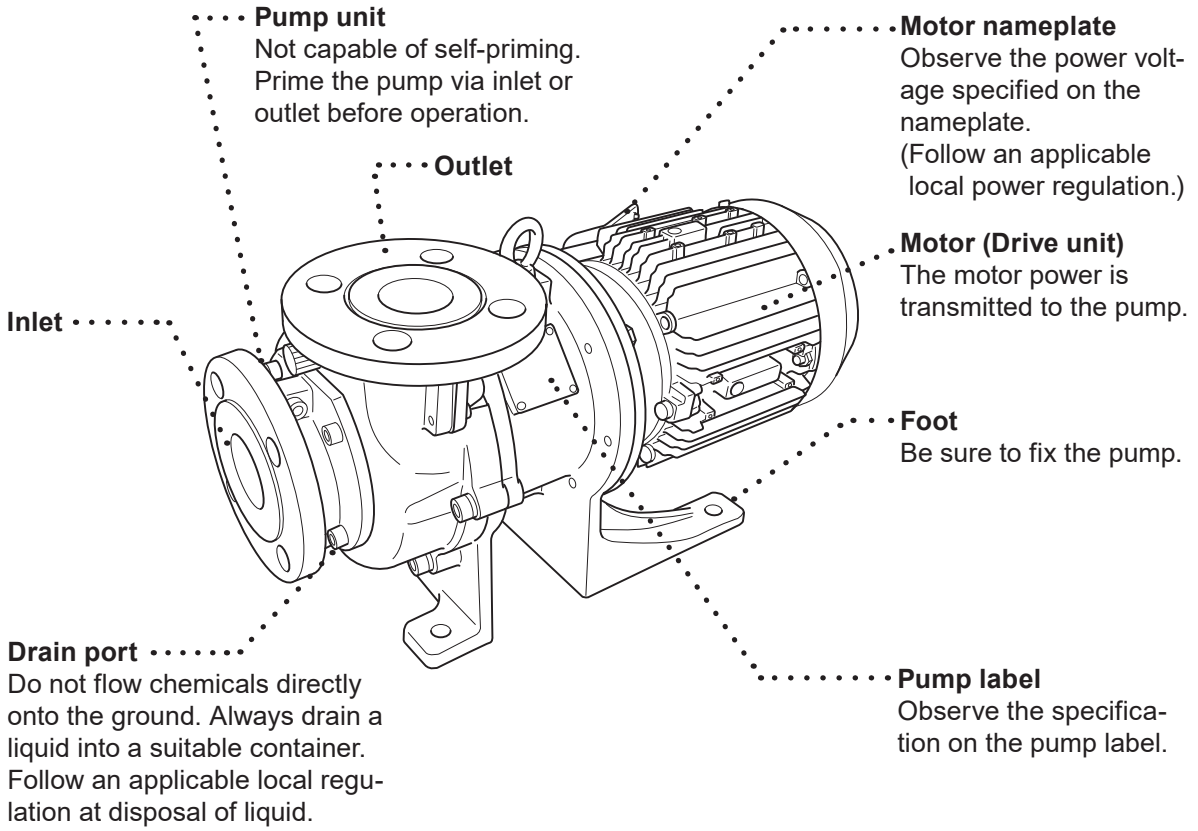

⚠ CAUTION

Wet a cloth with tap water and wring it out for cleaning the pump. Use a neutral detergent for greasy dirt and then rub with a dry cloth. Do not wipe nameplates, labels or pump body with any solvent.

2. Model codes

MXM 54 3 - 150 3 E CF V J - B
a b c d e f g h i

a. Pump bore
Inlet bore × Outlet bore
22: 25A × 25A
44: 40A × 40A
54: 50A × 40A

b. Motor output
0: 0.37kW 1: 0.75kW 2: 1.5kW 3: 2.2kW 5: 4.0kW

c. Impeller diameter
70-150mm

d. Impeller code
1 or 2 ····· MXM22
1 or 2 ····· MXM44
1, 3 or 4 ···· MXM54

e. Wet end material
E: CFRETFE

f. Bearing/spindle material
CF: High density carbon/High purity alumina ceramic
FF: High purity alumina ceramic/High purity alumina ceramic
KK: SiC/SiC

g. O ring material
V: FKM E: EPDM A: AFLAS® P: DAI-EL PERFLUOR®

h. Flange connection/Motor standard
J : JIS flange + JIS motor
I : ISO flange + IEC motor
A : ANSI flange + JIS motor
U : ANSI flange + NEMA motor

i. Special specification
Blank: Standard B: With base H: Europe version S: Special specification

3. Operating conditions

Maximum operating pressure

Observe the maximum operating pressure below.

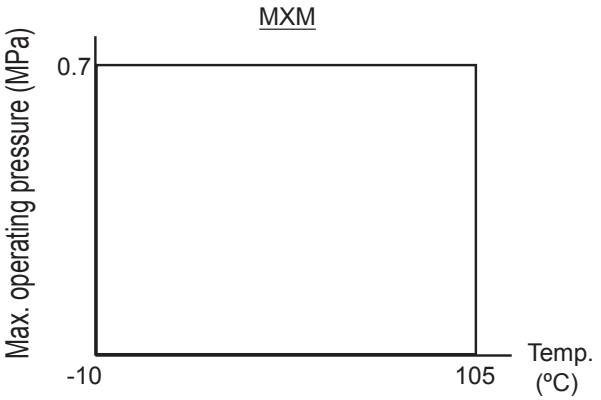

Ambient temperature: 0-40°C
Relative humidity: 35-85%RH

NOTE: The minimum liquid temperature for AFLAS® O ring is 10°C.

Slurry

Generally the pump can not send slurry except the KK type (SiC bearing and SiC spindle).

The KK type can handle slurry up to 5% (concentration), 50μm (particle size) and 80Hs (hardness).

Contact us for details.

Performance change

Shaft power, discharge capacity and pump head vary with specific gravity and viscosity. The pump is designed for a specified liquid. Contact us before changing liquid specification.

Temperature change

Note that viscosity, vapour pressure or corrosiveness changes with liquid temperature. The change is shown in performance such as flow rate while the pump itself is not affected.

The minimum liquid viscosity for the FF type

1 mPa•S (cP)

4. Part names

MXM220H

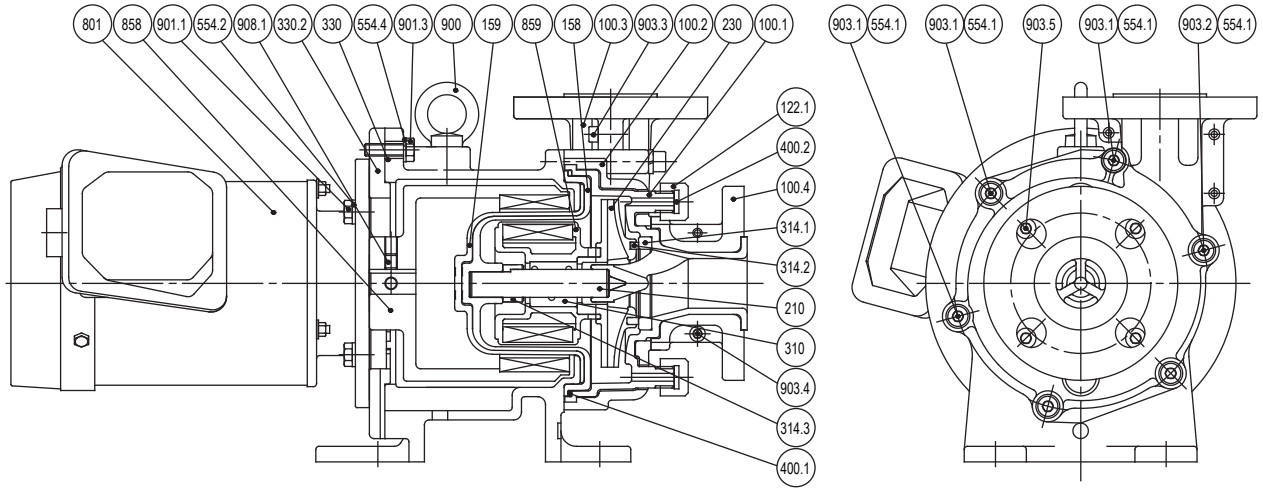

NO.	PART NAMES	Q'TY	MATERIAL	REMARKS
100.1	FRONT CASING	1	CFRETFE	
100.2	COVER A	1	DUCTILE IRON	
100.3	COVER B	1		
100.4	COVER C	2		
122.1	DRAIN CAP	2	ETFE	
158	REAR CASING	1	CFRETFE	
159	REAR CASING COVER	1	FRP	
230	IMPELLER	1	CFRETFE	
330	FRAME	1	DUCTILE IRON	
330.2	MOTOR ADAPTER	1		
400.1	O RING	1	V: FKM E: EPDM A: AFLAS® P: DAI-EL PERFLUOR®	JIS B 2401 G140
400.2	GASKET	2		
554.1	SPRING WASHER	6	STNLS STL	M8
554.2	SPRING WASHER	4		
554.4	SPRING WASHER	4		
801	MOTOR	1		0.37kW
858	DRIVE MAGNET UNIT	1	FERRITE MAGNET+DUCTILE IRON	
859	MAGNET CAPSULE	1	FERRITE MAGNET+CFRETFE	
900	EYE BOLT	1	STEEL	M10
901.1	HEX. HEAD BOLT	4	STNLS STL	M8×20
901.3	HEX. HEAD BOLT	4		M8×25
903.1	HEX SOCKET HEAD BOLT	3		M8×50
903.2	HEX SOCKET HEAD BOLT	3		M8×70
903.3	HEX SOCKET HEAD BOLT	3	STEEL	M6×20
903.4	HEX SOCKET HEAD BOLT	2		
903.5	HEX SOCKET HEAD BOLT	4	STNLS STL	M8×15
908.1	HEX SOCKET SET SCREW	2	STEEL	

NO.	PART NAMES	Q'TY	MATERIAL			REMARKS
			CF	FF	KK	
210	SPINDLE	1	HIGH PURITY ALUMINA CERAMIC		SiC	
310	BEARING	1	HIGH DENSITY CARBON	HIGH PURITY ALUMINA CERAMIC	SiC	
314.1	LINER RING	1	HIGH PURITY ALUMINA CERAMIC		SiC	
314.2	MOUTH RING	1	FILLED PTFE		SiC	
314.3	REAR THRUST	1	CFRETFE			

Outline

MXM221H

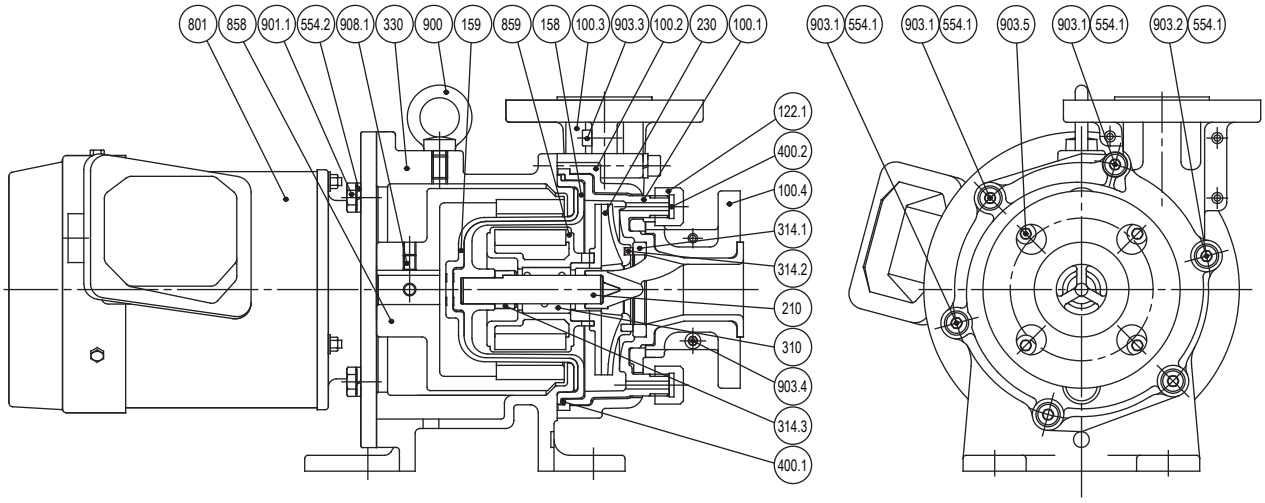

NO.	PART NAMES	Q'TY	MATERIAL	REMARKS
100.1	FRONT CASING	1	CFRETFE	
100.2	COVER A	1	DUCTILE IRON	
100.3	COVER B	1		
100.4	COVER C	2		
122.1	DRAIN CAP	2	ETFE	
158	REAR CASING	1	CFRETFE	
159	REAR CASING COVER	1	FRP	
230	IMPELLER	1	CFRETFE	
330	FRAME	1	DUCTILE IRON	
400.1	O RING	1	V: FKM E: EPDM A: AFLAS® P: DAI-EL PERFLUOR®	JIS B 2401 G140
400.2	GASKET	2		
554.1	SPRING WASHER	6	STNLS STL	M8
554.2	SPRING WASHER	4		M10
801	MOTOR	1		0.75kW
858	DRIVE MAGNET UNIT	1	FERRITE MAGNET+DUCTILE IRON	
859	MAGNET CAPSULE	1	FERRITE MAGNET+CFRETFE	
900	EYE BOLT	1	STEEL	
901.1	HEX. HEAD BOLT	4	STNLS STL	M10×25
903.1	HEX SOCKET HEAD BOLT	3		M8×50
903.2	HEX SOCKET HEAD BOLT	3		M8×70
903.3	HEX SOCKET HEAD BOLT	3	STEEL	M6×20
903.4	HEX SOCKET HEAD BOLT	2		
903.5	HEX SOCKET HEAD BOLT	4	STNLS STL	M8×15
908.1	HEX SOCKET SET SCREW	2	STEEL	

NO.	PART NAMES	Q'TY	MATERIAL			REMARKS
			CF	FF	KK	
210	SPINDLE	1	HIGH PURITY ALUMINA CERAMIC		SiC	
310	BEARING	1	HIGH DENSITY CARBON	HIGH PURITY ALUMINA CERAMIC	SiC	
314.1	LINER RING	1	HIGH PURITY ALUMINA CERAMIC		SiC	
314.2	MOUTH RING	1	FILLED PTFE		SiC	
314.3	REAR THRUST	1	CFRETFE			

Outline

MXM441H/ 442H

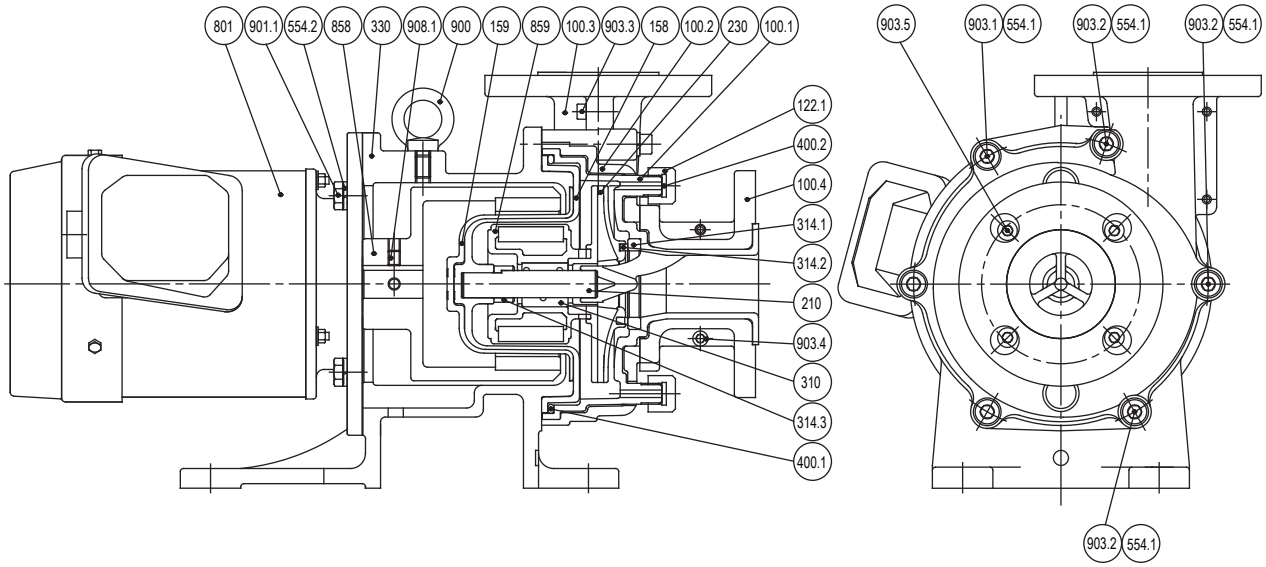

NO.	PART NAMES	Q'TY	MATERIAL		REMARKS
100.1	FRONT CASING	1	CFRETFE		
100.2	COVER A	1	DUCTILE IRON		
100.3	COVER B	1			
100.4	COVER C	2			
122.1	DRAIN CAP	2	ETFE		
158	REAR CASING	1	CFRETFE		
159	REAR CASING COVER	1	FRP		
230	IMPELLER	1	CFRETFE		
330	FRAME	1	DUCTILE IRON		
400.1	O RING	1	V: FKM E: EPDM A: AFLAS®		JIS B 2401 G160
400.2	GASKET	2	P: DAI-EL PERFLUOR®		
554.1	SPRING WASHER	6	STNLS STL		M10
554.2	SPRING WASHER	4			M10
801	MOTOR	1			0.75/1.5kW
858	DRIVE MAGNET UNIT	1	0.75kW FERRITE MAGNET+DUCTILE IRON	1.5kW REAR EARTH MAGNET+DUCTILE IRON	
859	MAGNET CAPSULE	1	0.75kW FERRITE MAGNET+CFRETFE	1.5kW REAR EARTH MAGNET+CFRETFE	
900	EYE BOLT	1	STEEL		
901.1	HEX. HEAD BOLT	4	STNLS STL		M10×25
903.1	HEX SOCKET HEAD BOLT	3			M10×55
903.2	HEX SOCKET HEAD BOLT	3			M10×75
903.3	HEX SOCKET HEAD BOLT	3	STEEL		M6×20
903.4	HEX SOCKET HEAD BOLT	2			
903.5	HEX SOCKET HEAD BOLT	4	STNLS STL		M8×20
908.1	HEX SOCKET SET SCREW	2	STEEL		

NO.	PART NAMES	Q'TY	MATERIAL			REMARKS
			CF	FF	KK	
210	SPINDLE	1	HIGH PURITY ALUMINA CERAMIC		SiC	
310	BEARING	1	HIGH DENSITY CARBON	HIGH PURITY ALUMINA CERAMIC	SiC	
314.1	LINER RING	1	HIGH PURITY ALUMINA CERAMIC		SiC	
314.2	MOUTH RING	1	FILLED PTFE		SiC	
314.3	REAR THRUST	1	CFRETFE			

Outline

MXM542/ 543/ 545

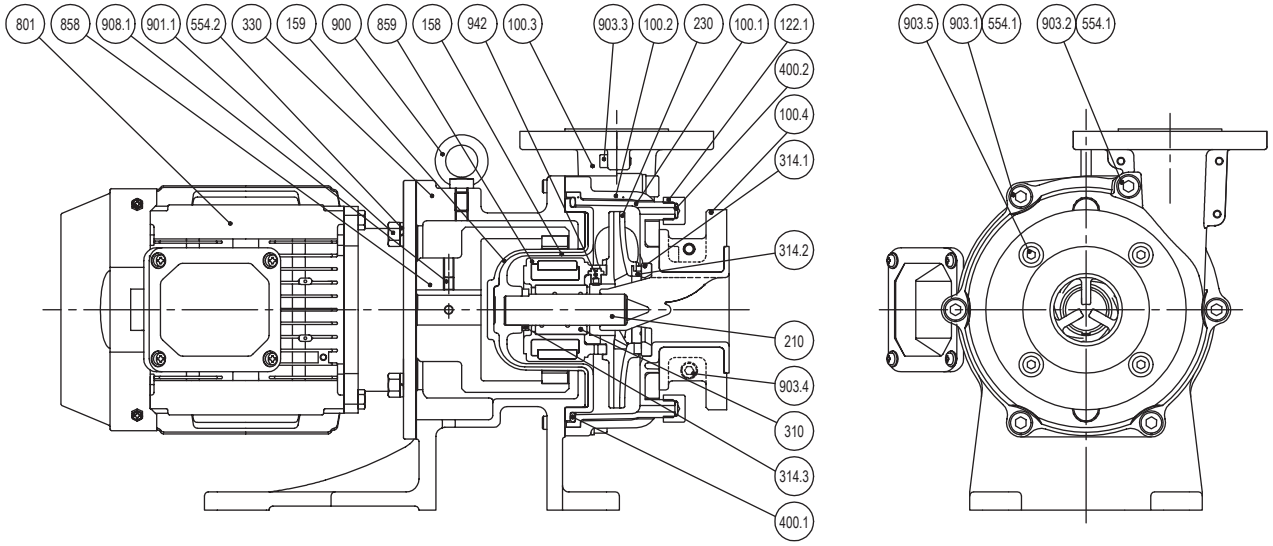

NO.	PART NAMES	Q'TY	MATERIAL	REMARKS
100.1	FRONT CASING	1	CFRETFE	
100.2	COVER A	1	DUCTILE IRON	
100.3	COVER B	1		
100.4	COVER C	2		
122.1	DRAIN CAP	2	ETFE	
158	REAR CASING	1	CFRETFE	
159	REAR CASING COVER	1	FRP	
230	IMPELLER	1	CFRETFE	
330	FRAME	1	DUCTILE IRON	
400.1	O RING	1	V: FKM E: EPDM A: AFLAS® P: DAI-EL PERFLUOR®	JIS B 2401 G165
400.2	GASKET	2		
554.1	SPRING WASHER	6	STNLS STL	M10
554.2	SPRING WASHER	4		1.5/2.2kW: M10 4.0kW: M12
801	MOTOR	1		1.5/2.2/4.0kW
858	DRIVE MAGNET UNIT	1	REAR EARTH MAGNET+DUCTILE IRON	
859	MAGNET CAPSULE	1	REAR EARTH MAGNET+CFRETFE	
900	EYE BOLT	1	STEEL	M10
901.1	HEX. HEAD BOLT	4	STNLS STL	1.5/2.2kW: M10×30 4.0kW: M12×35
903.1	HEX SOCKET HEAD BOLT	5		M10×40
903.2	HEX SOCKET HEAD BOLT	1		M10×80
903.3	HEX SOCKET HEAD BOLT	3	STEEL	M6×18
903.4	HEX SOCKET HEAD BOLT	2		M8×20
903.5	HEX SOCKET HEAD BOLT	4	STNLS STL	M8×15
908.1	HEX SOCKET SET SCREW	1	STEEL	M8×10
942	LOCK PIN	2	CFRETFE	

NO.	PART NAMES	Q'TY	MATERIAL			REMARKS
			CF	FF	KK	
210	SPINDLE	1	HIGH PURITY ALUMINA CERAMIC		SiC	
310	BEARING	1	HIGH DENSITY CARBON	HIGH PURITY ALUMINA CERAMIC	SiC	
314.1	LINER RING	1	HIGH PURITY ALUMINA CERAMIC		SiC	
314.2	MOUTH RING	1	FILLED PTFE		SiC	
314.3	REAR THRUST	1	CFRETFE			

Installation

1. Before installation 13

2. Pipework..... 14

3. Wiring 16

4. Protection equipment..... 17

1. Before installation

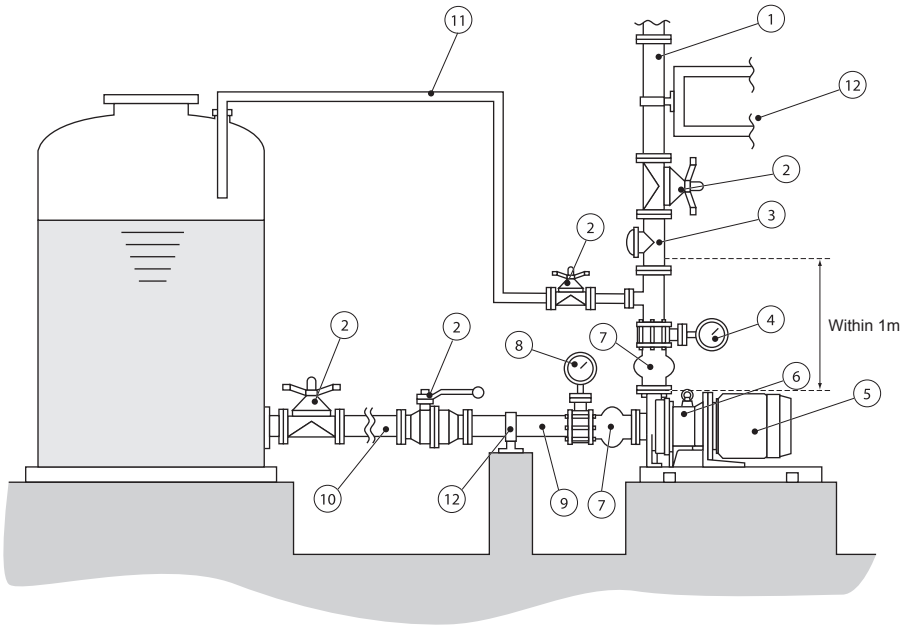

1. Discharge line
2. Gate valve
3. Check valve
4. Pressure gauge
5. Motor
6. Magnetic drive pump
7. Expansion joint
8. Vacuum (compound) gauge
9. Straight suction line
10. Suction line
11. Air vent line
12. Pipe support

Piping layout

■ Installation location

1. If the pump unit is not anchored to the foundation and if the motor unit is heavier than the pump unit, the entire pump leans towards to the motor. See page 42 as well.
2. Select a flat and sound foundation where is free from vibration
3. Keep a work space wide enough for motor removal (back pull out), assembly or disassembly.
4. The foundation should be larger than a pump base footprint.

■ Pump position

1. Install the pump as close to a supply tank and under flooded suction application.
2. In the suction lift application, arrange the auxiliary line for priming and mount a foot valve at the suction pipe end.

■ Foundation work

1. See the diagram and instructions below as necessary.
2. For the pump without the base plate, do not mount the foot in the foundation. Otherwise, the pump can not be dismantled.

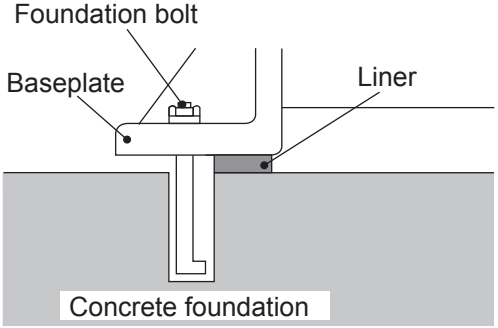

2. Pipework

■ Tightening torque between the pump and pipework

Connect the pump to pipework via inlet and outlet flanges according to the tightening torque below. Tighten bolts diagonally at even tension.

Model	Bolt size	Tightening torque
MXM22/44/54	M16	79N•m

NOTE1: The table is based on use of metal pipe flanges with rubber gaskets.
NOTE2: Select the best bolt length so as not to come in contact with the pump.

■ Piping load and momentum

Try not to apply heavy load to the pump inlet and outlet flanges. Permissible piping weight and moment to the pump are as below.

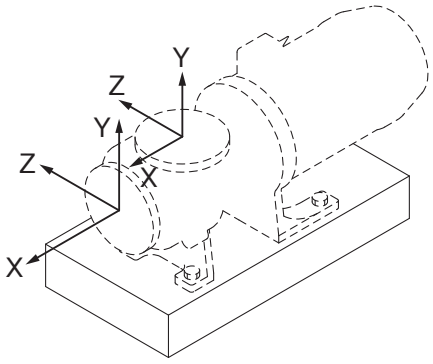

Permissible stress to inlet & outlet flanges

Load direction	Load kN	
	Discharge flange	Suction flange
Fx	0.71	0.89
Fy (compression/tension)	0.89/0.44	0.58
Fz	0.58	0.71

Permissible moments to inlet & outlet flanges

Load direction	Moment kN•m	
	Discharge flange	Suction flange
Mx	0.35	0.46
My	0.46	0.35
Mz	0.23	0.23

■ Suction line

1. Flooded suction application

Always realize the flooded suction.

2. Suction line bore

A suction line bore should be equal to or larger than pump inlet.

3. Shortest line length

Keep the shortest length with the minimum number of bends.

4. Straight line length

A suction line should be laid on straight at least for 500mm from the pump inlet.

For easy pump removal and maintenance, install a removable pipe of 300mm in the straight line.

5. Air pocket

Do not make any projection or arched line where air may be trapped.

A suction line should be laid with a rising gradient of 1/100 toward the pump.

6. Use of the eccentric reducer

If the pump inlet bore is different from that of suction pipe, use the eccentric reducer. Upper side should always be level. Air may be trapped if it is mounted upside down.

7. Gate valve installation

In flooded suction application, always install a gate valve on a suction line for overhaul & inspection.

8. Flushing line

Lay on a flushing line for cleaning the pump when handling a harmful liquid.

9. Suction line end

The suction line end should always be at least 500mm lower than a liquid level for the prevention of entrained air.

10. In suction lift application

- The distance between the end of a suction line and the bottom of a supply tank should be 1 to 1.5 times wider than the suction line bore.
- Be sure to install a foot valve or a check valve on a suction line.

11. Piping support

Use metal supports so that the pump is not subject to piping weight or thermal stress.

12. Connections

Each connection must be completely sealed so that air can not be entrained. Otherwise, a poor flow or the seizure of bushing may result.

■ Discharge line

1. Discharge line bore

When a discharge line is long but its bore is equal to the pump outlet bore, the specified performance may not be obtained because pipe resistance becomes high. Calculate pipe resistance in advance to decide a discharge line bore.

2. Gate valve installation

Install a gate valve on a discharge line to adjust flow rate and protect the motor from overload. Install check valve as necessary, the optimum installation order is : Pump → Check valve → Gate valve.

3. Discharge valve installation

A discharge valve should be positioned about 1m away from the pump. An air vent line should be mounted near the valve in order to prevent air from remaining.

4. Pressure gauge

Install a pressure gauge on a discharge line to check a discharge capacity and delivery head.

5. Check valve

Install a check valve in the following cases.

- Discharge line is longer than 15m.
- A delivery head is higher than 15m.
- The distance between a liquid level in a supply tank and the top end of a discharge line is 9m or longer.
- Two pumps run in parallel.

6. Air vent line

Lay on an air vent line on a discharge line when the horizontal line length is longer than 15m or more.

7. Drain

Install a drain valve as necessary (to prevent liquid from freezing in the pump, etc.).

8. Piping support

Use metal supports so that the pump is not subject to piping weight or thermal stress.

9. Priming line

Lay on a priming line on a discharge line in suction lift application.

3. Wiring

Electrical works or wiring must be carried out by a qualified person according to local laws or regulations.

- Use the electromagnetic switch which conforms to the motor specifications of voltage and capacity etc.
- When installing the pump out of doors, take a measure to prevent rain water from getting into the switch.
- Install the electromagnetic or the push-button switch apart from the pump.

*See the instruction manual of the motor manufacturer for the motor detail.

4. Protection equipment

It is recommended to install the following monitoring devices in order to protect the pump.

1. Current sensor/ Power sensor	The sensors monitor the motor load and stop the pump on the detection of load change, giving an alarm.
2. Pressure sensor	The sensor monitors the starting pressure and stops the pump on the detection of pressure change, giving an alarm.
3. Flow sensor	The sensor monitors the discharge flow and stops the pump on the detection of flow change, giving an alarm.
4. Level sensor	The sensor monitors the liquid level in the tank and stops the pump when it falls below the specified level, giving an alarm.

It is recommended to install two or more monitoring devices. The more monitoring devices, the more possibility of protecting the pump.

The DRN series pump protector (an electric current sensing type abnormal operation preventive device) is also available as an option. Contact us for detail.

Operation

1. Before operation 19

2. Operation..... 20

3. Shutdown..... 21

Operation

1. Before operation

⚠CAUTION

- Never run pump dry or shut off a suction valve during operation. Otherwise, the pump fails in a short period. Especially for the FF types, the bearing and spindle can be damaged in a quite-short time of about one minute.



- Check the rotational direction of the pump. Clockwise seen from the motor end is a correct direction. Operation in the reverse direction may cause pump damage.



- Stop the pump within one minute if cavitation occurs. Do not continue operation with entrained air. Especially for the FF types, the bearing and spindle can be damaged in a quite-short time of about one minute.



- Stop the pump immediately when the magnet coupling is disconnected. The magnet force reduces if the pump keeps on running for one minute or longer in this condition.



- Keep liquid temperature change within 80˚C through operation and stopping. Retighten the drain cap when the surrounding or liquid temperature significantly changes. The maximum number of ON-OFF operation should be within six times an hour. Frequent ON-OFF operation can reduce the pump life.



- Start the pump with a closed discharge valve in order to avoid water hammer.



- Closed-discharge operation should be within one minute. If the pump runs with a discharge valve closed for a long time, the liquid temperature inside the pump rises and it damages the pump.



- If power is interrupted when the pump is running, switch off and close a discharge valve.



- Take extra care so that the discharge pressure does not exceed the pump limit. See page 7 for the maximum operating pressure.



- Risk of burning. Pump and pipe surface temperature rise high along with liquid temperature. Do not touch the pump or pipe surface directly in or right after operation.

Model	Liquid temperature	Possible highest surface temperature (at ambient 40°C)
MXM220/221	105°C	80°C
MXM441/442		
MXM542/543/545		95°C



- The noise level is shown below. In case the pump noise affects human health or communication to secure a safety, provide a noise reduction cover.

Model	Noise level
MXM220/221	80dB
MXM441/442	
MXM542/543/545	



2. Operation

1. Fully close a discharge valve and fully open a suction valve.

2. Prime the pump.

- If the pump is in the flooded suction application, fully open both discharge and suction valves.
- If the pump is in the suction lift application, prime a suction line as well as the pump.

3. Check rotating direction of the motor.

- Close a discharge valve. Power the motor for a quick moment (within a second) in order to check the rotation direction. A correct direction is shown with an "arrow" mark on the pump (Clockwise seen from motor fan side).
- Check if the motor fan smoothly stops when turning off power.

NOTE: If the motor does not stop smoothly, check rotating parts.

4. Air elimination

- Before full-scale operation, eliminate the air in the pump.
- Fully open an air vent line. Run the pump for one second and repeat it 3 to 5 times for air elimination.
- After the air elimination, fully close a discharge valve.

NOTE: In case air vent line is not equipped, repeat the momentary run several times with a discharge valve open.

5. Full-scale operation

- Start the pump with a discharge valve fully closed.

NOTE: Stop the closed-discharge operation within one minute.

- Check that discharge pressure rises to the shut off pressure.
- Gradually open discharge valve to obtain the specified pressure (capacity).

NOTE: Pay attention to the over-load caused by an excessively opened valve.

Precautions on operation

1. When the pump keeps running in negative rotation, the pump breaks.
2. **Closed-discharge operation should be stopped within one minute.**
3. Observe the minimum flow rate. Otherwise, friction heat may build up and damage the bearing and sliding parts.

MXM220/221/441/442		MXM542/543/545	
Impeller code	Min flow rate	Impeller code	Min flow rate
1, 2	10L/m	1, 3	20L/m
		4	50L/m

*See the "***2. Model codes"** section on page 6.

3. Shutdown

1. Slowly close a discharge valve.

Quick closing by a solenoid valve may cause water hammer and damage the pump. Be sure to slowly close any discharge valve.

2. Switch off and stop the pump.

Check that the pump stops smoothly. If the pump stops roughly, make an inspection.

NOTE: When leave the pump stopped for a long period:

Take a countermeasure against freezing in the pump and piping or,

In case a blackout has interrupted operation, switch off the pump and close a discharge line.

Maintenance

1. Troubleshooting 23

2. Maintenance & Inspection..... 25

3. Disassembly & Assembly..... 28

4. Spare & Wear parts 39

5. Mass of pumps 42

Maintenance

1. Troubleshooting

Turn off power to stop operation upon sensing abnormalities. And then look for a root cause or contact us as necessary.

Troubles	Symptom		Cause	Point to be checked & Countermeasures
	When a discharge valve is closed.	When a discharge valve is opened.		
Liquid can not be discharged.		The readings of pressure/vacuum gauges drop to zero.	• Priming liquid level is too low. • Dry running	• Stop and prime the pump and resume operation. • Dismantle and inspect the pump.
	The pump can not be primed.		• The foot valve malfunction due to foreign matter clogging.	• Clean the foot valve.
	After starting, the pressure drops as a discharge valve is opened.	The readings of pressure/vacuum gauges fluctuate and drops to zero.	• Air ingress through a suction line or a connection.	• Check if suction line connections are completely sealed. • Check if liquid level in supply tank is not too low.
			• Disconnection of the magnet coupling	• Check if the motor is not overloaded by checking amperage. • Check if foreign matters do not lock the impeller or magnet capsule. • Check if voltage is normal.
	The pressure gauge keeps showing a low pressure.		• Low pump speed • The pump rotates in reverse.	• Check wiring or motor. • Interchange motor wiring.
Discharge capacity is too low.	Pressure & vacuum are normal.	Vacuum is high.	• The strainer is clogged with foreign matters.	• Remove foreign matters.
		Vacuum is very high.	• Air pocket in suction line	• Check and correct suction line.
			• Foreign matters are clogged at impeller inlet.	• Remove foreign matters.
		The readings of pressure gauge & vacuum gauge fluctuate.	• Air ingress from a suction line or a connection.	• Check suction line connections and retighten as necessary.
			• The pump or discharge line clogs with foreign matters.	• Remove foreign matters or scales.
		Vacuum is high but pressure is normal.	• Resistance such as air pocket in suction line.	• Check if there is no arched pipework.
		Vacuum is normal but pressure is high.	• Actual delivery head is too high or pipe resistance is too large.	• Check actual delivery head and pipe resistance.
	Pressure is low and vacuum is very low.	Both pressure and vacuum are low.	• The motor rotates in reverse.	• Interchange motor wiring.

Troubles	Symptom		Cause	Point to be checked & Countermeasures
	When a discharge valve is closed.	When a discharge valve is opened.		
The motor is overheated.			• Voltage has dropped greatly. • Overload • Surrounding temperature is too high.	• Check voltage or frequency. • Check specific gravity and viscosity of liquid. • Keep a good ventilation.
A flow rate has dropped suddenly.		Vacuum is high.	• A suction line clogs with foreign matters.	• Remove foreign matters.
The pump vibrates.			• The base is not anchored firmly. • Anchor bolts are loose. • Cavitation occurs. • Pump bearing is worn or failed. • Magnet capsule or impeller is broken. • Dynamic balance of drive magnet is upset. • Motor bearing is worn.	• Fix the base. • Retighten the bolts. • Remove the cause of cavitation. • Replace as necessary. • Replace as necessary. • Investigate problems and replace as necessary. • Replace bearing or a motor unit.

2. Maintenance & Inspection

⚠ WARNING

- **Access limitation**
  The magnet drive pump has a pair of strong magnets. The strong magnet field could adversely affect the persons who are assisted by electronic devices such as the pacemaker.
- **Do not catch the finger**
  The magnet force of the pump is powerful. Take care not to catch the finger in the frame.
- **Wear protective clothing**
  Always wear protective clothing such as an eye protection, chemical resistant gloves, a mask and a face shield during disassembly, assembly or maintenance work. The specific solution will dictate the degree of protection. Refer to SDS precautions from the solution supplier.
- **Turn off power before service**
  Risk of electrical shock. Be sure to turn off power to stop the pump and related devices before service is performed.

■ Daily inspection

1. Always check for leakage before pump operation. Do not run the pump when liquid leaks. Check if the drain cap is tight. Retighten as necessary.

2. Check whether the pump runs without abnormal noise or vibration.

3. Check a liquid level in a supply tank and a suction pressure.

4. Check that discharge capacity and a motor current value are as per specifications on the nameplate during operation.

NOTE A discharge pressure is in proportion to the specific gravity of liquid. The cock of the pressure gauge or vacuum gauge should be opened only when measurement is carried out. Close it right after measurement. If the cock remains open during pump operation, the meter mechanism may be adversely affected by the abnormal pressure rise caused by water hammer action.

5. If a spare pump is stored, run it from time to time to keep it ready for operation at any time when needed.

*6. Check discharge pressure, discharge capacity, and motor power supply voltage to see if they do not fluctuate during operation. See the "**1. Troubleshooting**" section as necessary.*

Maintenance

■ Periodic inspection

To ensure efficient and smooth operation, perform periodic inspection. Be careful not to damage internal sliding parts and plastic parts when the pump is disassembled.

The magnetic force of the drive magnet unit and magnet capsule assembly is strong. ***Be careful not to catch the finger. Do not put electrical devices such as a watch and mag card close to the magnets.***

Interval	Part names	Inspection items	Measures
Every six months (Maintain an inspection record)	(Drive magnet unit) Drive magnet Hex. socket set screw	● Wear trace ● If the drive magnet is correctly mounted by hex. socket set screws and they are not loose. ● Decentering of magnet and motor shaft (Max.1/10mm)	○ Finding wear trace, contact us. ○ Reset the drive magnet to the motor shaft and retighten the screws. ○ Retighten the hex. socket set screws or replace the drive magnet (Contact us).
	Rear casing Rear thrust	● Wear tracks on an inner surface ● Cracks ● Rear thrust wear degree ● Spindle end wear degree ● Contamination in rear casing	○ Contact us. ○ Replace as necessary. ○ Contact us. ○ Replace as necessary. ○ Remove contamination.
	(Magnet capsule assembly) Magnet capsule Bearing	● Wear tracks on the rear end or side face of the magnet capsule ● Cracks on the rear end or side face of the magnet capsule ● Bearing wear degree ● Loose fit of the impeller unit	○ Contact us. ○ Contact us. ○ Replace as necessary. ○ Replace or contact us.
	(Impeller unit) Impeller Mouth ring	● Mouth ring wear degree ● Cracks ● Evidence of cavitation (Wear or seizing on the mouth ring.) ● Contamination in the impeller ● Impeller deformation	○ Replace as necessary. ○ Replace as necessary. ○ Remove the cause of cavitation. ○ Remove contamination. ○ Replace as necessary.
	Front case Rear case Liner ring	● Contamination ● Cracks ● Wear degree, cracks and wear tracks on liner ring ● Drain port clogging ● Swelling or a crack on O ring ● Wear tracks on an unlikely portion	○ Remove contamination. ○ Replace as necessary. ○ Contact us. ○ Remove clogging ○ Replace as necessary. ○ Contact us.
	Spindle	● Cracks ● Wear degree	○ Replace as necessary. ○ Replace as necessary.
	Drain cap	● Loose fit	○ Retighten the cap.

■ Wear limits of bearing and spindle

*If the clearance between the inner diameter of the bearing and the outer diameter of the spindle exceeds 1 mm, either the bearing or spindle, whichever has greater wear, should be replaced regardless of the wear limit. For the ceramic bearing (FF) type, replace the bearing and spindle at the same time.

*Sliding parts may suffer initial wear in an initial operation phase. Note that this is not abnormal.

Model	MXM220/ 221/ 441/ 442		MXM542/ 543/ 545	
	Before use	Wear limit	Before use	Wear limit
Inner diameter of bearing	18mm	19mm	24mm	25mm
Outer diameter of spindle	18mm	17mm	24mm	23mm

See the disassembly and assembly pages for bearing replacement and spindle replacement.

■ Wear limit of mouth ring

The mouth ring is 2 mm forward from the impeller when shipped. Before the step has reduced to 0 mm, replace the mouth ring with new one.

Model	MXM220/ 221/ 441/ 442/ 542/ 543/ 545
Before use	7.5mm
Wear limit	5.5mm

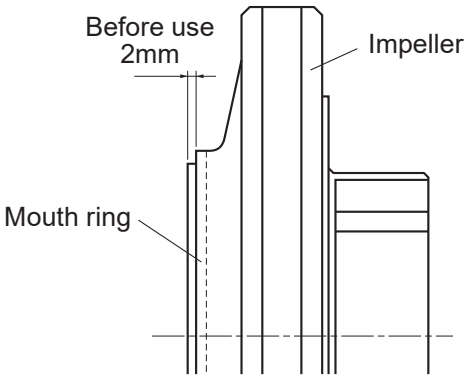

Mouth ring replacement

1. Heat the lugs on the mouth ring by a plastic welder or industrial dryer and open the lugs up to remove the mouth ring.

2. Heat the lugs on the mouth ring by a plastic welder or industrial dryer and then close the lugs down.

3. Disassembly & Assembly

⚠ WARNING

- **Access limitation**
  The magnet drive pump has a pair of strong magnets. The strong magnet field could adversely affect the persons who are assisted by electronic devices such as the pace-maker.
- **Do not catch the finger**
  The magnet force of the pump is powerful. Take care not to catch the finger in the frame.
- **Wear protective clothing**
  Coming in contact with a harmful chemical liquid may cause eye or skin trouble. Wear protective clothing such as a protective mask, goggles, gloves during work.
- **Turn off power during maintenance work**
  Risk of electrical shock. Make sure a power source is turned off, and the pump and devices are stopped prior to work.
- **Ventilation**
  Fumes or vapours can be hazardous with certain solutions. Also, a harmful fluorine gas is given off when a fluoroplastic part of this product is heated to a high temperature and eventually decomposed. Ensure proper ventilation at the operation site.

⚠ CAUTION

- **Pay attention to magnet force**
  The magnet force is powerful. Take care so that iron pieces and iron powder do not stick to the magnet of pump.
- A pair of strong magnets is mounted in the pump and its magnetic force may affect magnetic disks/cards or wrist watches. Do not bring them close to the pump.
- Risk of burning. Pump and pipe surface temperature rise high along with liquid temperature. Do not touch the pump or pipe surface directly in or right after operation.

Tool list

The following tools are necessary to disassemble and assemble the pump.

No.	Tools		Pump models					Q'ty
			MXM220	MXM221	MXM441/442	MXM542/543	MXM545	
1	Spanner	ND	13mm	17mm	17mm	17mm	19mm	1 each
		Size	M8	M10	M10	M10	M12	
2	Hex wrench	ND	5, 6mm	5, 6mm	5, 6, 8mm	5, 6, 8mm	5, 6, 8mm	1 each
		Size	M6/M8	M6/M8	M6/M8/M10	M6/M8/M10	M6/M8/M10	
3	Bearing press (plastic round bar)		ø24×50L		ø24×50L	ø34×50L		1 each
4	Plastic welder or industrial dryer		-	-	-	Needed	Needed	
5	Handpress		-					1
6	Plastic hammer		-					1
7	Drivers		-					1
8	Longnose pliers		-					1

■ Disassembly

1. Flush out chemical liquid from the pump by a flushing line. Then remove the drain cap to empty the pump.

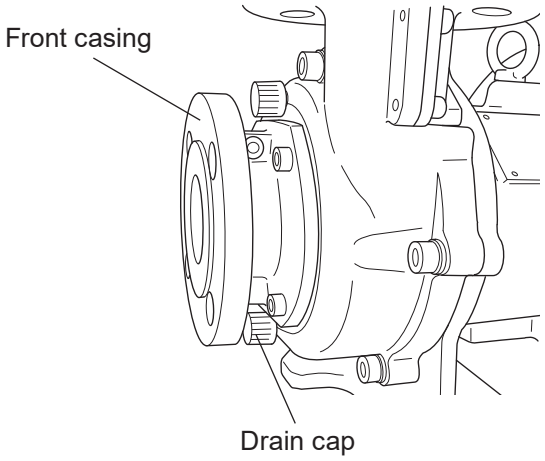

⚠WARNING

- Wear protective clothing such as goggles, rubber gloves, etc. during maintenance. Coming in contact with a harmful chemical liquid may cause eye or skin trouble.
- Solution in piping or the pump may be under pressure. Loosen the drain cap or bolts slowly to avoid solution spray.

⚠CAUTION

Make sure the pressure is removed from piping or the pump before disconnecting plumbing or disassembly of the pump.

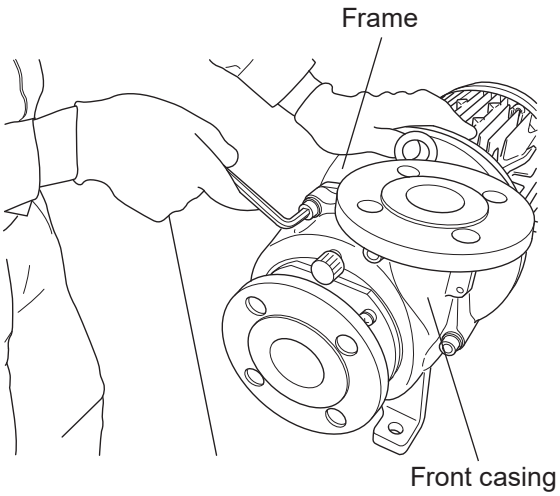

2. Remove hex. socket head bolts from the front casing to remove it from the frame. Try to pull out the front casing straight from the frame so as not to damage the spindle in it. The spindle may stay in the front casing after removal. In this case, take care not to lose the rear thrust.

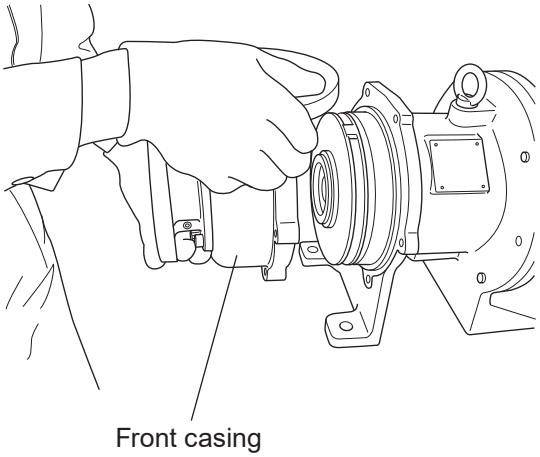

⚠CAUTION

A strong impact may crack the front casing. Be careful not to hit it.

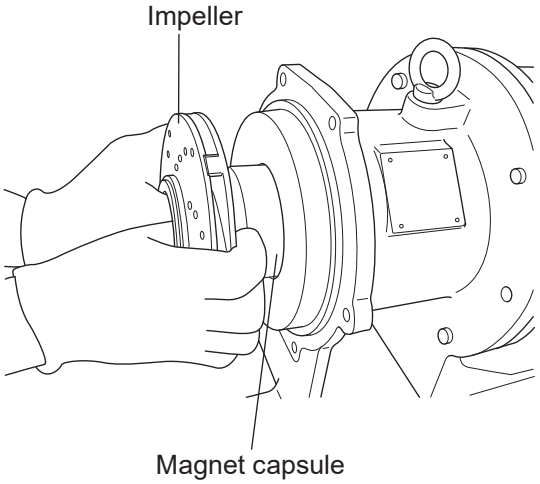

3. Pull out the impeller unit + the magnet capsule assembly. Be careful not to scratch each part. Note that the magnetic force of the magnet capsule assembly is strong. Keep it free from metal pieces or powder. Do not scratch any sliding or sealing surfaces.

⚠CAUTION
The magnetic force of the magnet capsule assembly is powerful. Be careful not to catch the finger in the impeller unit and the assembly.

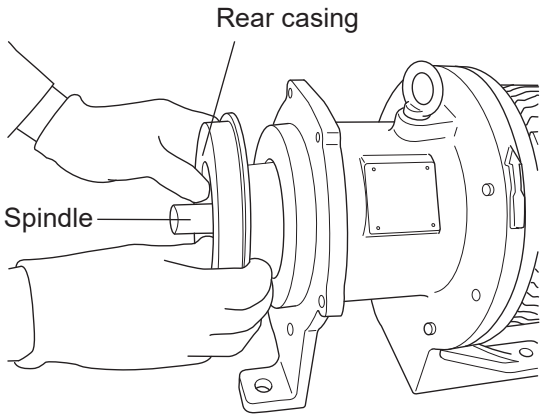

4. Insert a flat-head screwdriver between the rear casing and the frame. And then pull the rear casing forward while lifting it slightly up.
If the spindle stays on the front casing, remove it from the front casing. Fit the spindle to the rear casing with the rear thrust mated at the end. Always check the rear thrust is mated to the spindle before fitting spindle.
If the spindle can not be removed, warm a spindle connection with hot water (about 90°C) for 5 minutes and try again. Be careful not to be scalded.

⚠CAUTION
Be careful not to damage the sealing surface between the front casing and rear casing where crushes the O ring.

5. Detach the impeller unit from the magnet capsule assembly as necessary. Be careful not to damage the units.

a. MXM220/ 221/ 441/ 442

Slightly tap the back of impeller unit by plastics hammer while holding the magnet capsule assembly. If it is hard to remove, warm them in hot water (about 90°C) for 5 minutes.
Take care not to burn yourself.

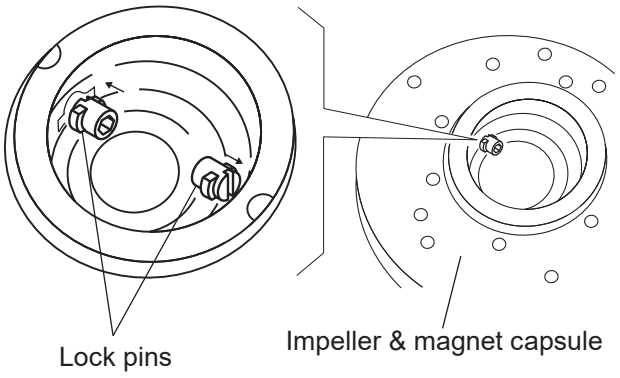

b. MXM542/ 543 /545

The impeller unit can not be separated from the magnet capsule assembly unless the lock pins are removed. Do not have an strong impact to the impeller unit before removing the pins.

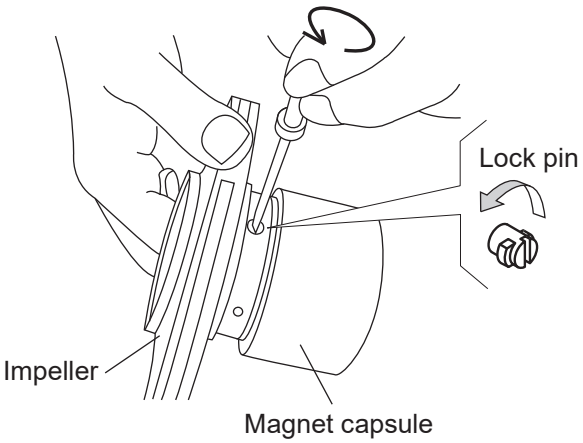

Turn the lock pins 90 degrees anticlockwise using a flathead screwdriver and then push it off. If it is hard to push it off, slightly tap the end of driver handle.

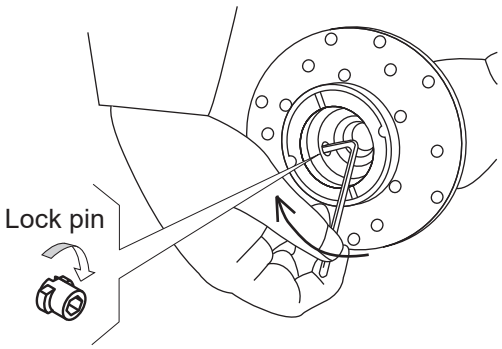

The lock pins can also be turned by using the 4mm hex. wrench from the inside of magnet capsule assembly. In this case turn the wrench clockwise. The lock pins will be damaged if it is turned in reverse direction. After unscrewing the pins, push it off from the outside by using a bar.

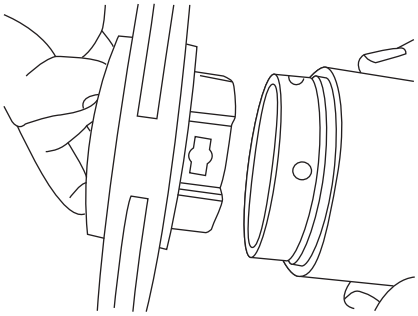

After the lock pins are removed, detach the impeller unit from the magnet capsule assembly by slightly tapping the back of the impeller unit with a plastic hammer. If the impeller unit is hardly removed, warm it in hot water (approx. 90°C) for 5 minutes and tap it slightly, again. Be careful not to scald in hot water.

To remove the bearing from the magnet capsule assembly, first separate the impeller unit from the assembly. Then use a hand press with plastic extruding bar to extrude the bearing toward impeller connection side.
To insert the bearing into the magnet capsule, reverse this procedure. If the bearing can not be removed, warm the magnet capsule assembly with hot water (about 90°C) for 5 minutes and try again. Be careful not to be scalded.

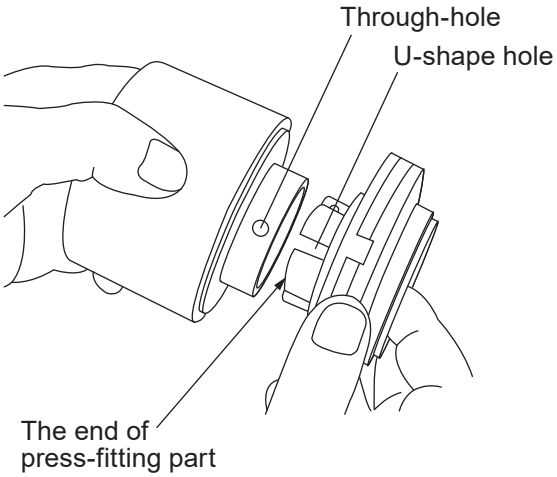

■ Assembly

1. Mount the impeller unit to the magnet capsule assembly.

a. MXM220/ 221/ 441/ 442

Press and fit the impeller unit into the magnet capsule assembly with the U-shape hole under the through hole.

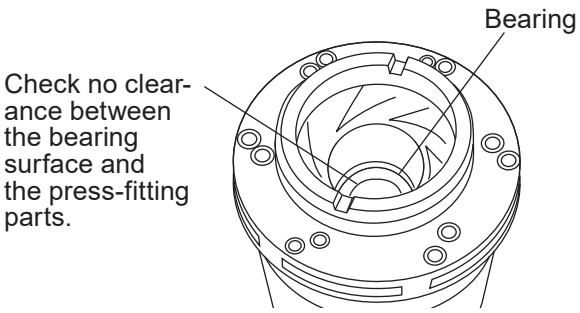

Check that the end of press-fitting parts has came at a bearing surface. If the impeller unit can not be fitted to the magnet capsule assembly, warm it in hot water (about 90°C for 5 minutes) for softening. Be careful not to get scalded with hot water.

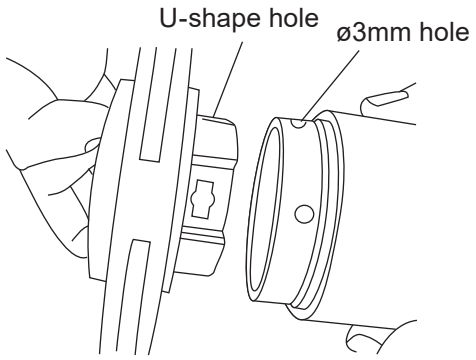

b. MXM542/ 543/ 545

Attach the impeller unit to the magnet capsule assembly.

The mating surface on the assembly has two holes. The large hole (Stepped holes with 6mm at outer dia. & 12mm at inner dia) is for the lock pins and the small hole (3mm dia.) is for cooling. Press the impeller unit into the magnet capsule assembly with U-shape hole under the smaller hole (3 mm dia.). If it is difficult to insert them, warm the magnet capsule assembly in the hot water (approx. 90°C) for 5 minutes. Be careful not to scald at this time.

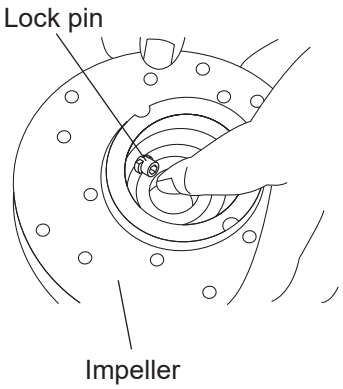

After fitting the impeller unit, push the lock pins into the lock pin holes from the inside as far as it will go.

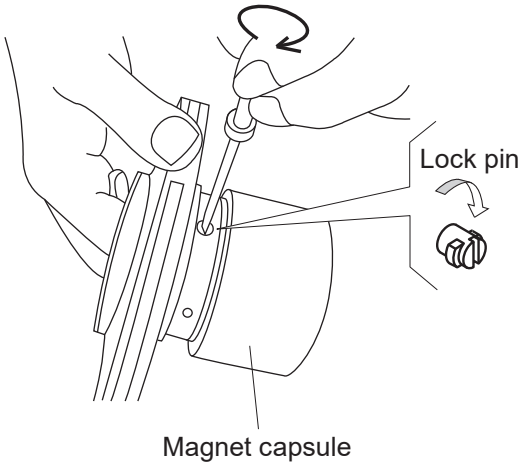

Use a flat-head screwdriver to turn the pins 90 degrees clockwise from the outside while holding the pins from the inside. Once it clicks, the impeller unit is secured.

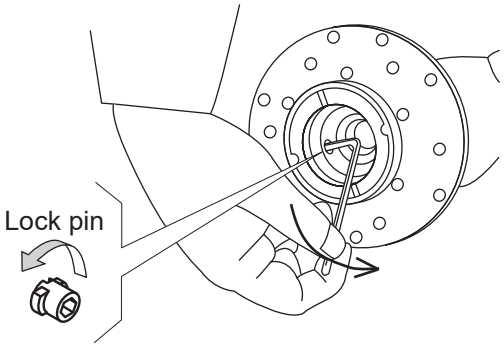

If the screw groove is deformed and can not be used, the pin can be turned from the inside with a 4mm hex. wrench. In this case pay attention to turn the wrench anticlockwise. The lock pin may be broken if it is turned in reverse.

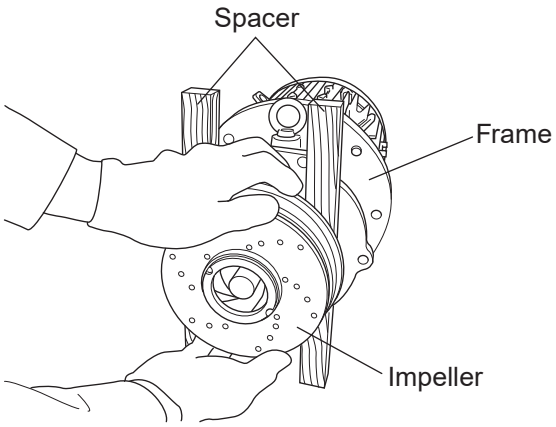

2. Insert the magnet capsule assembly plus the impeller unit into the rear casing slowly. Do not allow iron pieces to adhere to the magnet capsule assembly.

3. Mount the rear casing to the frame with the magnet capsule assembly in it.

⚠ CAUTION

Magnet force is very powerful. Apply plastic or wooden spacers between the rear casing and the frame so as not to catch the fingers.

4. Fit O ring to the front casing. Check that sealing surfaces are free of dust or scratches. Make sure that O ring is in place and will not be out of the groove.

⚠ CAUTION

Replace O ring and gasket with new ones at each time of replacement. Reusing old O ring and gasket could reduce seal performance and result in leakage.

5. Mount the front casing to the frame. Tighten the hex. socket bolts diagonally and equally. Tightening torque is shown below.

Model	Tightening torque	Bolt size
MXM220/221	12.5N•m	M8
MXM441/442/542/543/545	24.5N•m	M10

⚠ CAUTION

The hex. socket bolt length differs with each position. Be sure to select proper bolts to each position. Otherwise, leak or other failure may result.

6. Hand tighten the drain cap and check it is secured. Use a tightening tool such as pliers to give it further torque, especially before operation with a high-temperature or a high-pressure liquid. Be careful not to tighten it too much, or the plastic cap may break.

■ Drive magnet demounting

Take the following steps to demount the drive magnet from the motor.

- Remove the front casing from the frame.
- Remove the bolts (901.1) and the frame from the motor.
- Demount the drive magnet from the motor shaft.

■ Drive magnet mounting

1. Make sure the motor is electrically-disconnected in advance. If the motor were to run in this process, personal injury would result.

MXM220

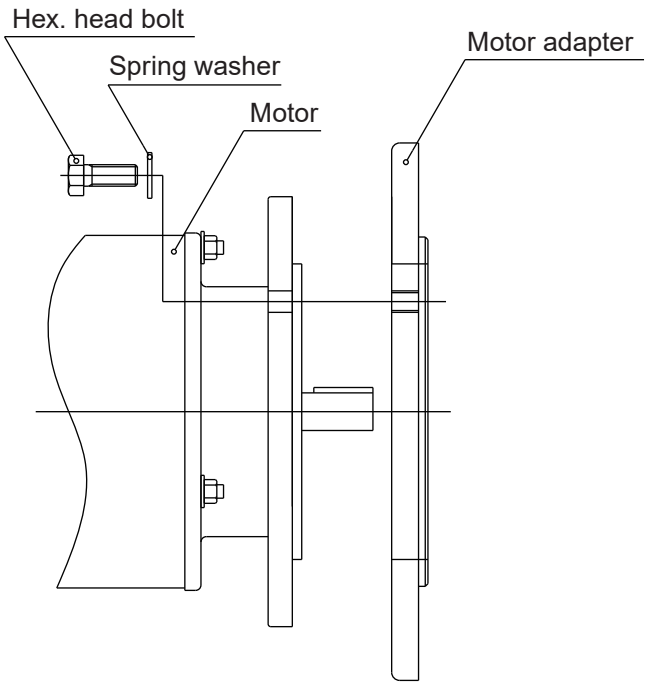

2. For the MXM220, fit the motor adapter to the motor in advance with four (4) M8×20 hexagon bolts and M8 washers.

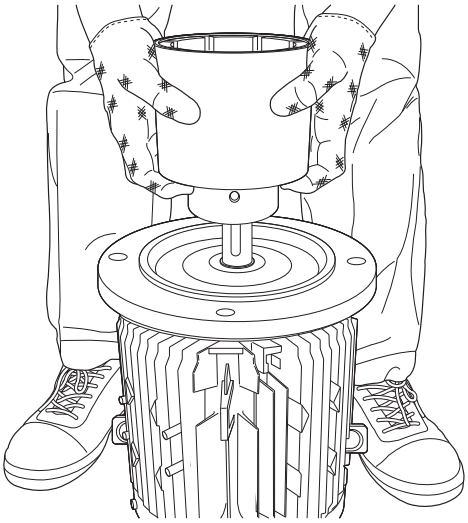

3. *Clean the motor shaft surface and the shaft hole of the drive magnet. Use a sand paper or sand blaster to remove burrs if necessary. Be careful not to drop the drive magnet, or it may break.*
4. *Adjust the depth of the hex. socket set screws in the drive magnet, so they will not hinder the insertion of the magnet to the motor shaft.*
5. *Mount the key to the motor shaft in place beforehand.*
6. *Slide the drive magnet down to the motor shaft until it bottoms out. If burrs or debris disturbs insertion, remove the drive magnet once and remove them. Also, adjust the key position if necessary.*

7. Check the dimension "H" is proper at each motor. Adjust the position of the drive magnet if necessary.

MXM220

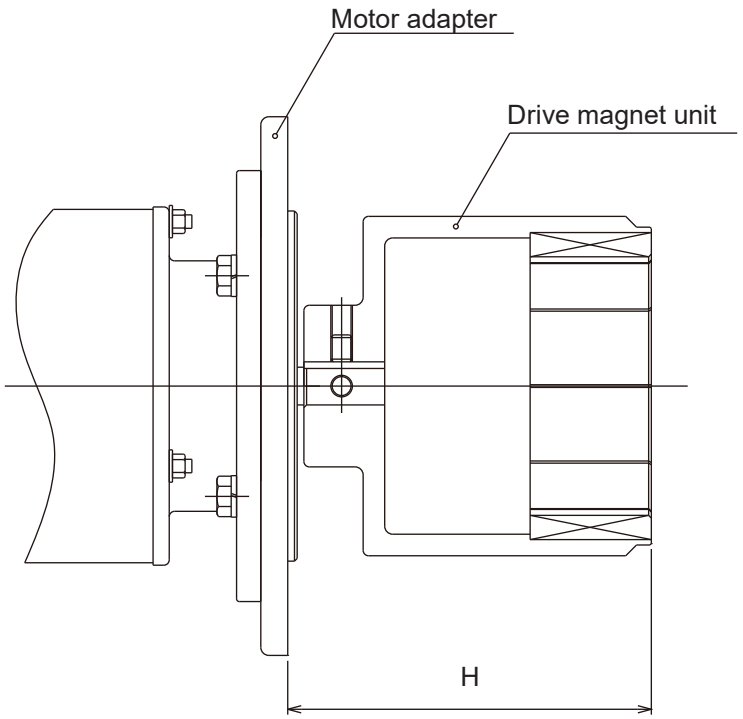

*MXM 44_ / 54_*

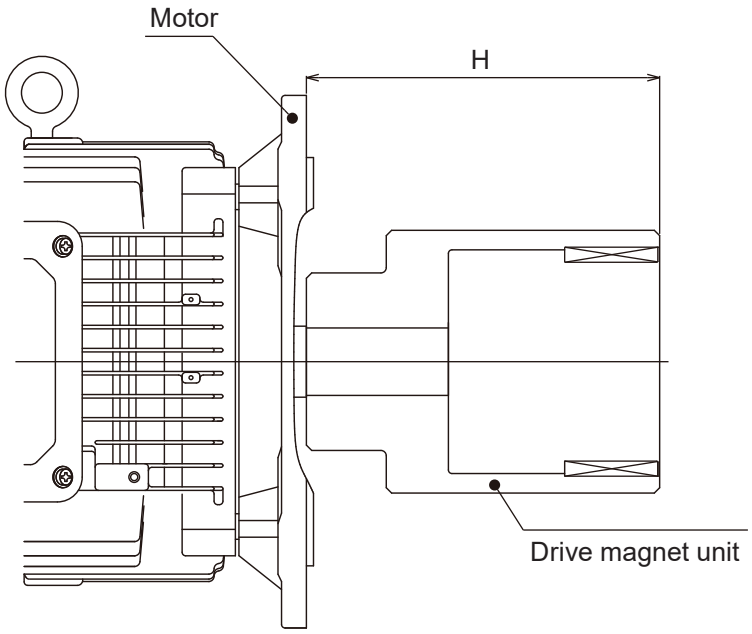

Model		Motor output [kW]	Poles	H [mm]
MXM	22	0.37/0.4	2	129
		0.75		119
	44	0.75		131
		1.5		123
	54	1.5		118
		2.2		123
		3.7/4.0		143

8. Tighten the hex. socket set screws by the rated torque shown below to fix the drive magnet position.

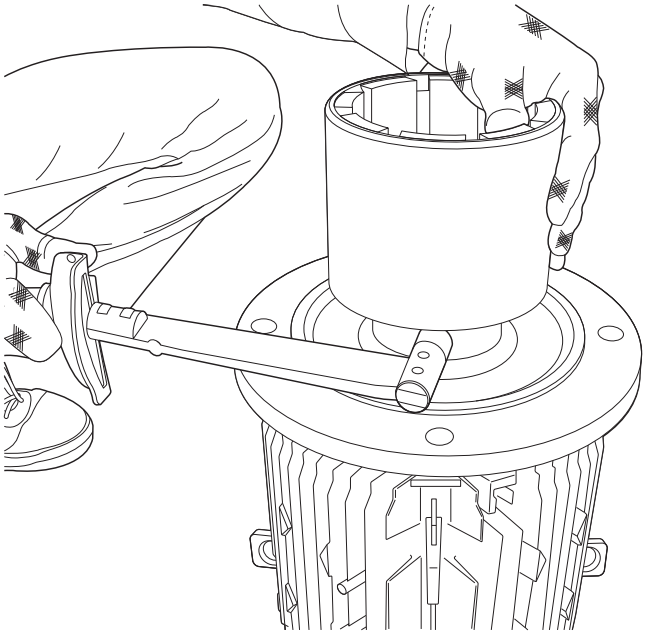

Motor output	Tightening torque	Adhesive application	Adhesive agent
All	12N•m	Not required	-

9. Check the drive magnet is fixed tight and won't loose the connection in operation.

10. Remount the frame to the motor.

NOTE: Always fit the "single" frame part to the motor, not the combination of the frame and the front casing (driven magnet). There is a very strong magnetic force between the drive magnet and the driven magnet. To reduce the risk of personal injury which could happen when both parts are unexpectedly and strongly pulled together, be sure to mount the frame first to the motor, and then the front casing (driven magnet) to the frame, on the step by step basis!

4. Spare & Wear parts

Appropriate spare parts are necessary for a long period of continuous operation. We recommend that wear parts be always in stock. Place an order for spares with the following information.

1. Part names and part number (see the diagram below.)
2. Pump model identification code and manufacturing number (see pump nameplate.)
3. Drawing number if you have our approval drawing

No.	Part names		Materials	Selection codes					
				MXM220	MXM221	MXM441	MXM442	MXM542/543	MXM545
210	Spindle	CF	High purity alumina ceramic	MXM0174				MXM0151	
		KK	SiC	MXM0175				MXM0002	
310	Bearing	CF	High density carbon	MXM0183				MXM0016	
		KK	SiC	MXM0185				MXM0017	
210 + 310	Bearing, Spindle set	FF	High purity alumina ceramic	MXM0365				MXM0371	
314.2	Mouth ring	CF/FF	Filled PTFE	MXM204				MXM0063	
		KK	SiC	MXM205				MXM0064	
314.3	Rear thrust		CFRETFE	MXM0176				MXM0003	
859 + 310	Magnet capsule assembly	CF	CFRETFE + High density carbon	MXM0177	MXM0178		MXM0267	MXM0004	MXM0012
		KK	CFRETFE + SiC	MXM0181	MXM0182		MXM0269	MXM0005	MXM0013
859 + 310 + 210	Magnet capsule assembly, spindle set	FF	CFRETFE + Highly purity alumina ceramic	MXM0361	MXM0362		MXM0363	MXM0368	MXM0369
400.1	O ring		FKM	MXM0218		MXM0305		MXM0006	
			EPDM	MXM0220		MXM0306		MXM0007	
			AFLAS®	MXM0221		MXM0307		MXM0008	
			DAI-EL PERFLUOR®	MXM0217		MXM0308		MXM0014	
400.2	Gasket		FKM	MXM0009					
			EPDM	MXM0010					
			AFLAS®	MXM0011					
			DAI-EL PERFLUOR®	MXM0015					

MXM22

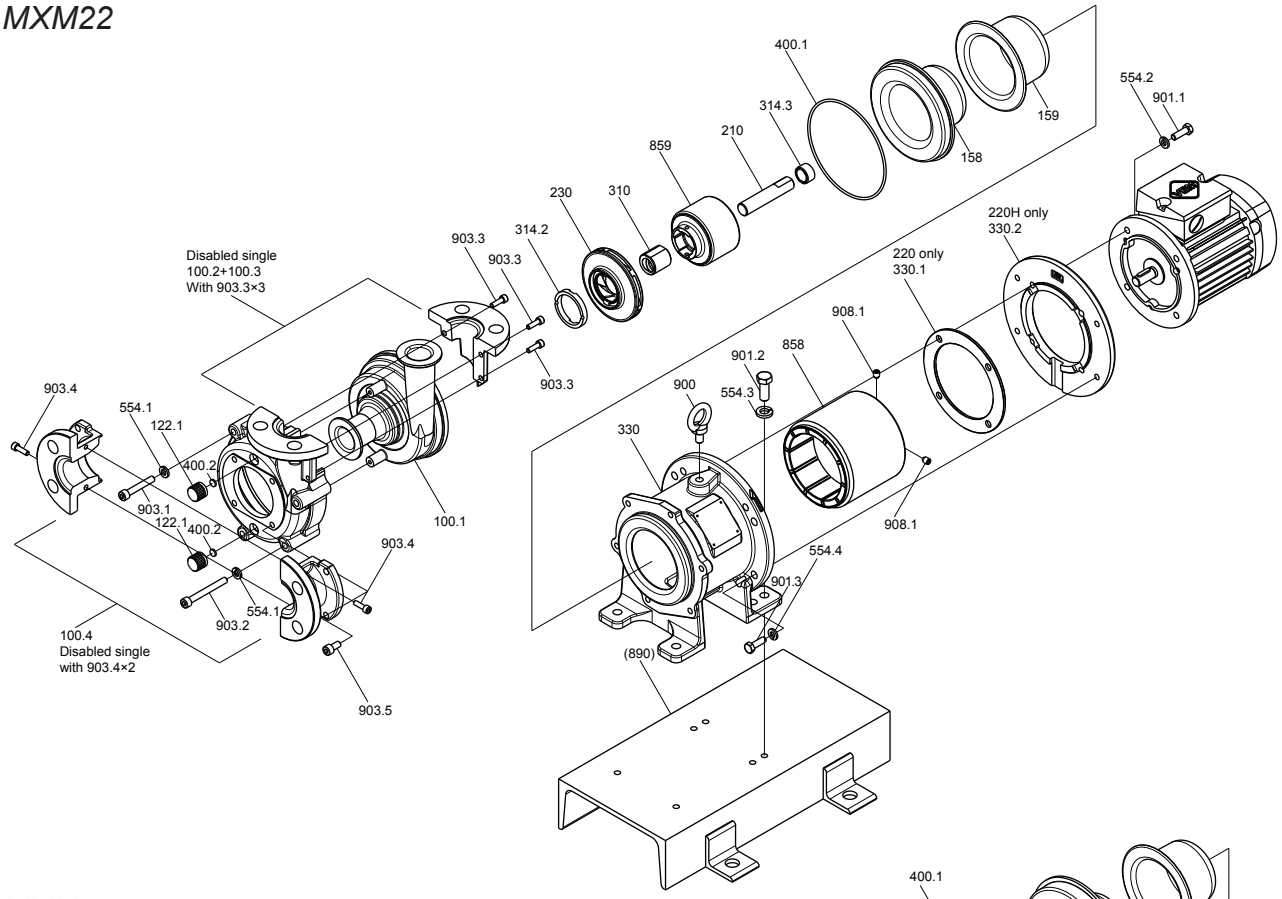
400.1
554.2
901.1
314.3
210
159
158
859
230
310
314.2
903.3
903.3
220H only
330.2
Disabled single
100.2+100.3
With 903.3×3
220 only
330.1
908.1
858
901.2
900
554.3
330
903.4
554.1
122.1
400.2
903.1
122.1
400.2
100.1
908.1
903.4
554.4
901.3
554.1
903.2
100.4
Disabled single
with 903.4×2
(890)
903.5

MXM44

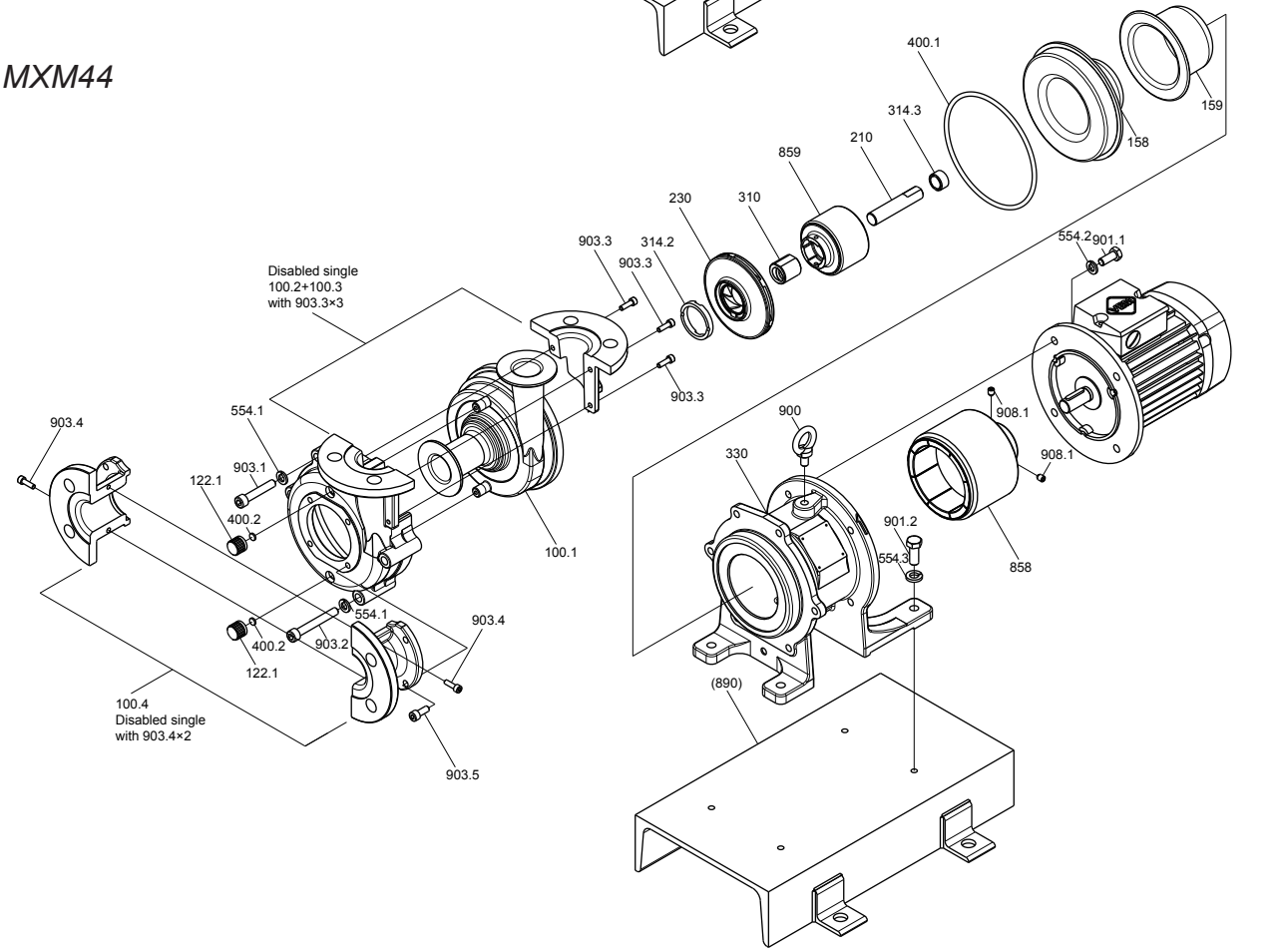
400.1
159
314.3
158
210
859
230
310
554.2
901.1
903.3
314.2
903.3
Disabled single
100.2+100.3
with 903.3×3
903.3
908.1
900
330
908.1
903.4
554.1
903.1
122.1
400.2
100.1
901.2
554.3
858
554.1
903.4
400.2
903.2
122.1
100.4
Disabled single
with 903.4×2
(890)
903.5

MXM54

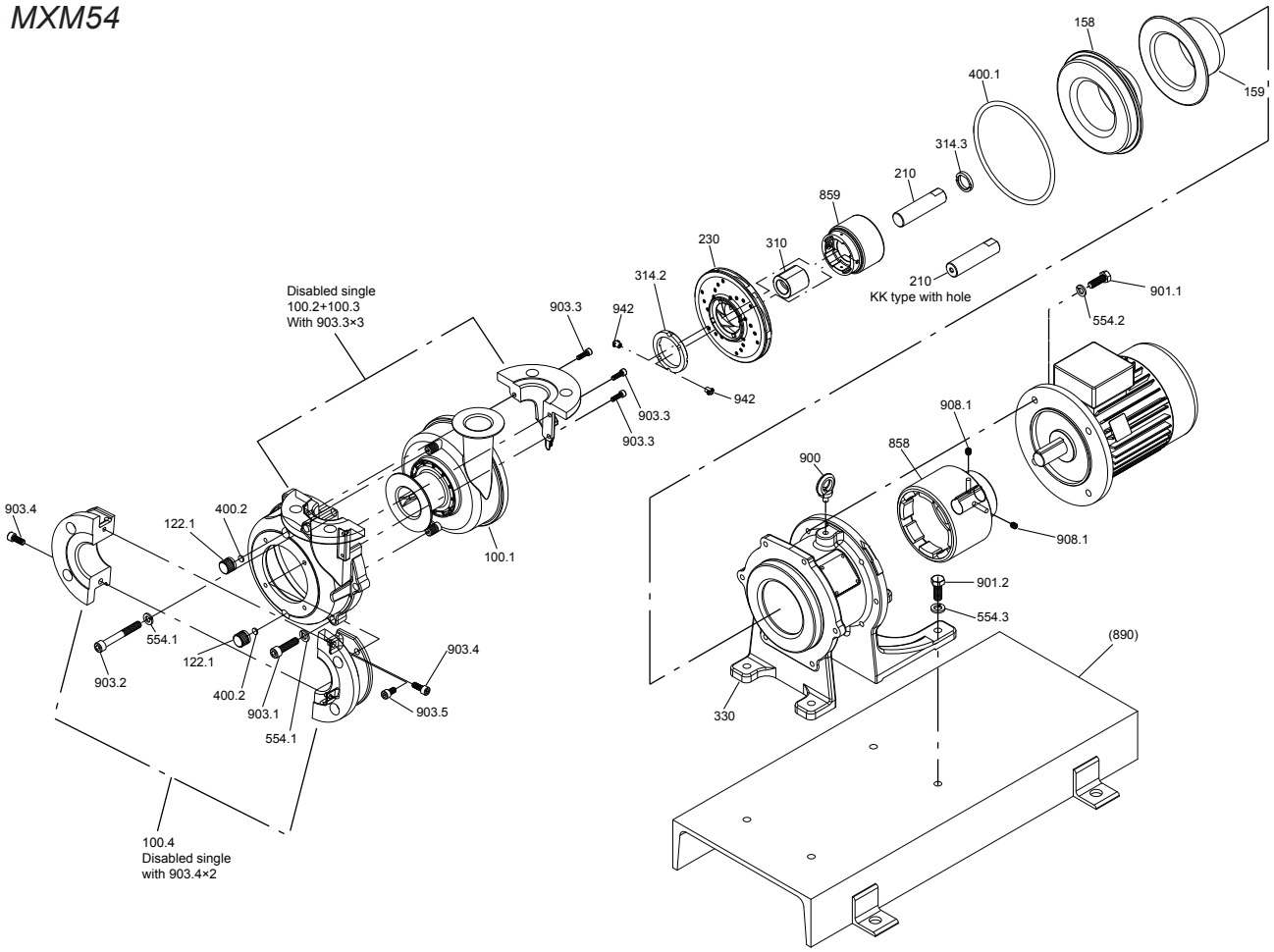
158
159
400.1
314.3
210
859
230
310
210
KK type with hole
901.1
554.2
314.2
942
903.3
942
903.3
903.3
Disabled single
100.2+100.3
With 903.3×3
908.1
858
900
908.1
901.2
554.3
(890)
330
903.4
122.1
400.2
554.1
903.2
122.1
400.2
903.1
554.1
903.4
903.5
100.1
100.4
Disabled single
with 903.4×2

5. Mass of pumps

The table below shows the pump weight at each model. The motor weight is not included.

Model code	Motor output	Spec	Pump with no base	Pump with base
MXM220	0.4kW	High temp type	20kg	35kg
MXM221	0.75kW	High temp type	40kg	55kg
MXM441/442	0.75kW/1.5kW	High temp type	25kg	40kg
MXM542/543	1.5kW/2.2kW	High temp type	25kg	55kg
MXM545	3.7kW	High temp type	30kg	60kg

*The pump weights represent the pump unit only and do not include the motor weight.

*Some pump models have more weight (a larger frame) to have a flame-proof motor or an increased-safety explosion-proof motor.

*See our approval drawing of the pump plus motor as well for total weight information.

EC DECLARATION OF CONFORMITY

A copy of the original Declaration of Conformity

(SUPPLIER'S NAME)

WE

IWAKI CO.,LTD.

(ADDRESS)

6-6 2-CHOME KANDA-SUDACHO CHIYODA-KU TOKYO JAPAN

(PRODUCT)

DECLARE UNDER OUR SOLE RESPONSIBILITY THAT THE PRODUCTS

MAGNETIC DRIVE PUMP

(MODEL NAME)

MXM SERIES

TO WHICH THIS DECLARATION RELATES ARE IN CONFORMITY

WITH THE FOLLOWING STANDARDS OR DIRECTIVES AS FAR AS APPLICABLE

(DIRECTIVES)

MACHINERY DIRECTIVE 2006/42/EC (ANNEX IIA)
RoHS DIRECTIVE 2011/65/EU

(STANDARDS)

EN ISO12100: 2010 EN809: 1998 + A1: 2009 EN IEC63000: 2018

(A PERSON WHO IS AUTHORISED TO COMPILE THE TECHNICAL FILE IN THE COMMUNITY)

IWAKI EUROPE GMBH
SIEMENSRING 115 D-47877 WILLICH GERMANY

NOTE: THIS DECLARATION BECOMES INVALID IF TECHNICAL OR OPERATIONAL MODIFICATIONS ARE INTRODUCED WITHOUT THE MANUFACTURER'S CONSENT.

T. Sawada.

TSUTOMU SAWADA

DEPUTY SENIOR GENERAL MANAGER,

QUALITY ASSURANCE HEAD OFFICE

Tokyo, Sep. 2, 2021

(PLACE AND DATE OF ISSUE) **(NAME AND SIGNATURE OR EQUIVALENT MARKING OF AUTHORIZED PERSON)**

DOCUMENT NO. IS-51K-497-6

UK DECLARATION OF CONFORMITY

A copy of the original Declaration of Conformity

(SUPPLIER'S NAME)

WE

IWAKI CO.,LTD.

(ADDRESS)

6-6 2-CHOME KANDA-SUDACHO CHIYODA-KU TOKYO JAPAN

(PRODUCT)

DECLARE UNDER OUR SOLE RESPONSIBILITY THAT THE PRODUCTS

MAGNETIC DRIVE PUMP

(MODEL NAME)

MXM SERIES

TO WHICH THIS DECLARATION RELATES ARE IN CONFORMITY WITH THE FOLLOWING REGULATIONS OR STANDARDS AS FAR AS APPLICABLE

(REGULATIONS)

S.I. 2008/1597 SUPPLY OF MACHINERY (SAFETY)
S.I. 2012/3032 RESTRICTION OF HAZARDOUS SUBSTANCES

(STANDARDS)

EN ISO12100: 2010 EN809: 1998 + A1: 2009 EN IEC63000: 2018

(A PERSON WHO IS AUTHORISED TO COMPILE THE TECHNICAL FILE IN THE GB MARKET)

SENSYS LIMITED
UNIT 9 POND CLOSE WALKERN ROAD
STEVENAGE HERTS SG1 3QP UK

NOTE: THIS DECLARATION BECOMES INVALID IF TECHNICAL OR OPERATIONAL MODIFICATIONS ARE INTRODUCED WITHOUT THE MANUFACTURER'S CONSENT.

T. Sawada.

TSUTOMU SAWADA
SENIOR GENERAL MANAGER,
QUALITY ASSURANCE HEAD OFFICE

Tokyo, Jun. 6, 2023

(PLACE AND DATE OF ISSUE) **(NAME AND SIGNATURE OR EQUIVALENT MARKING OF AUTHORIZED PERSON)**

DOCUMENT NO. IS-51K-592-1

CE/UKCA conformity

■ **Information on CE/UKCA conformity of pump units when the motor is fitted by the customer (dealer/operator)**

We hereby confirm the CE/UKCA conformity of our pump unit provided that the following criteria about intended use are satisfied as described in this instruction manual:

- Motor conformity in accordance with any relevant EC directives/UKCA regulations which are currently effective.
- The dimensions of a required motor flange and shaft must fit the specified pump.
- The motor must be installed to the pump according to this instruction manual.
- Guaranteed grounding
- The pump must not be repainted over our original upper coating.

Any reseller or dealer who connects the pump with a motor and markets it as a complete unit must conform to all relevant EC directives/UKCA regulations. In such cases, the reseller or dealer then becomes the manufacturer.

Waste Electrical and Electronic Equipment (WEEE)

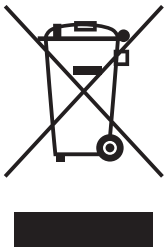

In accordance with the European Directive 2012/19/EU on waste electrical and electronic equipment, this product features the crossed-out wheelie bin symbol. When this product is disposed of in household wastes, toxic components included in it can cause major environmental and human health problems. Use appropriate waste collection systems for recovery and recycling. Contact your local distributor or nearest Iwaki company for the detailed collection systems.

https://www.iwakipumps.jp
IWAKI CO.,LTD. 6-6 Kanda-Sudacho 2-chome Chiyoda-ku Tokyo 101-8558 Japan
TEL: +81 3 3254 2935 FAX: +81 3 3252 8892

European Headquarter / IWAKI Europe GmbH
TEL: +49 2154 9254 0 FAX: +49 2154 9254 48
Germany / IWAKI Europe GmbH
TEL: +49 2154 9254 50 FAX: +49 2154 9254 55
The Netherlands / IWAKI Europe GmbH (Netherlands Branch)
TEL: +31 74 2420011 FAX: +49 2154 9254 48
Italy / IWAKI Europe GmbH (Italy Branch)
TEL: +39 0445 561219 FAX: +39 0445 569088
Spain / IWAKI Europe GmbH (Spain Branch)
TEL/FAX: +34 934 741 638
Poland / IWAKI Europe GmbH (East Europe Branch)
TEL: +48 12 347 0755 FAX: +48 12 347 0900
Denmark / IWAKI Nordic A/S
TEL: +45 48 242345
Finland / IWAKI Suomi Oy
TEL: +358 10 201 0490
Norway / IWAKI Norge AS
TEL: +47 23 38 49 00
Sweden / IWAKI Sverige AB
TEL: +46 8 511 72900
Belgium / IWAKI Belgium N.V.
TEL: +32 13 670200 FAX: +32 13 672030
France / IWAKI France S.A.
TEL: +33 1 69 63 33 70 FAX: +33 1 64 49 92 73
U.S.A. / IWAKI America Inc.
TEL: +1 508 429 1440 FAX: +1 508 429 1386
Brazil / IWAKI Do Brasil Comercio De Bombas Hidraulicas LTDA.
TEL/FAX: +55 19 3244 5900
China (Shanghai) / IWAKI Pumps (Shanghai) Co., Ltd.
TEL: +86 21 6272 7502 FAX: +86 21 6272 6929
China (Hong Kong) / IWAKI Pumps Co., Ltd.
TEL: +852 2607 1168 FAX: +852 2607 1000
China (Guangzhou) / GFTZ IWAKI Engineering & Trading Co., Ltd.
TEL: +86 20 84350603 FAX: +86 20 84359181
China (Shenzhen) / IWAKI Pumps (Shenzhen) Co., Ltd.
TEL: +86 0755 8656 3696
Singapore / IWAKI Singapore Pte Ltd.
TEL: +65 6316 2028 FAX: +65 6316 3221
Indonesia / IWAKI Singapore Pte Ltd. (Indonesia Office)
TEL: +62 21 6906606 FAX: +62 21 6906612
Malaysia / IWAKIm SDN. BHD.
TEL: +60 3 7803 8807 FAX: +60 3 7803 4800
Korea / IWAKI Korea Co., Ltd.
TEL: +82 2 6238 4800 FAX: +82 2 6238 4801
Taiwan / IWAKI Pumps Taiwan Co., Ltd.
TEL: +886 2 8227 6900 FAX: +886 2 8227 6818
Thailand / IWAKI (Thailand) Co., Ltd.
TEL: +66 2 322 2471 FAX: +66 2 322 2477
Australia / IWAKI Pumps Australia Pty Ltd.
TEL: +61 2 9899 2411 FAX: +61 2 9899 2421

T591-16 '26/09