IWAKI PUMPS

IWAKI
Self-priming Magnetic Drive Pump

SMX Series

Instruction Manual

⚠Read this manual before use of product

Thank you for selecting an Iwaki SMX Series Self-priming Magnetic Drive Pump. This instruction manual deals with *"Safety instructions"*, *"Outline"*, *"Installation"*, *"Operation"* and *"Maintenance"* sections. Please read through this manual carefully to ensure the optimum performance, safety and service of your pump.

Contents

Important instructions ····· **1**

Safety instructions ····· **2**

Outline 1. Unpacking & Inspection 6
2. Product outline 7
3. Model code 7
4. Part names 8

Installation 1. Before installation 12
2. Installation location 13
3. Installation 13
4. Pipework 14
5. Wiring 17

Operation 1. Operational precautions 19
2. Before operation 20
3. Preparation 21
4. Operation 22

Maintenance 1. Troubleshooting 25
2. Maintenance & Inspection 26
3. Spare & Wear parts 30
4. Disassembly & Assembly 33
5. Mass of pumps 48

EC DECLARATION OF CONFORMITY 49
UK DECLARATION OF CONFORMITY 50
CE/UKCA conformity 51
Waste Electrical and Electronic Equipment (WEEE) 51

This instruction manual should be kept on hand by the end user for quick reference.
Contact us or your nearest dealer if you have any questions.

Important instructions

For the Safe and Correct Handling of the Pump

- "Safety Instruction" section deals with important details about handling of the product. Before use, read this section carefully for the prevention of personal injury or property damage.
- Observe the instructions accompanied with "WARNING" or "CAUTION" in this manual. These instructions are very important for protecting users from dangerous situations.
- The symbols on this instruction manual have the following meanings:

⚠ **WARNING**	**Nonobservance or misapplication of “Warning” sections could lead to a serious accident which may result in death.**
⚠ **CAUTION**	**Nonobservance or misapplication of “Caution” sections could lead to personal injury or property damage.**

Types of Symbols

⚠ Indicates that “Warning” or “Caution” must be exercised. Inside this triangle, a concrete and practical image provided as a warning or caution message is depicted.

⃠ Indicates a prohibited action or procedure. Inside or near this circle, a concrete and practical image of the activity to be avoided is depicted.

❗ Indicates an important action or procedure which must be performed or carried out without fail. Failure to follow the instructions herein can lead to malfunction or damage to the pump.

⚠ Export Restrictions

Technical information contained in this instruction manual might be treated as controlled technology in your countries, due to agreements in international regime for export control. Please be reminded that export license/permission could be required when this manual is provided, due to export control regulations of your country.

Safety instructions

⚠ WARNING

- **Access limitation**

  The magnet drive pump has a pair of strong magnets (the magnet capsule unit and drive magnet). The strong magnet field could adversely affect the persons who are assisted by electronic devices such as the pacemaker.

Prohibited

- **Turn off power before service**

  Risk of personal injury. Before performing any service, turn off power to stop the pump and related devices and display a warning sign near the power switch to prevent others from restoring power during service.

Turning off power

- **Wear protective clothing**

  Always wear protective clothing such as an eye protection, chemical resistant gloves, a mask and a face shield during disassembly, assembly or maintenance work. The specific solution will dictate the degree of protection. Refer to SDS precautions from the solution supplier.

Wear protection

- **Do not modify the pump**

  Alterations to the pump carry a high degree of risk. It is not the manufacturer's responsibility for any failure or injury resulting from alterations to the pump.

Do not rework or alter

- **Daily inspection and maintenance**

  Daily inspection and maintenance are required for the prevention of chemical spray or leakage when handling:
  - Explosive or flammable liquid,
  - Corrosive liquid, or
  - Harmful liquid.

  Gas may accumulate in the upper part of the front casing.

Requirement

Safety instructions

⚠ CAUTION

- **Pay attention to magnet force**
  The pair of strong magnets in the pump and its magnetic force may adversely affect magnetic disks/cards or wrist watches. Do not bring them close to the pump.

Prohibited

- **Qualified personnel only**
  The pump should be handled or operated by qualified personnel with a full understanding of the pump. Any person not familiar with the product should not take part in the operation or management of the pump. If necessary, provide training to operators.

Prohibited

- **Do not use the pump in any condition other than its intended purpose**
  The use of the pump in any conditions other than those clearly specified may result in failure or injury. Use this product in specified conditions only.

Prohibited

- **Use specified power only**
  Do not apply power other than that specified on the nameplate. Otherwise, failure, fire or electrical shock may result. Ensure the pump is properly grounded.

Prohibited

- **Ventilation**
  Fumes or vapours can be hazardous with certain solutions. Ensure proper ventilation at the operation site.

Requirement

- **Spill precautions**
  Ensure protection and containment of solution in the event of plumbing or pump damage (secondary containment). Do not drain the liquid onto the floor.

Requirement

- **Do not run pump dry**
  Do not run pump dry (operation without priming water or with a suction valve closed). Internal parts are excessively worn by friction heat and fatal pump damage results.

Prohibited

- **Do not operate the pump in a flammable atmosphere**
  Do not place explosive or flammable material near the pump.

Fire ban

- **When unpacking a wooden box**
  Be careful not to be injured by nails or wood debris.

Caution

- **Do not lift the pump by holding any plastic parts (pump unit, flange, or base)**
  If a plastic part breaks, the pump may fall, resulting in serious injury.

Prohibited

Safety instructions

⚠ CAUTION

- **Do not stand on the pump**
  Injury or damage may result when the pump turns over.

Prohibited

- **Do not touch the pump or pipe with bare hands**
  Risk of burns. The surface temperature of the pump or piping becomes very high during and immediately after operation, depending on the liquid temperature.

Prohibited

- **Grounding**
  Risk of electric shock! Always properly ground the pump. Conform to local electric codes.

Earthing

- **Install a GFCI (earth leakage breaker)**
  An electrical failure of the pump may adversely affect other devices on the same line. Purchase and install an earth leakage breaker separately.

Requirement

- **Do not install/store the pump:**
  - In a flammable/explosive/corrosive atmosphere.
  - In a dusty/humid environment.
  - Where ambient temperature can exceed 0-40ºC.
  - Where ambient humidity can exceed 35-85%RH.
  - In direct sunlight or wind & rain (except an outdoor type)
  - Under mechanical vibrations.

Prohibited

- **Remove foreign matter**
  If foreign matter enters the pump, turn off the power and clean the pump. Otherwise, the pump may be damaged.

Caution

- **Static electricity**
  When low electric conductivity liquids such as ultra-pure water and fluor inactive liquid (e.g. Fluorinert™) are handled, static electricity may be generated in the pump and may cause static discharge. Take countermeasures to remove static electricity.

Requirement

- **Disposal of a used pump**
  Remove the liquid and flush it out before the pump is disconnected from piping. Dispose of any used or damaged pump and the removed liquid in accordance with local rules and regulations. See page 51 to comply with the European Directive 2012/19/EU on waste electrical and electronic equipment.

Requirement

Outline

1. Unpacking & Inspection 6

2. Product outline 7

3. Model code 7

4. Part names 8

Outline

1. Unpacking & Inspection

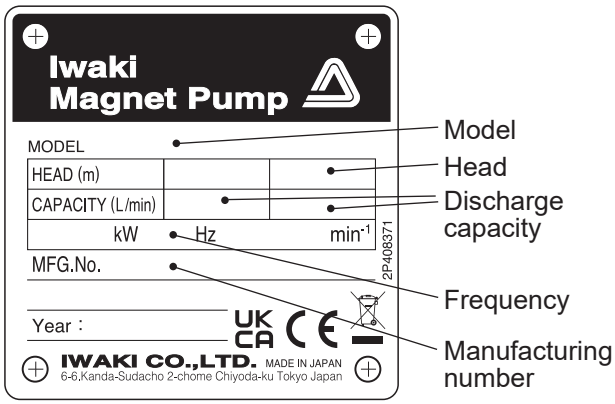

*The CE/UKCA markings on our product(s) are for us to market the product(s) into the European Union market / the Great Britain (England, Wales and Scotland) market, however, the CE/UKCA markings do not ensure any safety or conformity of the product(s) outside the EU/GB markets. When the pump is incorporated into the equipment marketed in the EU/GB markets, such equipment must meet all the requirements of applicable directives/regulations. In such a case, any person who places the equipment on the markets must carry CE/UKCA marks on the equipment as a manufacturer.

Open the package and check that the product conforms to your order. If any problem or inconsistency is found, immediately contact your distributor.

1. Check the nameplate to see if the information such as model codes, discharge capacity, discharge pressure and stroke rate are as ordered.
2. Check for transit damage, deformation, and loose bolts.

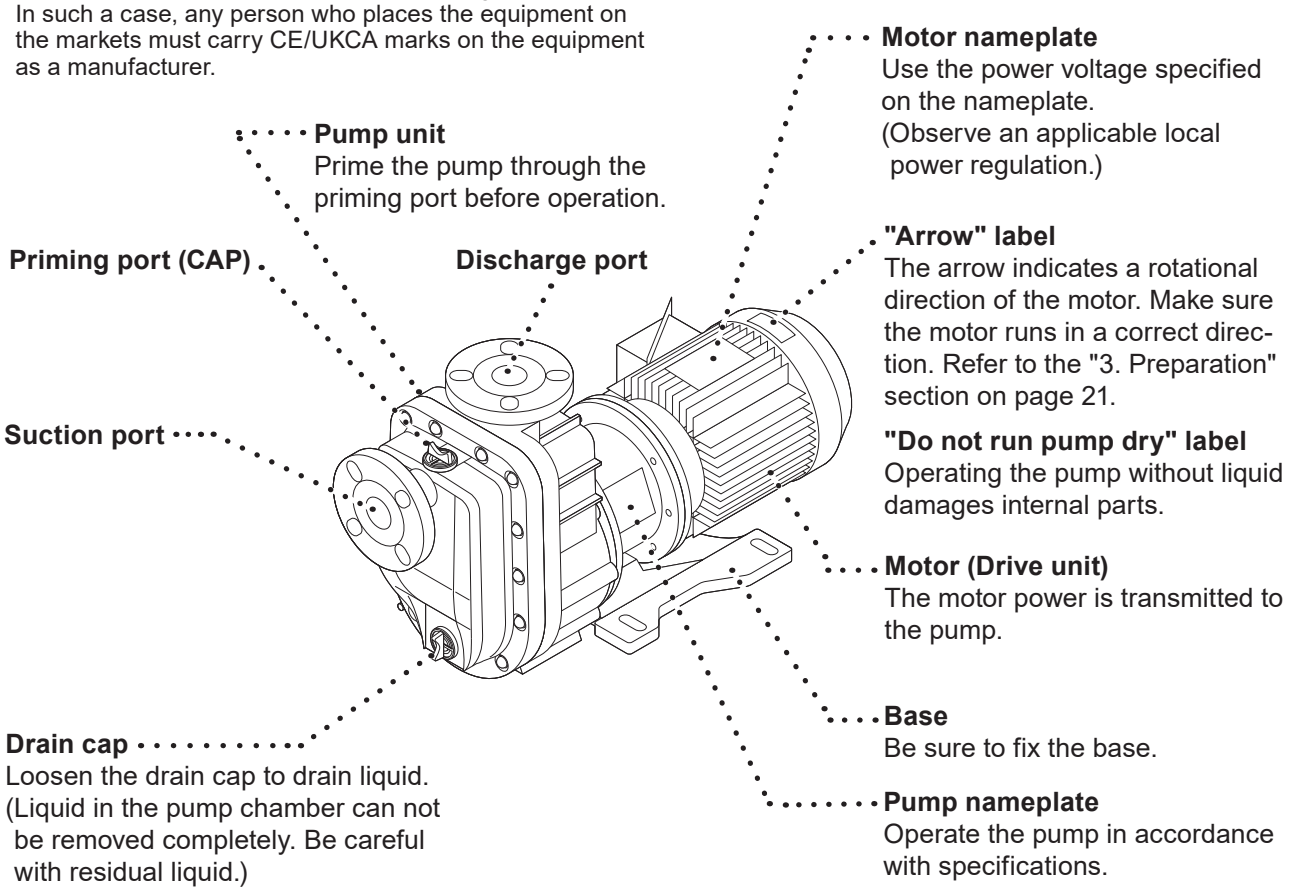

⚠CAUTION
Do not clean the pump or nameplate with a solvent such as benzine or thinner. This may discolour the pump or erase printing. Use a dry or damp cloth or a neutral detergent.

2. Product outline

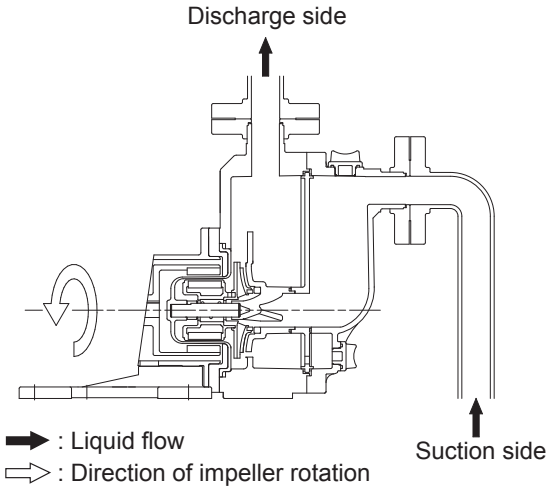

The SMX series pump is a self-priming centrifugal pump and is driven by magnetic force. Magnetic force rotates an impeller unit in the rear case in order to transfer liquid.

3. Model code

SMX - 44 2 CA V V C

a b c d e f g

a. Series

SMX: Wet end material: GFRPP

b. Pump I.D. (Inlet × Outlet)

22: 25A × 25A
44: 40A × 40A
54: 50A × 40A

c. Motor output

0: 0.4kW (0.37kW)
1: 0.75kW
2: 1.5kW
3: 2.2kW
5: 3.7kW (4.0kW)

d. Bearing/ Spindle/ Liner ring

CA: Carbon/ High purity alumina ceramic/ Alumina ceramic
RA: Filled PTFE/ High purity alumina ceramic/ Alumina ceramic
KA: SiC/ SiC/ Alumina ceramic

e. O ring and Gasket material

V: FKM
E: EPDM

f. Impeller

T, V : 50Hz
X, Y, Z: 60Hz

g. Motor

No code: Totally-enclosed-fan-cooled motor for indoor use
C: Totally-enclosed-fan-cooled motor for outdoor use
A: Increased safety for outdoor use

4. Part names

SMX-22□

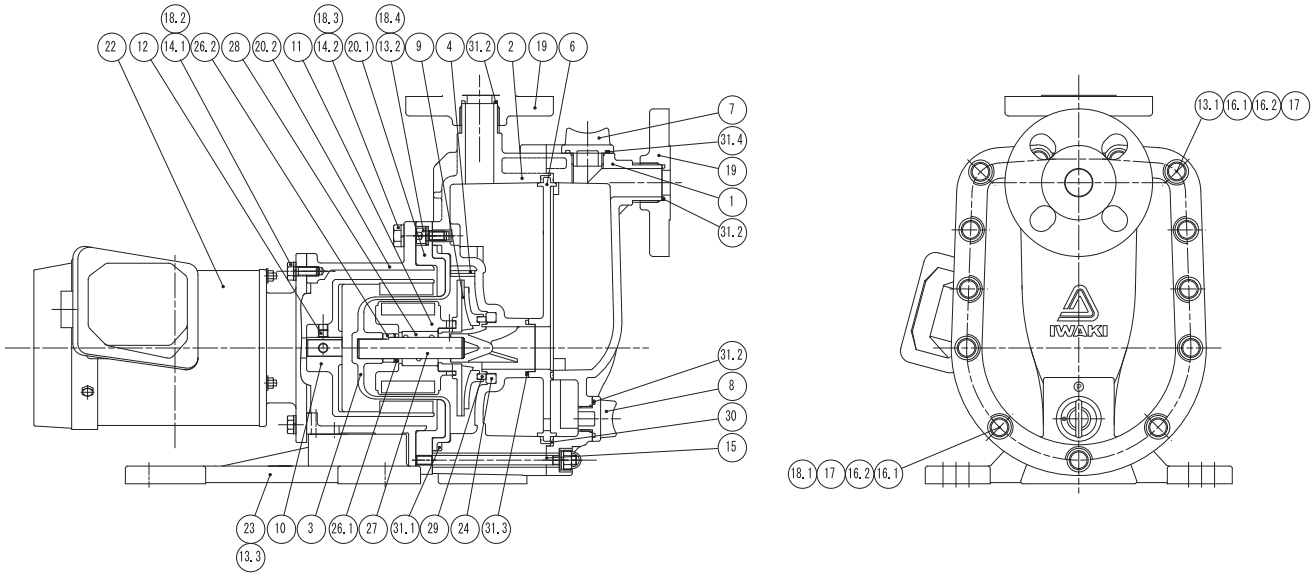

NO	PART NAMES	MATERIAL			Q'TY	REMARKS
		CA	RA	KA		
1	FRONT CASE	GFRPP			1	
2	REAR CASE	GFRPP			1	
3	REAR CASING	GFRPP			1	
4	VOLUTE SPACER	GFRPP			1	
6	PLATE	GFRPP			1	
7	CAP	GFRPP			1	
8	DRAIN CAP	GFRPP			1	
9	IMPELLER UNIT	GFRPP			1	
10	DRIVE MAGNET UNIT	SMX-220: FERRITE MAGNET + ALUMINIUM ALLOY SMX-221: FERRITE MAGNET + DUCTILE IRON SMX-222: RARE EARTH MAGNET + DUCTILE IRON			1	
11	MAGNET CAPSULE UNIT	SMX-220, 221: FERRITE MAGNET + PP SMX-222: RARE EARTH MAGNET + PP			1	
12	HEX SOCKET SET SCREW	STEEL			2	
13.1	HEX SOCH HEAD BOLT	STNLS STL			8	M8×40 PW,SW
13.2	HEX SOCH HEAD BOLT	STNLS STL			3	M8×15
13.3	HEX SOCH HEAD BOLT	STEEL			4	M8×20 PW,SW
14.1	HEX HEAD BOLT	STNLS STL			4	220 type: M8×20 221, 222 type: M10×25
14.2	HEX HEAD BOLT	STNLS STL			4	M10×25
15	STUD BOLT	STNLS STL			5	
16.1	NUT	STNLS STL			13	M8
16.2	COVER CAP	PE			13	
17	PLAIN WASHER	STNLS STL			13	M8
18.1	SPRING WASHER	STNLS STL			5	M8
18.2	SPRING WASHER	STNLS STL			4	220 type:M8 221, 222 type:M10
18.3	SPRING WASHER	STNLS STL			4	M10
18.4	SPRING WASHER	STNLS STL			3	M8
19	FLANGE	GFRPP			2	
20.1	REAR CASING SUPPORT	DUCTILE IRON			1	
20.2	ADAPTER	DUCTILE IRON			1	
22	MOTOR	———			1	
23	BASE	GFRPP			1	
24	LINER RING	ALUMINA CERAMIC			1	
26.1	REAR THRUST RING	———	HIGH PURITY ALUMINA CERAMIC	———	1	ONLY RA TYPE
26.2	REAR THRUST	CFRETFE			1	
27	SPINDLE	HIGH PURITY ALUMINA CERAMIC		SiC	1	
28	BEARING	Carbon	Filled PTFE	SiC	1	
29	MOUTH RING	Filled PTFE			1	
30	GASKET	V:FKM E:EPDM			1	
31.1	O RING (REAR CASING)				1	G-160
31.2	O RING (DRAIN CAP/FLANGE)				3	G-25
31.3	O RING (REAR CASE)				1	G-40
31.4	O RING (CAP)				1	G-30

The diagram is of the SMX-220.

Outline

SMX-44□

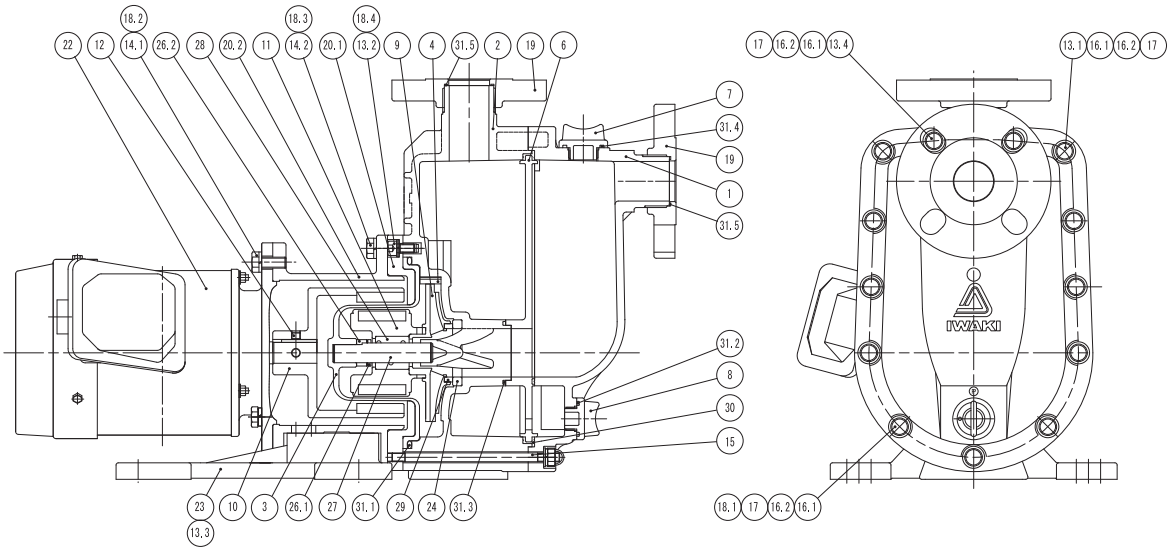

NO	PART NAMES	MATERIAL			Q'TY	REMARKS
		CA	RA	KA		
1	FRONT CASE	GFRPP			1	
2	REAR CASE	GFRPP			1	
3	REAR CASING	GFRPP			1	
4	VOLUTE SPACER	GFRPP			1	
6	PLATE	GFRPP			1	
7	CAP	GFRPP			1	
8	DRAIN CAP	GFRPP			1	
9	IMPELLER UNIT	GFRPP			1	
10	DRIVE MAGNET UNIT	SMX-441: FERRITE MAGNET + DUCTILE IRON SMX-442, 443: RARE EARTH MAGNET + DUCTILE IRON			1	
11	MAGNET CAPSULE UNIT	SMX-441: FERRITE MAGNET + PP SMX-442, 443: RARE EARTH MAGNET + PP			1	
12	HEX SOCKET SET SCREW	STEEL			2	
13.1	HEX SOCH HEAD BOLT	STNLS STL			6	M8×45
13.2	HEX SOCH HEAD BOLT	STNLS STL			3	M8×15
13.3	HEX SOCH HEAD BOLT	STEEL			4	M8×20 PW,SW
13.4	HEX SOCH HEAD BOLT	STNLS STL			2	M8×85
14.1	HEX HEAD BOLT	STNLS STL			4	M10×25
14.2	HEX HEAD BOLT	STNLS STL			4	M10×25
15	STUD BOLT	STNLS STL			5	
16.1	NUT	STNLS STL			13	M8
16.2	COVER CAP	PE			13	
17	PLAIN WASHER	STNLS STL			21	M8
18.1	SPRING WASHER	STNLS STL			13	M8
18.2	SPRING WASHER	STNLS STL			4	M10
18.3	SPRING WASHER	STNLS STL			4	M10
18.4	SPRING WASHER	STNLS STL			3	M8
19	FLANGE	GFRPP			2	
20.1	REAR CASING SUPPORT	DUCTILE IRON			1	
20.2	ADAPTER	DUCTILE IRON			1	
22	MOTOR	——			1	
23	BASE	GFRPP			1	
24	LINER RING	ALUMINA CERAMIC			1	
26.1	REAR THRUST RING	——	HIGH PURITY ALUMINA CERAMIC	——	1	ONLY RA TYPE
26.2	REAR THRUST	CFRETFE			1	
27	SPINDLE	HIGH PURITY ALUMINA CERAMIC		SiC	1	
28	BEARING	High density carbon	Filled PTFE	SiC	1	
29	MOUTH RING	Filled PTFE			1	
30	GASKET	V:FKM E:EPDM			1	
31.1	O RING (REAR CASING)				1	G-160
31.2	O RING (DRAIN CAP)				1	G-25
31.3	O RING (REAR CASE)				1	P-50
31.4	O RING (CAP)				1	G-30
31.5	O RING (FLANGE)				2	AS568-129

The diagram is of the SMX-441.

Outline

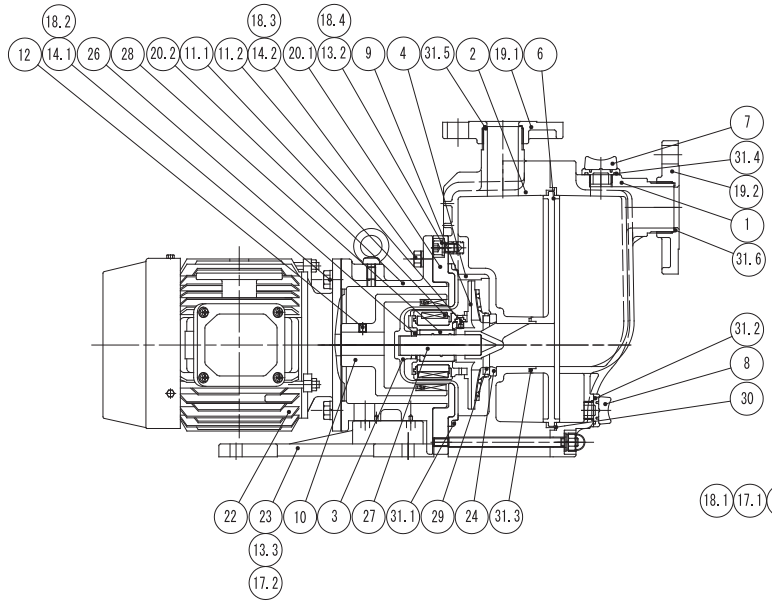

SMX-54□

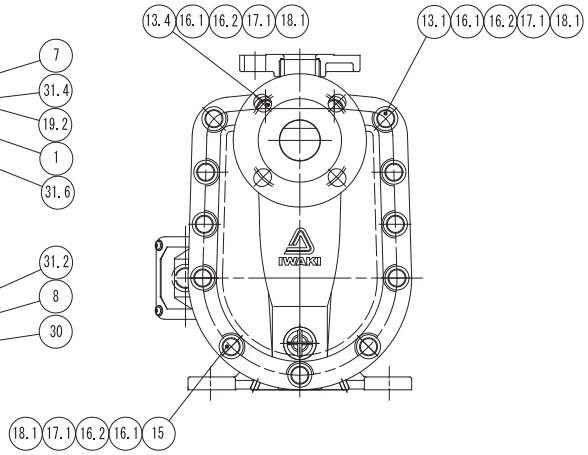

NO	PART NAMES	MATERIAL			Q'TY	REMARKS
		CA	RA	KA		
1	FRONT CASE	GFRPP			1	
2	REAR CASE	GFRPP			1	
3	REAR CASING	GFRPP			1	
4	VOLUTE SPACER	GFRPP			1	
6	PLATE	GFRPP			1	
7	CAP	GFRPP			1	
8	DRAIN CAP	GFRPP			1	
9	IMPELLER UNIT	GFRPP			1	
10	DRIVE MAGNET UNIT	RARE EARTH MAGNET + DUCTILE IRON			1	
11.1	MAGNET CAPSULE UNIT	RARE EARTH MAGNET + PP			1	
11.2	LOCK PIN	GFRPPS			2	
12	HEX SOCKET SET SCREW	STEEL			2	M8×10
13.1	HEX SOCH HEAD BOLT	STNLS STL			6	M10×50
13.2	HEX SOCH HEAD BOLT	STNLS STL			3	M10×16
13.3	HEX SOCH HEAD BOLT	STNLS STL			4	542, 543: M8×20 PW, SW 545: M10×16
13.4	HEX SOCH HEAD BOLT	STNLS STL			2	M10×90
14.1	HEX HEAD BOLT	STNLS STL			4	542, 543: M10×30 545: M12×40
14.2	HEX HEAD BOLT	STNLS STL			4	542, 543: M10×25 545: M10×30
15	STUD BOLT	STNLS STL			5	
16.1	NUT	STNLS STL			13	M10
16.2	COVER CAP	PE			13	
17.1	PLAIN WASHER	STNLS STL			21	M10
17.2	PLAIN WASHER	STNLS STL			4	M10 ONLY 545 TYPE
18.1	SPRING WASHER	STNLS STL			13	M10
18.2	SPRING WASHER	STNLS STL			4	542, 543: M10 545: M12
18.3	SPRING WASHER	STNLS STL			4	M10
18.4	SPRING WASHER	STNLS STL			3	M10
18.5	SPRING WASHER	STNLS STL			4	M10 ONLY 545 TYPE
19.1	FLANGE	GFRPP			1	40A
19.2	FLANGE	GFRPP			1	50A
20.1	REAR CASING SUPPORT	DUCTILE IRON			1	
20.2	ADAPTER	DUCTILE IRON			1	
22	MOTOR	———			1	
23	BASE	SMX-542, 543: GFRPP			1	
		SMX-545: SPCC			2	
24	LINER RING	HIGH PURITY ALUMINA CERAMIC			1	
26	REAR THRUST RING	HIGH PURITY ALUMINA CERAMIC		SiC	1	
27	SPINDLE	HIGH PURITY ALUMINA CERAMIC		SiC	1	
28	BEARING	Carbon	Filled PTFE	SiC	1	
29	MOUTH RING	Filled PTFE			1	
30	GASKET	V: FKM E:EPDM			1	
31.1	O RING (REAR CASING)				1	G-180
31.2	O RING (DRAIN CAP)				1	G-25
31.3	O RING (REAR CASE)				1	G-55
31.4	O RING (CAP)				1	G-30
31.5	O RING (FLANGE 40A)				1	AS568-129
31.6	O RING (FLANGE 50A)				1	AS568-136

The diagram is of the SMX-542.

Installation

1. Before installation 12

2. Installation location 13

3. Installation..... 13

4. Pipework 14

5. Wiring 17

Installation

⚠WARNING

- **Do not modify the pump**
  Alterations to the pump carries a high degree of risk. It is not the manufacturer's responsibility for any failure or injury resulting from alterations to the pump.

⚠CAUTION

- **Do not run pump dry**
  Do not run pump dry (operation without priming water or with a suction valve closed). Internal parts are excessively worn by friction heat and fatal pump damage results.
  * If the pump runs dry by mistake, turn off power and leave it for more than one hour to cool it down. Quick cooling can give rise to cracks on parts.
  * An Iwaki DRN pump protector is recommended for the prevention of dry running.

- **Do not operate the pump in a flammable atmosphere**
  Do not place explosive or flammable material near the pump.

1. Before installation

In a flooded suction system, follow the next steps when starting/stopping the pump for the prevention of water hammer. Take extra care when a discharge line is long.

When starting the pump

Check that the pump is primed. Run the pump with a discharge valve closed. Once a pressure gauge points the max discharge pressure, open the discharge valve gradually to obtain a specified discharge pressure (or discharge capacity).

When stopping the pump

Gradually close a discharge valve. Turn off power and stop the pump after the valve is fully closed.

*Never close a discharge line suddenly with a solenoid valve. Shutting the line rapidly causes water hammer and the pump may be damaged by excessive pressure.

2. Installation location

Select a location where meets the following conditions.

- Select a level location, free from vibration, that won't hold liquid.
- Ambient temperature does not exceed 0-40ºC.
- Ambient humidity does not exceed 35-85%RH.
- A dry atmosphere (except outdoor use)
- A clean atmosphere

3. Installation

1. Install the pump as close to the suction tank and its liquid level as possible. Allowable priming lift is up to 4m, however, try to keep the shortest priming lift.
   *A priming lift varies with liquid characteristics, temperature and suction line length. Contact us for detail information.
2. Secure maintenance space around the pump.
3. The figure below shows a foundation.
   • Take account of not only the footprint of the pump but also the dimensions (pump size).
   • If piping vibrates sympathetically with the pump in operation, provide an expansion joint between the pump and the piping to reduce vibration.

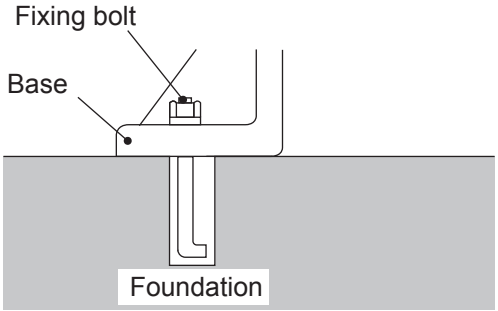

4. Outdoor use model can be used indoors. If the motor is designed for indoor use, do not use it out of doors. When installing the outdoor use model out of doors, take preventative measures to protect a motor and electrical circuit.

⚠CAUTION

- Use measures to keep the pump connections free from stress. Weight and thermal expansion/contraction of the piping can stress connection points.
- If the pump unit is not anchored to the foundation and if the motor unit is heavier than the pump unit, the entire pump leans towards to the motor. See page 48 as well.

4. Pipework

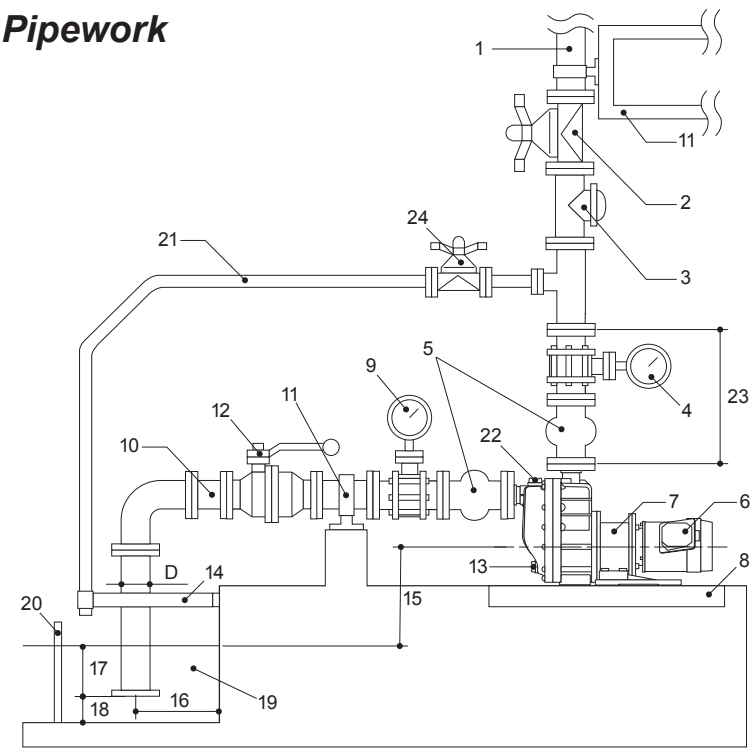

1. Discharge line
2. Shut off valve
3. Check valve
4. Pressure gauge
5. Flexible joint
6. Motor
7. Pump
8. Drain channel
9. Vacuum gauge
10. Suction pipe (Pipe diameter : D)
11. Pipe support
12. Suction valve
13. Drain cap
14. Pipe support
15. Suction lift (4m or less)
16. 1.5D or wider
17. 500 mm or higher
18. 1.5D or wider (500mm or wider if scale could build up in the supply tank)
19. Supply tank
20. Screen
21. Air vent line
22. Priming water cap
23. 500mm or longer straight pipe
24. Shutoff valve

■ Suction line

1. A suction pipe I.D. should be equal to the pump inlet I.D. (25A, 40A or 50A)

If a suction pipe I.D. is larger than a pump inlet I.D., air volume in a suction line becomes so large that the pump can not make self-priming.

2. Suction line length should be within 4.7m in total (Horizontal and vertical pipe line)

Suction line length is the entire length from the pump inlet to the lowest pipe end, including horizontal parts. If a suction line is longer than 4.7m, air volume becomes large in the line. This prevents the pump from sucking liquid even if a priming lift is 4m or less (the maximum priming lift is 4m). Also, If a supply tank is too small, a liquid level can fluctuate significantly. Obtain a rough guide of the highest possible self-priming height at each liquid specific gravity by the following formula.

The highest possible self-priming height [m] = Self-priming height with clean water [m] / Liquid specific gravity

3. End of a suction line

- The end of a suction line should be at least 500mm below a liquid level for the prevention of air ingress.
- The distance from the lowest pipe end to a tank bottom should be 1.5 times longer than a suction pipe I.D.
- Provide a screen in a supply tank for the prevention of foreign matter interfusion (Clean the screen periodically.).

4. A suction gate valve should be installed

In a flooded suction system, install a gate valve on a suction line for easier overhaul & inspection.

5. Make sure joints on suction line are secure and air doesn't come in. Try to reduce the number of joints. If air enters suction line, liquid may not be pumped or the pump may break at its worst.

6. Do not make an arched line in order to prevent air from being trapped.

A suction line right before the pump inlet should be laid on a rising gradient of 1/100 toward the pump.

7. Pipe support

If piping weight loads the pump, plastic parts are deformed. Be sure to install a pipe support.

■ Discharge line

1. A discharge pipe I.D. is related to pipe resistance

Pipe resistance rises too high to obtain an intended flow if a discharge pipe I.D. is too narrow. Degassing efficiency and priming lift will be affected as well. Install a 500mm straight pipe right after the pump outlet.

2. A discharge gate valve should be installed

Install a gate valve on a discharge line not only for adjusting a discharge flow but also smooth operation, inspection and maintenance. Make sure that a discharge or an air vent line is open during self-priming operation.

3. A check valve should be installed

When selecting a check valve, check its maximum operating pressure to make sure it tolerates a possible pressure rise due to water hammer or backflow.

- A discharge line is too long.
- Actual discharge head (static discharge head plus discharge pipe resistance) is more than 15m.
- The end of discharge line is 9m higher than a liquid level.
- Several pumps are running in parallel.

4. An air vent line should be arranged in the following cases

- An horizontal discharge line is 10m or more.
- A check valve is installed. Otherwise self-priming can not be performed.
- A discharge line is not at atmospheric pressure. Otherwise self-priming can not be performed.

5. A pressure gauge should be installed

Install a pressure gauge on a discharge line for monitoring operating conditions.

6. Install a drain valve if it is possible for liquid in a discharge line to freeze

7. Pipe support

If piping weight loads the pump, any plastic part is deformed. Be sure to install a pipe support.

Good conditions	Unacceptable conditions
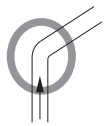 Ascension	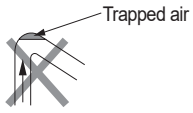 Declination
Inverted arch piping	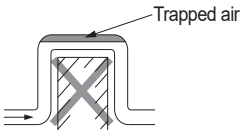 Arched piping

■ Tightening torque between the pump and pipework

Connect the pump to pipework via inlet and outlet flanges according to the table below. This table is based on use of metal pipe flanges with rubber gaskets. Tighten bolts diagonally at even tension.

Bolt size	Tightening torque (N•m)
M16	20

■ Piping load and momentum

Try not to apply a heavy load to the inlet and outlet flanges. Permissible piping weight and moment to the pump are as below.

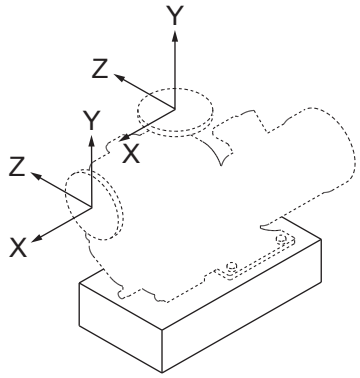

Permissible stress to outlet flange

	Pipe dia. (mm)	
	25	40
	Load	
Load direction	kN	
Fx	0.10	0.15
Fy: compression	0.15	0.20
Fy: tension	0.10	0.10
Fz	0.10	0.15

Permissible stress to inlet flange

	Pipe dia. (mm)	
	25	40,50
	Load	
Load direction	kN	
Fx	0.10	0.10
Fy	0.10	0.15
Fz	0.10	0.15

Permissible moment to outlet flange

	Pipe dia. (mm)	
	25	40
	Moment	
Load direction	kN·m	
Mx	0.02	0.05
My	0.05	0.10
Mz	0.05	0.10

Permissible moment to inlet flange

	Pipe dia. (mm)	
	25	40, 50
	Moment	
Load direction	kN·m	
Mx	0.05	0.10
My	0.02	0.05
Mz	0.05	0.10

5. Wiring

Electrical work should be performed by a qualified electrician (Contact us as necessary.). Otherwise, personal injury or property damage may result. It is not the manufacturer's responsibility for any failure or injury resulting from noncompliance with this notice.

1. Install an electromagnetic switch according to motor specifications (voltage, capacity, etc.).
2. If the pump is used out of doors, protect switches from rainwater.
3. Electromagnetic switches and push buttons should be installed away from the pump.

Operation

1. Operational precautions 19

2. Before operation 20

3. Preparation 21

4. Operation 22

Operation

1. Operational precautions

⚠CAUTION

- Never run the pump dry or run it with a suction side valve (Gate valve) closed. This may damage the pump.

Prohibition

- Stop the pump within one minute when it is running under cavitation or when air is entrained from a suction line.

- Stop the pump within one minute when the magnet coupling is decoupled. The magnetic force reduces if the pump keeps on running in this condition.

- Keep liquid temperature change within 80°C at any time during operation or stop.

- (In a flooded suction system,) Start the pump with a discharge valve fully closed in order to avoid water hammer.

- If the pump is operated with a discharge valve closed for a long time, the liquid temperature inside the pump rises and damages the pump.

Caution

- If power is interrupted while the pump is running, switch off the pump immediately and close a discharge valve.

- Take extra care for a discharge pressure not to exceed the pump limit. Refer to page 21 for the maximum operating pressure at each model.

Caution

- The surface temperature of the pump or pipe rises high along with liquid temperature in or right after operation. Take preventive measures. See the table below for the surface temperature when transferring a liquid of 80°C.

Liquid temperature	Surface temperature (at ambient 40°C)
80°C	80°C

- Noise level

Model	SMX-22	SMX-44	SMX-55
Noise level	80dB		

In case the pump noise affects human health or communication to secure a safety, provide a noise reduction cover. Be careful not to reduce cooling effect by a motor fan.

2. Before operation

Confirm pump performance and specifications prior to operation.

1. H-Q performance

The performance curves on catalogues are based on pumping clean water at 20ºC in a flooded suction system.

2. Prime the pump before self-priming operation

The SMX is a self-priming pump, however, the pump needs to be primed to a certain liquid level before operation. Once the pump is primed, generally the pump doesn't need to be primed at each operation because the pump keeps a needed liquid level for the next self-priming. But then the pump still needs to be primed after a long period of storage (one day or more) or when the self-priming operation was not completed (when the pump stops running before liquid was discharged.).

NOTE: Do not prime the pump rapidly. Liquid may flow out of the pump.

The minimum liquid volume

SMX-22□	3.0L
SMX-44□	4.2L
SMX-54□	5.4L

3. ON-OFF operation

Frequent ON-OFF operation damages the pump, especially in self-priming operation. Do not make ON-OFF operation more than six times per hour.

4. Handled liquid - Observe the next points

1. Slurry : Slurry can not be handled.
2. Liquid viscosity : Allowable up to 30mPa•s. Contact us for detail.
3. Liquid temperature : 0-80ºC (Clean water)
   Self-priming performance reduces as liquid temperature increases. Some liquid with a high vapour pressure or bubbly liquid may not be sucked up in the self-priming mode or not even be pumped.

5. If the magnet coupling (the drive and driven magnets) is decoupled:

Stop the pump immediately. Liquid can not be pumped at all in this state. Magnetic force reduces if the pump keeps on running in this condition.

6. Operating temperature

Allowable liquid temperature : 0-80 ºC with clean water. Non freezing
Self-priming performance reduces as liquid temperature increases.
Allowable liquid temperature varies with chemicals.

Ambient temperature range : 0-40 ºC

Ambient humidity range : 35-85%RH

7. Maximum operating pressure

See the table below for the maximum operating pressure at each model. Do not run the pump over the limit. Note liquid of high specific gravity can easily exceed the limit during operation.

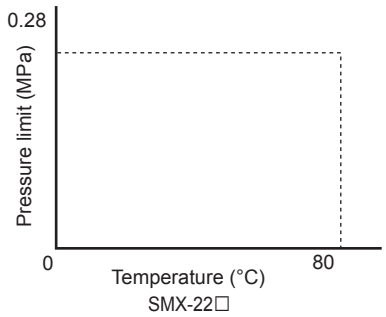

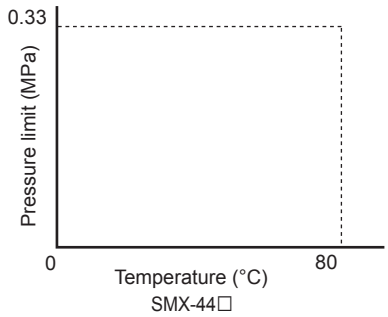

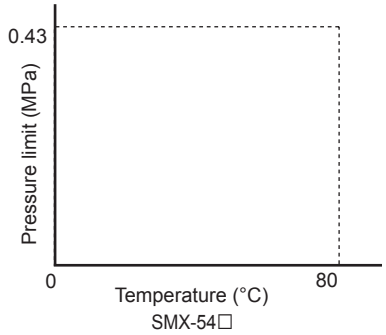

3. Preparation

■ Preparations for operation

Take the next steps to start the pump at the first operation or after a long period of storage.

1. Clean the inside of piping and tank.

Do not leave any waste of bond, sealing material, and screws/nuts.

2. Retighten the bolts on piping connections.

Make sure air does not enter the piping. Take extra care to a suction line because of negative pressure in it.

3. Check the bolts on the pump and retighten them as necessary.

4. Detach the cap for priming. Fill the pump with liquid.

⚠CAUTION
Do not prime the pump rapidly. Liquid may flow out of the pump.

5. Tighten the cap securely in order to prevent entrained air.

6. Check the direction of motor rotation

Run the motor for a moment in order to check if the motor rotates to the direction pointed by an arrow label (clockwise seen from the motor fan). If the motor rotates in reverse, interchange two of 3-phase power.

4. Operation

■ Starting process

Operate the pump by the following procedure.

	Operation procedure	Remarks
1	• Close or open valves.	• In a flooded suction system: Close suction & discharge valves fully. • In a suction lift system: Open suction & discharge valves fully.
2	• Prime the pump.	• In a flooded suction system: Open suction & discharge valves to fill the pump unit and then close a discharge valve. • In a suction lift system: Prime the pump unit via the priming port. Do not forget to close the priming port.
3	• Check the motor for correct rotating direction. Turn on power and then immediately switch off the power.	• Supply power to run the pump only for checking a rotational direction. (The correct direction is indicated with an arrow on the motor.) • Check if the motor fan smoothly stops after the power is turned off. ⚠**CAUTION** ● The pump can be damaged when running in reverse rotation for a long time. ● If the motor fan does not stop smoothly, internal parts may contact each other. Check the inside of the pump. ● If the pump runs in reverse rotation for a long time, the primed liquid may flow back. In this case prime the pump again.
4	• Turn on power and start the pump to adjust discharge pressure and capacity. Observer the minimum discharge capacity. See below.	• In a flooded suction system: Run the pump with a discharge valve closed. Once a pressure gauge points the max discharge pressure, open the discharge valve gradually to obtain a specified discharge pressure (or discharge capacity). NOTE: Start to open/close a discharge valve gradually to adjust discharge pressure within one minute after the pump starts to run. Always check a discharge pressure gauge (or adjust discharge capacity by checking a flow meter). • In a suction lift system: Start the pump with discharge valves full open. When air is expelled, start to close a discharge valve gradually to obtain a specified discharge pressure. Note that it takes a while to completely expel air out of the pump and a suction line. ⚠**CAUTION** Do not open the valve sharply. The motor may be overloaded. Always open a valve while checking ammeters.

	Operation procedure	Remarks
4	Do not operate the pump below the minimum discharge capacity. ►The minimum discharge capacity: 10L/min (SMX-22 and -44), 20L/min (SMX-54) • Observe the minimum discharge capacity for the prevention of continuous closed-discharge operation. This rule holds true to not only manual operation but also automatic operation. ⚠**CAUTION** Do not run the pump longer than one minute with a discharge valve fully closed.	
5	<Points to be checked> Check a flow meter and confirm that pump operation is as per specifications during operation.	• If a flow meter is not available, calculate a flow rate from discharge pressure, suction pressure and current value, taking account of pipe resistance.

⚠CAUTION

In case of trouble, turn off power immediately and solve problems. See the "***1. Troubleshooting***" section.

■ Stopping process

	Operation Procedure	Remarks
1	• Close a discharge valve gradually.	• Do not close a discharge valve sharply whether manually or automatically. Otherwise, the pump may be damaged by water hammer action which tends to occur with a long a discharge line. When using a solenoid valve, set it to close slowly.
2	• Turn off power and stop pump operation.	• Check that the motor stops slowly and smoothly. If it does not stop smoothly, inspect the inside of the pump. • The pump is designed to keep enough liquid for the next self-priming operation by siphon cut. So generally the pump needs to be primed only once at the initial operation stage, however, check a liquid level in the pump after a long period of stoppage. • If the pump stops before self-priming is completed (before liquid is discharged.), the pump needs to be primed again for next self-priming operation.
3	<Leaving the pump stop> • A liquid level in the pump may decrease if the pump is not operated for a long period (a day or more). In such a case, prime the pump before operation. • Liquid in the pump may freeze and consequently damage the pump in winter. Drain liquid before storage. When draining harmful liquid, be sure to flush the inside of the pump and piping afterwards. • Use a heater to prevent liquid from freezing when the pump is temporarily stopped in an extremely cold region. • In the event of a power failure, turn off power and close a discharge valve.	

Maintenance

1. Troubleshooting 25

2. Maintenance & Inspection..... 26

3. Spare & Wear parts 30

4. Disassembly & Assembly..... 33

5. Mass of pumps 48

Maintenance

1. Troubleshooting

If you can not find out the root cause of failure, contact us.

Trouble	Cause	Troubleshooting
Self-priming is not performed (No liquid discharge) or too slow. The pump does not perform subsequent self-priming operation (No liquid discharge).	● Priming liquid level is too low. ● The pump is running dry.	○ Stop the pump and fill the pump unit. Then restart the pump.
	● A discharge valve is closed. ● An air vent line is closed.	○ Open the valves fully and start the pump.
	● Air enters the pump from suction line connections. ● Supply tank liquid level is too low.	○ Check connections on a suction line. ○ Fill the supply tank.
	● Discharge line is not at atmospheric pressure.	○ Install an air vent line. ○ Reconsider discharge line layout.
	● The magnet coupling is disconnected.* (The impeller unit does not rotate.)	○ Check amperage to see if the pump is not overloaded. ○ Check any foreign matters are not stuck between the impeller and the magnet capsule units. ○ Check for a viscosity or load change. ○ Check voltage and resume operation. NOTE: Contact us if disconnection often occurs.
	● Stroke speed is insufficient. ● The pump rotates in reverse.	○ Check wiring & the motor. ○ Correct motor wiring.
	● The pump is positioned too high.	○ Install the pump within the max priming lift. ○ Check that a liquid level is not too low.
	● Specific gravity or viscosity is not suitable. ● Liquid temperature is too high.	○ Check liquid temperature, SG and viscosity. ○ Reduce liquid temperature or shorten priming lift.
	● A suction line is too long.	○ Shorten the line.
	● Frequency mismatch	○ Match frequency to the pump.
	● A suction line is blocked with foreign matters. ● A discharge line is blocked with foreign matters.	○ Remove foreign matters. ○ Take measures against foreign matter interfusion.
	● A suction line is crushed or deformed.	○ Correct deformation or use a rigid pipe.
	● A discharge line end and an air vent line end are submerged.	○ Take the line ends up from a liquid level.
	● A suction flange or the cap is loose.	○ Check O ring and tighten flange/cap.
Discharge rate is too low.	● A suction line or the pump inlet are blocked with foreign matters.	○ Remove foreign matters from the pump inlet. ○ Take measures against foreign matter interfusion.
	● An air pocket is in a suction line.	○ Check and adjust the line as necessary.
	● The impeller inlet is blocked with foreign matters.	○ Remove foreign matters.
	● Air enters the pump from a suction line.	○ Check the line and retighten connections as necessary.
	● A discharge line or the pump outlet is blocked with foreign matters.	○ Remove foreign matters/scale. ○ Take measures against foreign matter interfusion.
	● Pipe resistance is increased due to an air pocket in pipework.	○ Reconsider pipework layout to remove arched line.
	● Actual head & head loss are too high.	○ Check actual head and head loss, and take necessary measures.
	● The motor rotates in reverse direction.	○ Exchange connected wires.

*A state that the combination of the impeller & magnet capsule units does not rotate in sync with the drive magnet.

Trouble	Cause	Troubleshooting
The motor is overheated.	● Voltage has dropped greatly. ● Overload ● Ambient temperature is too high.	○ Check voltage and frequency. ○ Check that specific gravity and viscosity are suitable. ○ Keep ventilation around the motor.
The discharge rate has dropped suddenly.	● The pump inlet is blocked with foreign matters.	○ Remove the foreign matters.
The pump vibrates excessively, accompanied by noise.	● The base is not anchored firmly. ● Installation bolts are loosened. ● A suction line is blocked and this is causing cavitation. ● The pump bearing and hubs are worn or melted. ● The magnet capsule or the spindle is damaged. ● Dynamic balance of the driving magnet has changed. ● Rotating parts come in contact with stationary parts. ● Wear or less lubricant on the motor bearing.	○ Fix the base. ○ Retighten the bolts. ○ Get rid of blockage. ○ Replace as necessary. ○ Replace as necessary. ○ Remove the cause or replace the part. ○ Replace as necessary. ○ Replace the motor bearing or motor.

2. Maintenance & Inspection

⚠ WARNING

● **Access limitation**

The magnet drive pump has a pair of strong magnets (the magnet capsule unit and drive magnet). The strong magnet field could adversely affect the persons who are assisted by electronic devices such as the pacemaker.

Prohibited

● **Turn off power before service**

Risk of electrical shock. Be sure to turn off power to stop the pump and related devices before service is performed.

Turning off power

● **Wear protective clothing**

Always wear protective clothing such as an eye protection, chemical resistant gloves, a mask and a face shield during disassembly, assembly or maintenance work. The specific solution will dictate the degree of protection. Refer to SDS precautions from the solution supplier.

Wear protection

⚠ WARNING

● **Do not catch the finger**

The magnetic force of the pump is powerful. Take care not to catch the finger in the adapter.

Caution

Maintenance

- ► Mark each wire so that the wires can be connected correctly to the motor.
- ► Do not disassemble the pump beyond the extent shown on this manual.
- ► Make sure to close the suction and discharge lines before the pump is demounted(/mounted) from piping. Remove a residual liquid from the pump/piping and clean the inside.
- ► Magnetic force of the pump is strong. Be careful not to catch the finger in parts. Do not allow iron pieces or powders to stick to a drive and a driven magnet.
- ► A pair of strong magnets is mounted in the pump and its magnetic force may affect magnetic disks/cards or wrist watches. Do not bring them close to the pump.
- ► The pump and piping temperature may be too high right after operation with a hot liquid. Wait until the pump cools down before it is taken apart for maintenance.

■ Daily inspection

1. Always check for leakage before pump operation. Do not run the pump when liquid leaks.

⚠CAUTION
The pump unit mounting bolts/nuts may loosen in the initial operation phase or under an operating condition where the temperature fluctuates greatly. Check the bolts/nuts periodically and tighten them as necessary. Tightening torque for the pump unit mounting bolts/nuts are shown on page 37. Tighten the bolts evenly.

2. Check whether the pump operates smoothly without abnormal noise or vibration.
3. Check a liquid level in a supply tank and a suction pressure.
4. Check that discharge capacity and a motor current value are as per specifications on the nameplate during operation.

NOTE A discharge pressure is in proportion to the specific gravity of liquid. The cock of a pressure gauge or a vacuum gauge should be opened only when measurement is carried out. Close it right after measurement. If the cock remains open during pump operation, its meter mechanism may be adversely affected by the abnormal pressure rise caused by water hammer action.

5. If a spare pump is stored, run it from time to time to keep it ready for operation at any time when needed.
6. Check discharge pressure, discharge capacity, and motor power supply voltage to see if they do not fluctuate during pump operation. See the "***1. Troubleshooting***" section as necessary.

Maintenance

■ Periodic inspection

To ensure efficient and smooth operation, perform periodic inspection. Be careful not to damage internal sliding parts and plastic parts when disassembling the pump.
The magnetic force of a drive and a driven magnet is strong. Be careful not to catch the finger. Do not put electrical devices such as a watch and a mag card close to those magnets.

Interval	Part names	Inspection items	Measures
Every six months (Maintain an inspection record)	Drive magnet unit	● Wear trace ● If the drive magnet is correctly mounted by hex. socket set screws and they are not loose. ● Decentering of magnet and motor shaft (Max.1/10mm)	○ Finding wear trace, contact us. ○ Reset the drive magnet to the motor shaft and retighten the screws. ○ Retighten the hex. socket set screws or replace the drive magnet (Contact us).
	Rear casing	● Wear tracks on an inner surface ● Cracks ● Wear of the rear thrust ● Contamination in rear casing	○ Contact us. ○ Replace as necessary. ○ Contact us. ○ Remove contamination.
	Magnet capsule unit	● Wear tracks on the rear end or the side face of the magnet capsule ● Cracks on the rear end or the side face of the magnet capsule ● Wear of the bearing ● Loose fit of the impeller unit	○ Contact us. ○ Contact us. ○ Replace as necessary. ○ Replace or contact us.
	Impeller unit	● Wear of the mouth ring ● Cracks ● Contamination in the impeller ● Impeller deformation	○ Replace as necessary. ○ Replace as necessary. ○ Remove contamination. ○ Replace as necessary.
	Front case Rear case	● Contamination ● Cracks ● Wear, cracks and wear tracks on a liner ring ● Swelling or a crack on O ring ● Wear tracks on an unlikely portion	○ Remove contamination. ○ Replace as necessary. ○ Contact us. ○ Replace as necessary. ○ Contact us.
	Spindle	● Cracks ● Wear	○ Replace as necessary. ○ Replace as necessary.

■ Wear limits of bearing and spindle

Model / Part names	SMX-22/-44			SMX-54		
	Default	Wear limit	Wear depth	Default	Wear limit	Wear depth
Bearing inner diameter	Ø 18.0mm	Ø 19.0mm	1.0mm	Ø 24.0mm	Ø 25.0mm	1.0mm
Spindle outer diameter	Ø 18.0mm	Ø 17.0mm	1.0mm	Ø 24.0mm	Ø 23.0mm	1.0mm

1. Above values show wear limit of the bearing and spindle.

2. If the clearance between the bearing and the spindle exceeds 1 mm, either of them, whichever has greater wear, should be replaced regardless of the wear limit.
   <Example>
   Inner diameter of bearing is Ø18.7 — Wear depth is 0.7mm (Within wear limit)
   Outer diameter of spindle is Ø17.5 — Wear depth is 0.5mm (Within wear limit)
   Clearance is 1.2mm. In this case replace the bearing, 'cause its wear is deeper than the spindle.

3. Sliding parts may suffer initial wear in an initial operation phase but this is not abnormal. Initial wear stops within approximately 100 hours.

■ Wear limit of mouth ring

Check wear degree of the mouth ring.

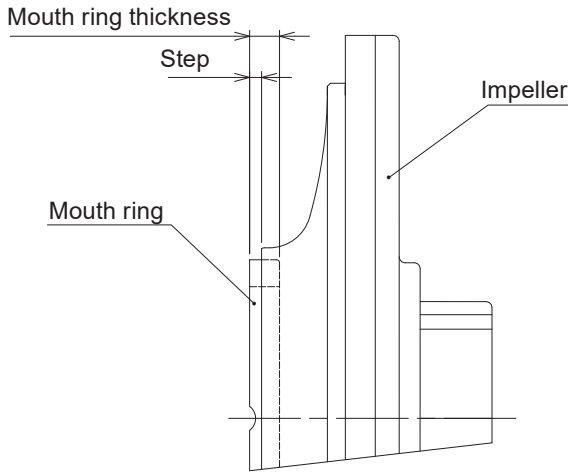

Thickness at shipment	Wear limit
7.5 mm	5.5 mm

NOTE: The mouth ring is 2 mm forward from the impeller end when shipped. Before the step has reduced to 0 mm, replace the impeller unit.

3. Spare & Wear parts

Appropriate spare parts are necessary for a long period of continuous operation. We recommend that wear parts be always in stock. Place an order for spares with the following information.

1. Part names and part number (See page 8, 9 & 10 for the part names section.)
2. Pump model identification code and manufacturing number (See pump nameplate.)
3. Drawing number if you have our approval drawing

■ Spare parts list <SMX-22>

No	Part names			Materials	Part codes		
					SMX-220	SMX-221	SMX-222
1	Front case			GFRPP	SMX0001		
2	Rear case	Impeller code	V	GFRPP	SMX0002		——
			Y	GFRPP	SMX0003		——
			T	GFRPP	——	SMX0033	
			X	GFRPP	——	SMX0002	
3	Rear casing			GFRPP	SMX0004		
4	Volute spacer	Impeller code	V	GFRPP	SMX0005		——
			Y	GFRPP	SMX0006		——
			X	GFRPP	——	SMX0005	
6	Plate			GFRPP	SMX0007		
7	Cap			GFRPP	SMX0008		
8	Drain cap			GFRPP	SMX0009		
9+29	Impeller unit	Impeller code	V	GFRPP	SMX0010		——
			Y	GFRPP	SMX0011		——
			T	GFRPP	——	SMX0034	
			X	GFRPP	——	SMX0010	
11	Magnet capsule unit		CA	——	SMX0012	SMX0035	SMX0038
			RA	——	SMX0013	SMX0036	SMX0039
			KA	——	SMX0014	SMX0037	SMX0040
19	Flange			GFRPP	SMX0015		
26.1	Rear thrust ring (for RA)			Alumina ceramic	SMX0016		
26.2	Rear thrust	For CA•KA		CFRETFE	SMX0017		
		For RA		CFRETFE	SMX0018		
27	Spindle	For CA•RA		Alumina ceramic	SMX0019		
		For KA		SiC	SMX0020		
30	Gasket		V	FKM	SMX0021		
			E	EPDM	SMX0022		
31.1	O ring (for Rear casing)		V	FKM	SMX0023		
			E	EPDM	SMX0024		
31.2	O ring (for Drain cap/ Flange)		V	FKM	SMX0025		
			E	EPDM	SMX0026		
31.3	O ring (for Rear case)		V	FKM	SMX0027		
			E	EPDM	SMX0028		
31.4	O ring (for Cap)		V	FKM	SMX0029		
			E	EPDM	SMX0030		

<SMX-44>

No	Part names			Materials	Part codes		
					SMX-441	SMX-442	SMX-443
1	Front case			GFRPP	SMX0041		
2	Rear case	Impeller code	T	GFRPP	SMX0043		——
			Y	GFRPP	SMX0042		——
			X	GFRPP	——	SMX0043	
3	Rear casing			GFRPP	SMX0004		
4	Volute spacer	Impeller code	T	GFRPP	SMX0045		——
			Y	GFRPP	SMX0044		——
			X	GFRPP	——	SMX0055	
6	Plate			GFRPP	SMX0046		
7	Cap			GFRPP	SMX0008		
8	Drain cap			GFRPP	SMX0009		
9+29	Impeller unit	Impeller code	T	GFRPP	SMX0048		——
			Y	GFRPP	SMX0047		——
			X	GFRPP	——	SMX0056	
11	Magnet capsule unit		CA	——	SMX0035	SMX0038	
			RA	——	SMX0036	SMX0039	
			KA	——	SMX0037	SMX0040	
19	Flange			GFRPP	SMX0049		
26.1	Rear thrust ring (for RA)			Alumina ceramic	SMX0016		
26.2	Rear thrust	for CA•KA		CFRETFE	SMX0017		
		for RA		CFRETFE	SMX0018		
27	Spindle	for CA•RA		Alumina ceramic	SMX0019		
		for KA		SiC	SMX0020		
30	Gasket		V	FKM	SMX0051		
			E	EPDM	SMX0052		
31.1	O ring (for Rear casing)		V	FKM	SMX0023		
			E	EPDM	SMX0024		
31.2	O ring (for Drain cap)		V	FKM	SMX0025		
			E	EPDM	SMX0026		
31.3	O ring (for Rear case)		V	FKM	SMX0053		
			E	EPDM	SMX0054		
31.4	O ring (for Cap)		V	FKM	SMX0029		
			E	EPDM	SMX0030		
31.5	O ring (for Flange)		V	FKM	SMX0031		
			E	EPDM	SMX0032		

<SMX-54>

No	Part names			Materials	Part codes		
					SMX-542	SMX-543	SMX-545
1	Front case		V	GFRPP	SMX0093		
			E	GFRPP	SMX0149		
2	Rear case			GFRPP	SMX0094		
3	Rear casing			GFRPP	SMX0095		
4	Volute spacer	Impeller code	Z	GFRPP	——	SMX0129	
			V	GFRPP	SMX0096		
			Y	GFRPP	——	——	SMX0096
			T	GFRPP	——	——	——
			X	GFRPP	——	——	——
6	Plate			GFRPP	SMX0097		
7	Cap			GFRPP	SMX0008		
8	Drain cap			GFRPP	SMX0009		
9+29	Impeller unit	Impeller code	Z	GFRPP	——	SMX0098	
			V	GFRPP	SMX0099		
			Y	GFRPP	——		SMX0099
			T	GFRPP	——	SMX0100	
			X	GFRPP	——		SMX0100
11.1	Magnet capsule unit		CA	——	SMX0101	SMX0130	
			RA	——	SMX0102	SMX0131	
			KA	——	SMX0103	SMX0132	
11.2	Lock pin			GFRPPS	SMX0104		
19.1	Flange 40A			GFRPP	SMX0105		
19.2	Flange 50A			GFRPP	SMX0106		
26	Rear thrust	for CA•RA		Alumina ceramic	SMX0107		
		for KA		SiC	SMX0108		
27	Spindle	for CA•RA		Alumina ceramic	SMX0109		
		for KA		SiC	SMX0110		
30	Gasket		V	FKM	SMX0111		
			E	EPDM	SMX0112		
31.1	O ring (for Rear casing)		V	FKM	SMX0113		
			E	EPDM	SMX0114		
31.2	O ring (for Drain cap)		V	FKM	SMX0025		
			E	EPDM	SMX0026		
31.3	O ring (for Rear case)		V	FKM	SMX0115		
			E	EPDM	SMX0116		
31.4	O ring (for Cap)		V	FKM	SMX0029		
			E	EPDM	SMX0030		
31.5	O ring (for Flange 40A)		V	FKM	SMX0031		
			E	EPDM	SMX0032		
31.6	O ring (for Flange 50A)		V	FKM	SMX0117		
			E	EPDM	SMX0118		

4. Disassembly & Assembly

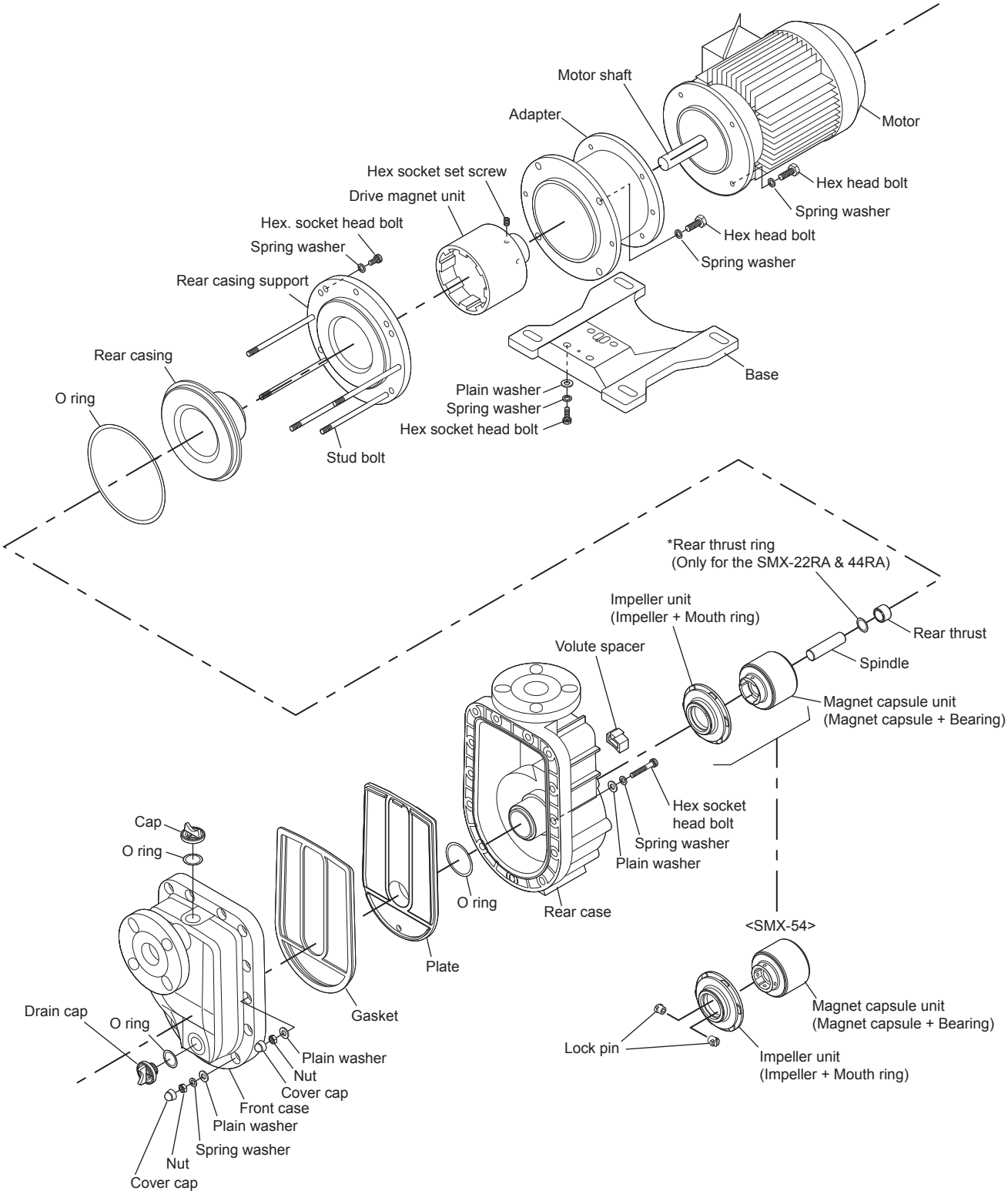

■ Tool list

Name	SMX-22/-44	SMX-54	Remarks
1. Spanner	13mm,17mm	17mm, 19mm	One each
2. Hex wrench	6mm	4mm, 8mm	One each
3. T Shaped wrench	13mm	17mm	
4. Flathead screw driver	×1		
5. Longnose pliers	×1		
6. Plastic hammer	×1		

■ Disassembly

1. Remove the drain cap and drain liquid from the pump unit (Liquid can not be drained completely.).

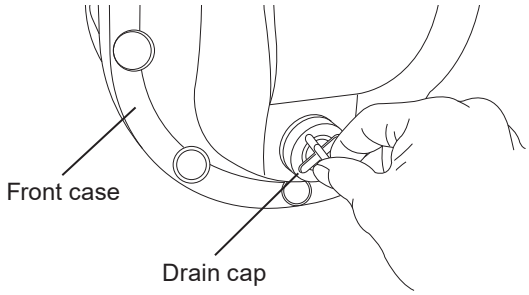

⚠ CAUTION

- Always wear protective clothing such as an eye protection, chemical resistant gloves, a mask and a face shield during disassembly, assembly or maintenance work.
- Solution in the discharge line may be under pressure. Release the pressure from the discharge line before disconnecting plumbing or disassembly of the pump to avoid solution spray.

2. Unscrew the adapter/pump unit fixing bolts and pull out the pump unit straight from the motor (then drain all the residual liquid). The motor is attracted by the magnetic force. Check the motor is anchored on a foundation before removing the pump unit.

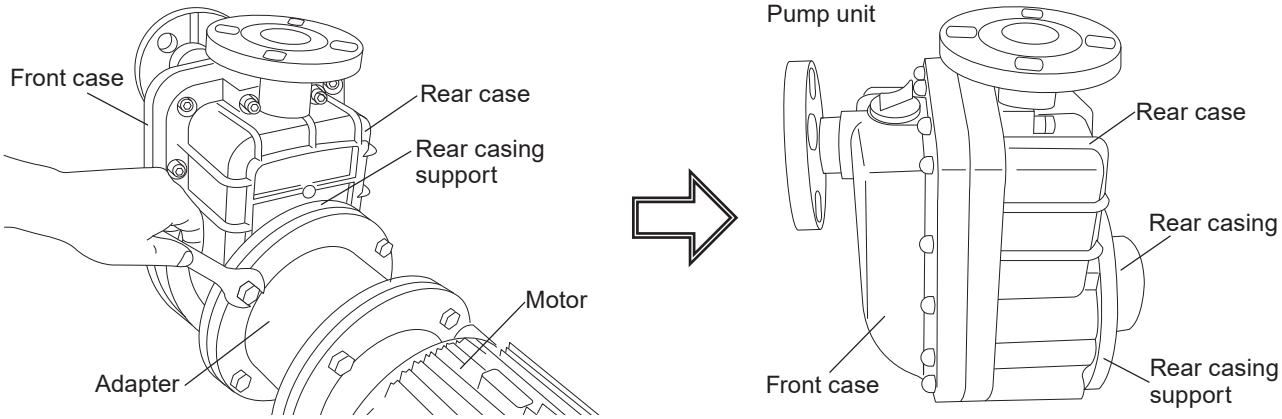

NOTE: Do not tilt the unit to the axis, or the unit may be stuck in the adapter. Push it back into the adapter and try again once it has been stuck.

⚠ CAUTION

There is strong magnetic force between the pump unit and the motor. Be careful not to catch the finger between them.

NOTE: Screw two M10×50 bolts into the right and left adapter thread holes in turn to push the pump head out.
For putting the pump unit and the motor together, screw two M10×50 bolts into the right and left adapter thread holes until the bolts come out about 45mm forward. Mate the bolt ends with the holes on rear casing support. Then start screwing down the bolts evenly in order to move the pump unit closer to the motor and finally put these components together.
Be careful not to catch the finger in the unit. There is strong magnetic force between them.
For the SMX-F54, use the attached back pullout bolts. For other models, purchase two M10×50 bolts separately.

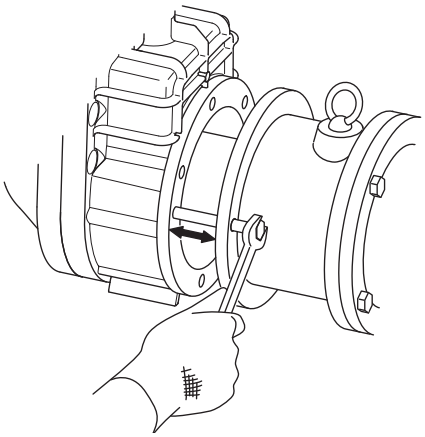

3. Remove three hex. socket head bolts which are fixing the rear casing support to rear case.

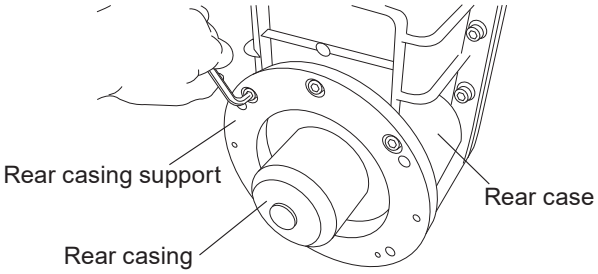

4. Remove all cover caps by using nippers.

NOTE: Pinch the cylindrical body of the cap and pull it straight.

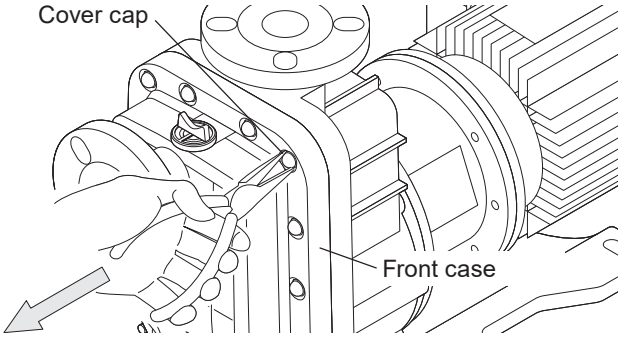

5. Loosen the five nuts on the front case (pointed by arrows).

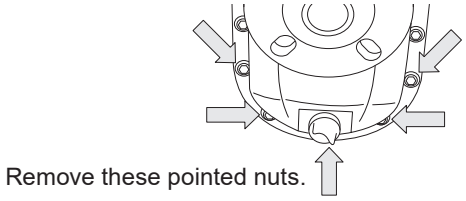

⚠ CAUTION
Be careful. Residual liquid can start to leak at this point.

6. Remove the rear casing support, rear casing and the impeller & magnet capsule units from the pump unit (SMX-22 & -44 RA types have a rear thrust ring. Do not loose it.).

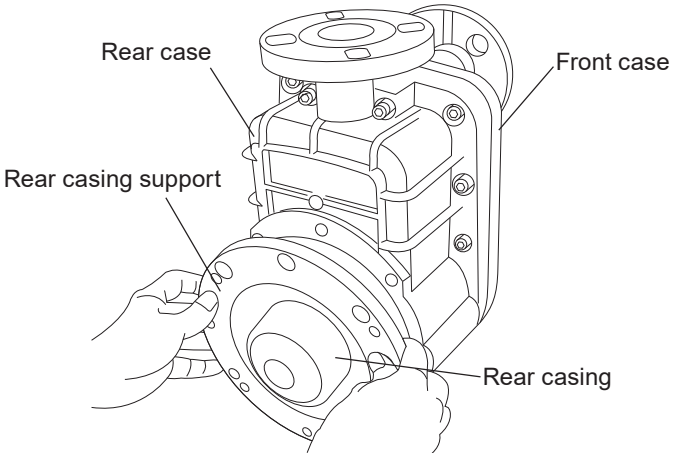

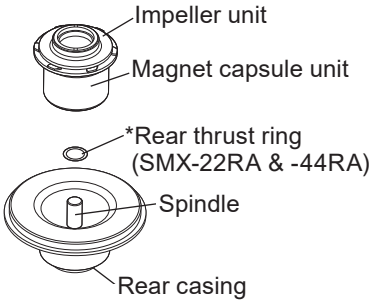

7. Loosen the front case/rear case fixing bolts to separate them.

8. Remove a plate, a gasket, O rings, and a volute spacer if it is installed.

■ Assembly

❗ INSPECTION
Make sure the magnet capsule is clean and no metal debris is there in advance.

⚠ CAUTION
Make sure the O ring and the gasket are clean and no debris or damage is there in advance. Use new parts as necessary.

1. Fit an O ring and a drain cap to a drain port on the front case.

2. Fit a gasket to a plate (Make sure the gasket is fitted in a groove on the plate.).

3. Mount the O ring and plate (and the volute spacer if it is provided) to the rear case (Volute spacer has a mounting direction!).

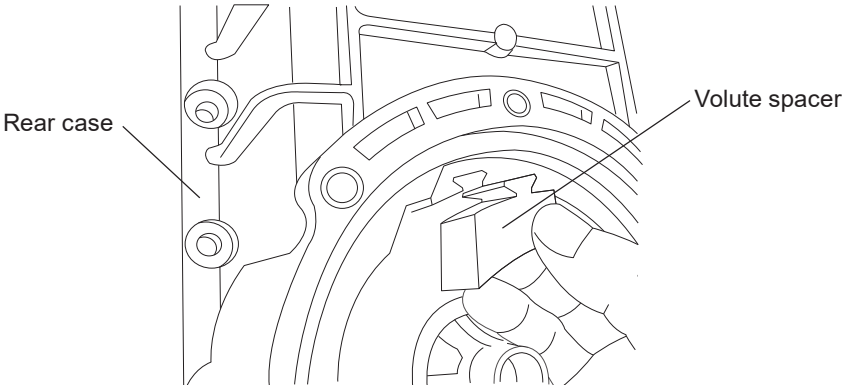

4. Lay the rear case on its rear side and mount the front case. Temporarily tighten the font case/rear case fixing bolts for preventing the O ring and plate from moving.
5. Insert the spindle into the rear casing through rear thrust.
6. Combine the impeller & magnet capsule units and fit them onto the spindle (For the SMX-22RA & -44RA, insert the rear thrust ring onto the spindle before the impeller & magnet capsule units.). And then fit them into the rear casing.

NOTE: See page 39-43 for the combination of the impeller & magnet capsule units.

7. Place the rear casing support in place while holding the rear casing in the rear case. Temporarily tighten the rear casing support fixing bolts and the pump unit fixing nuts.

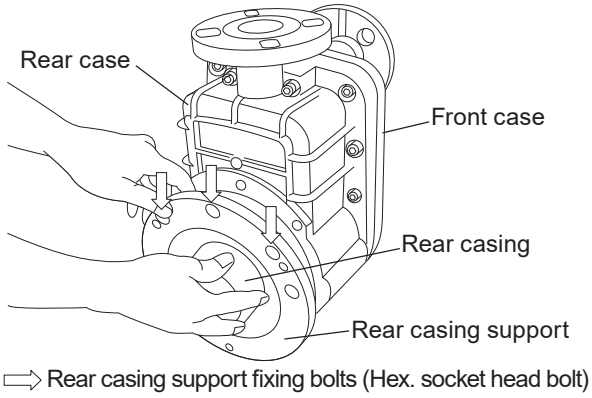

8. Tighten all bolts by the tightening torque below.

<Tightening torque>

Bolt size	Tightening torque
M8	11.8 N•m
M10	14.7 N•m

⚠CAUTION

Stainless bolts/nuts are easy to be stuck.

9. Use spacers to secure a space between the rear casing support and adapter so as not to catch the finger.
   Carefully move the pump unit towards the adapter, holding the pump unit securely.
   Do not hit the rear case or allow the motor to move towards the pump unit.

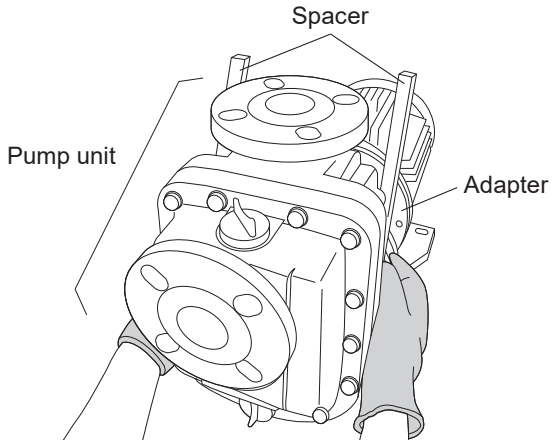

⚠CAUTION
Be careful not to catch the finger. The pump unit is always pulled strongly to the motor by magnet force. Fix the motor in advance so it won't move toward the pump unit.

NOTE: Screw two M10×50 bolts into the right and left adapter holes until they come out about 45mm forward, mating the bolt ends with the holes on rear casing support. Then start screwing down the bolts evenly in order to move the pump unit closer to the motor and finally put these components together. Reverse this procedure when removing the pump unit.
Be careful not to catch the finger in the unit. There is strong magnetic force between them.
For the SMX-F54, use the attached back pullout bolts. For other models, purchase two M10×50 bolts separately.

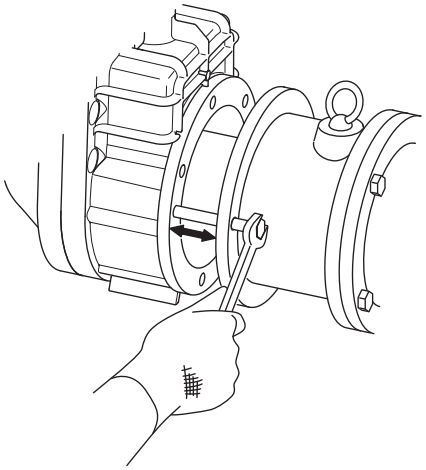

10. Tighten the adapter/pump unit fixing nuts.

■ Impeller & magnet capsule units

<SMX-22 & -44>

Impeller unit removal

Tap the back side of the impeller unit by a plastic hammer while holding the magnet capsule unit.

NOTE: If the impeller unit can not be removed from the magnet capsule unit in the above method, immerse the impeller unit in hot water of 80°C for five minutes. And then tap the back side of the impeller unit by a plastic hammer.

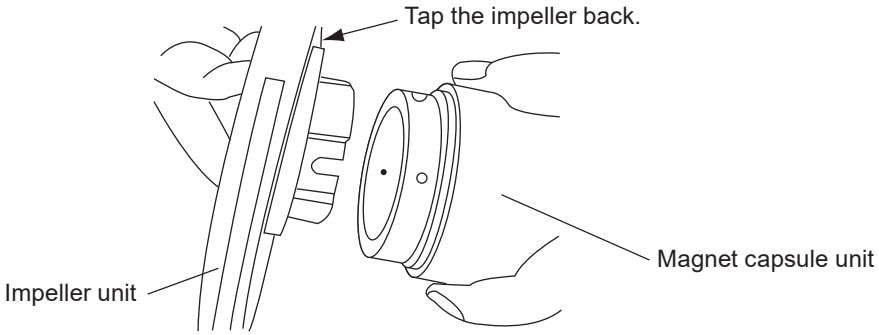

⚠CAUTION
Be careful not to get scaled with hot water.

Impeller unit mounting

Press the impeller unit into the magnet capsule unit according to mating parts. Make sure that the through-hole on the magnet capsule unit comes under the U-shape hole on the impeller unit and there is no clearance between the end of press-fitting part and a bearing surface.

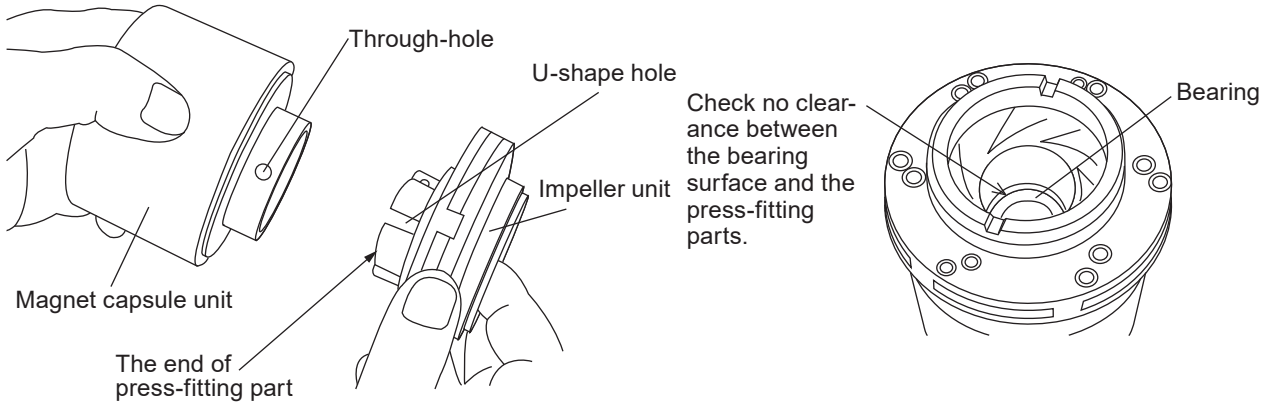

NOTE: If the fitting is too tight to pressfit the impeller unit, immerse the magnet capsule unit into hot water of 80°C for five minutes.

⚠CAUTION
Be careful not to get scaled with hot water.

<SMX-54>

The impeller unit is fixed to the magnet capsule unit by two lock pins. These two pins need to be removed before detaching the impeller unit.

The mating surface on the magnet capsule unit has two large holes (Stepped holes: ø6mm & ø12mm at inner dia) for the lock pins and two small holes (ø3mm) for cooling.

Also, the mating surface on the impeller unit has two U-shape holes for cooling and two stepped holes for the lock pins. Press the impeller unit into the magnet capsule unit with U-shape holes on the small holes (ø3mm.).

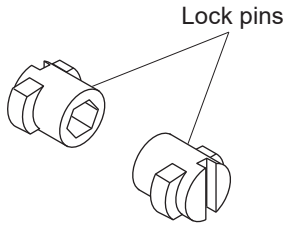

Lock pins are inserted from the inside of the magnet capsule assembly to catch the impeller unit.

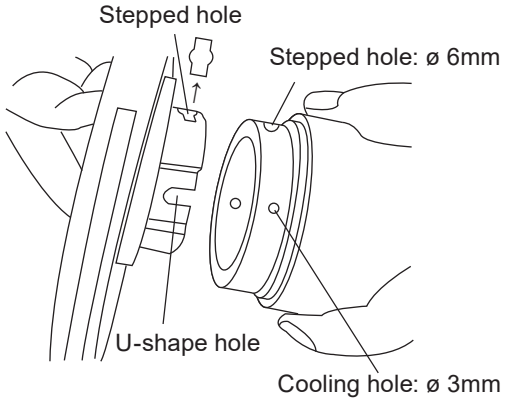

Impeller unit removal

a. Turn the lock pins 90 degrees anticlockwise, using a flathead screw driver and then push it inward to take it out. If it is hard to push the lock pins inward, slightly tap the end of driver handle.

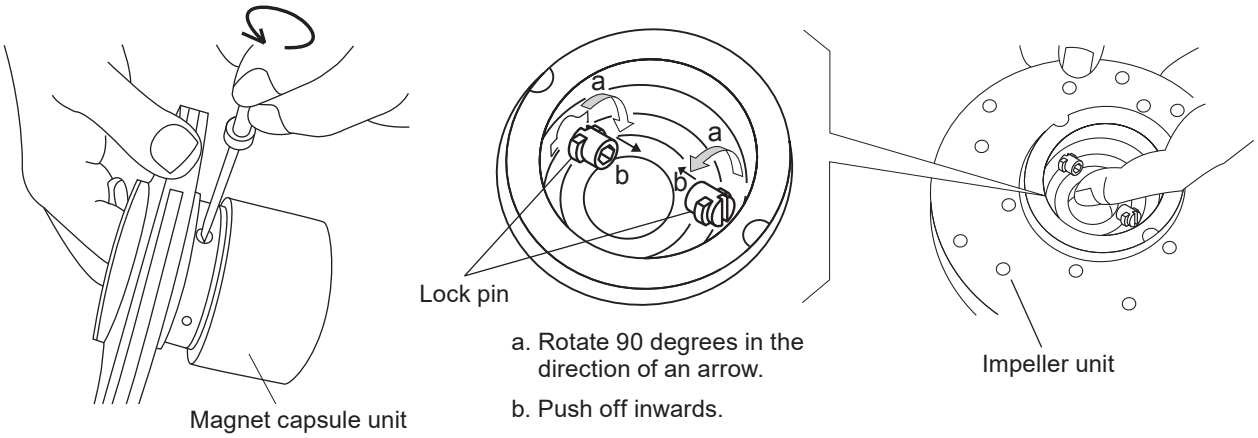

a. Rotate 90 degrees in the direction of an arrow.

b. Push off inwards.

b. The lock pins can also be released by using the 4mm hex. wrench from the inside of the impeller unit. In this case be sure to turn the wrench clockwise. After unscrewing the pins, push it out from the outside using a bar.

NOTE: The lock pins will be damaged if it is turned in reverse direction.

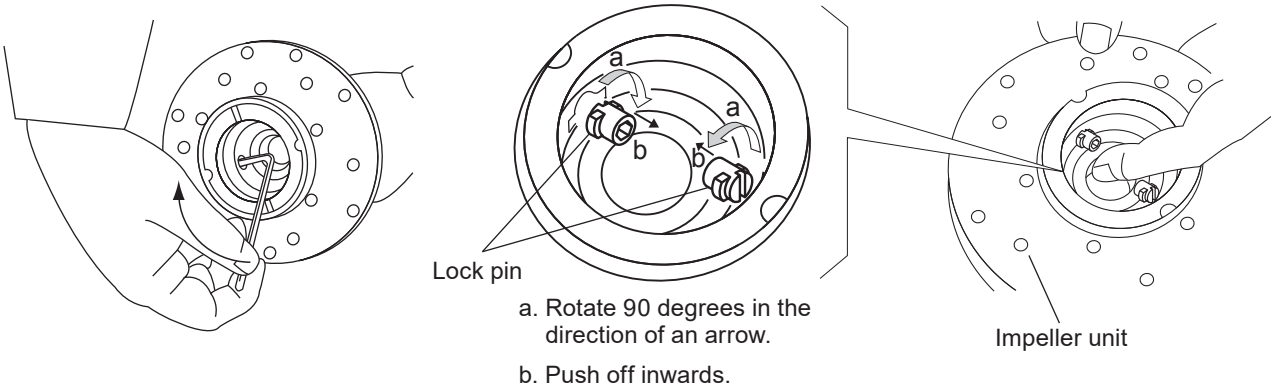

c. After the lock pins are removed, tap the back side of the impeller unit by a plastic hammer while holding the magnet capsule unit.

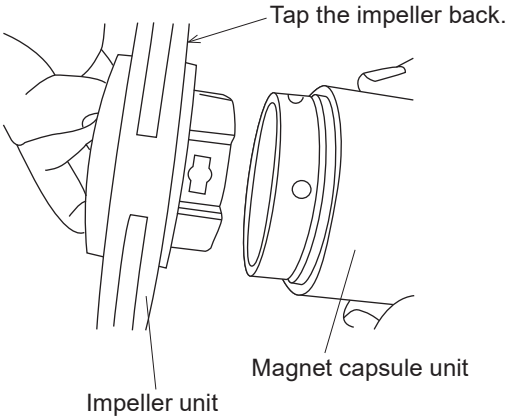

NOTE: If the impeller unit can not be removed from the magnet capsule unit in the above method, immerse the impeller unit in hot water of 80°C for five minutes. And then tap the back side of the impeller unit by a plastic hammer.

⚠ CAUTION
Be careful not to get scaled with hot water.

Impeller unit mounting

a. Press the impeller unit into the magnet capsule unit according to mating parts. Make sure that the through-hole on the magnet capsule unit comes under the U-shape hole on the impeller unit and there is no clearance between the end of press-fitting part and a bearing surface.

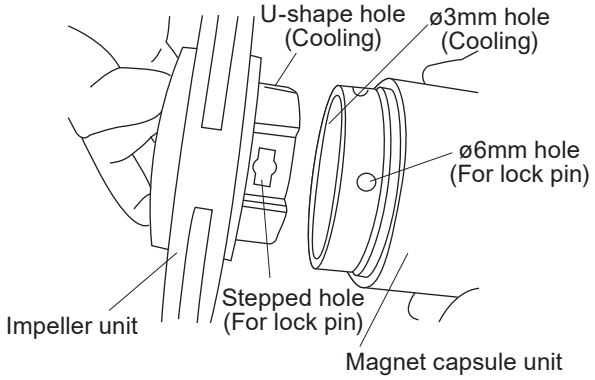

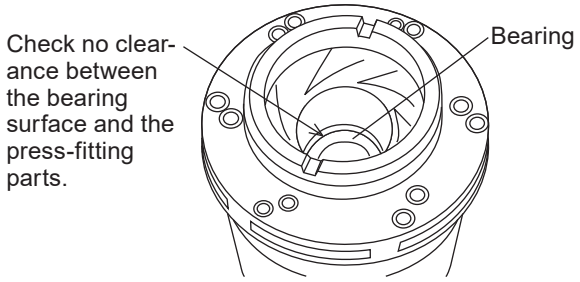

NOTE: If the fitting is too tight to pressfit the impeller unit, immerse the magnet capsule unit into hot water of 80°C for five minutes.

⚠ CAUTION
Be careful not to get scaled with hot water.

b. After fitting the impeller unit, insert the lock pins all the way seated in the lock pin holes from the inside. Use a flat-head screwdriver to turn the pins 90 degrees clockwise from the outside while holding the pins from the inside. Once it clicks, the impeller unit is secured.

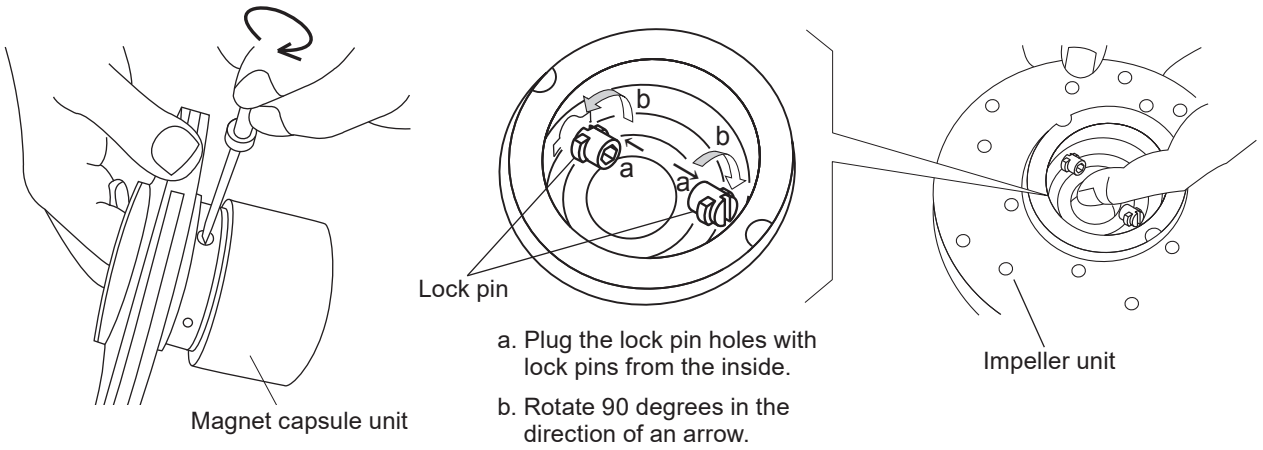

c. The lock pins can also be locked by using the 4mm hex. wrench from the inside of the impeller unit. In this case be sure to turn the wrench anticlockwise.

NOTE: The lock pins will be damaged if it is turned in reverse direction.

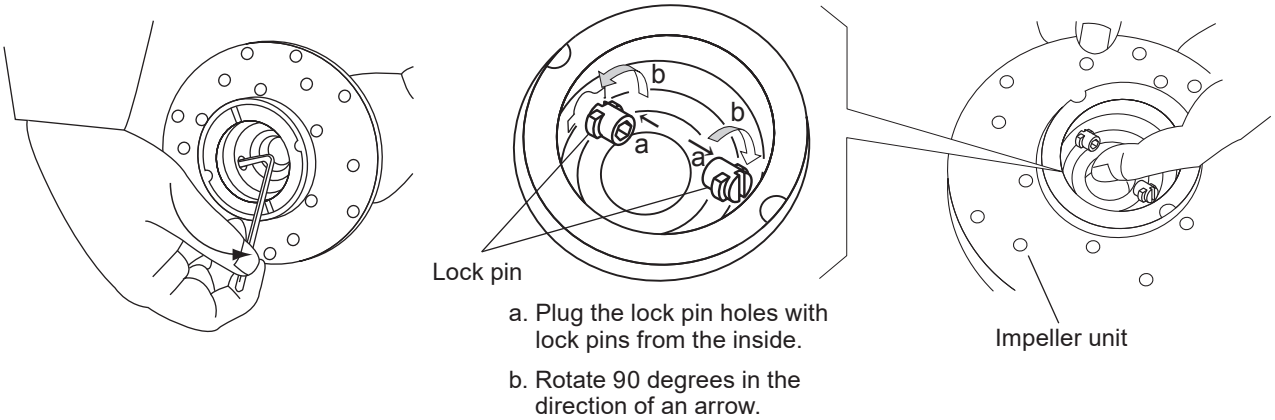

■ Drive magnet demounting

Take the following steps to demount the drive magnet from the motor.

<Pumps with a 0.75, 1.5, 2.2, 3.7 or 4.0kW motor>

- Remove the front casing from the adapter
- Remove the adapter from the motor.
- Demount the drive magnet from the motor shaft.

<Pumps with a 0.37, or 0.4kW motor>

- Remove the front casing from the adapter
- Demount the drive magnet from the motor shaft.
- Remove the adapter from the motor.

■ Drive magnet mounting

1. Make sure the motor is electrically-disconnected in advance. If the motor were to run in this process, personal injury would result.

2. Clean the motor shaft surface and the shaft hole of the drive magnet. Use a sand paper or sand blaster to remove burrs if necessary. Be careful not to drop the drive magnet, or it may break.

3. For the pumps with a 0.75, 1.5, 2.2, 3.7 or 4.0kW motor, first fit the drive magnet to the motor shaft, and then the adapter to the motor through the later steps (4 to 11).
   For the pumps with a 0.37 or 0.4kW motor (SMX-220), first fit the adapter to the motor with four M8×20 hexagon bolts and M8 washers, and then mount the drive magnet to the motor shaft through the later steps (4 to 10).

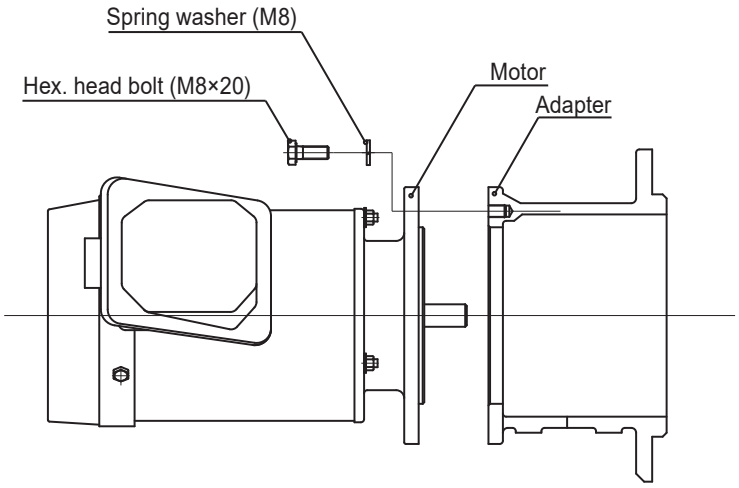

Pumps with a 0.37/0.4kW motor

4. Clean the motor shaft surface and the shaft hole of the drive magnet. Use a sand paper or sand blaster to remove burrs if necessary. Be careful not to drop the drive magnet, or it may break.

5. Adjust the depth of the hex. socket set screws in the drive magnet, so they will not hinder the insertion of the magnet to the motor shaft.

6. Mount the key to the motor shaft in place beforehand.

7. Slide the drive magnet down to the motor shaft until it bottoms out. If burrs or debris disturbs insertion, remove the drive magnet once and remove them. Also, adjust the key position if necessary.

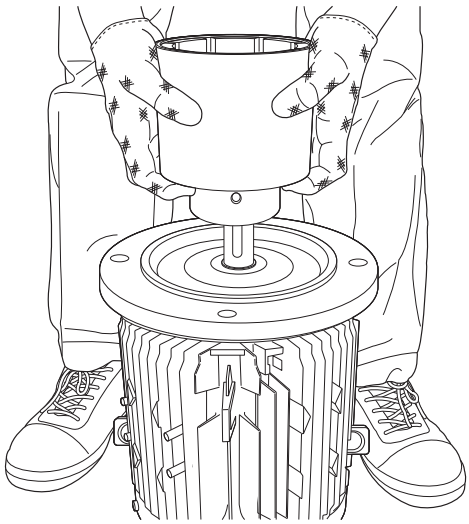

Pumps with 0.75, 1.5, 2.2, 3.7 or 4.0kW motor

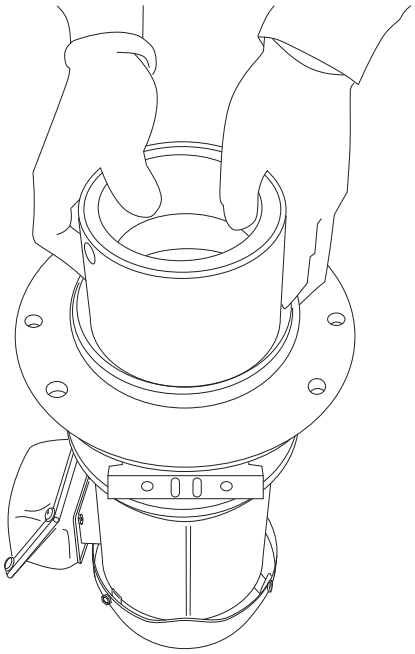

Pumps with 0.37 or 0.4kW motor

8. Check the dimension “H” is proper at each motor. Adjust the position of the drive magnet if necessary.

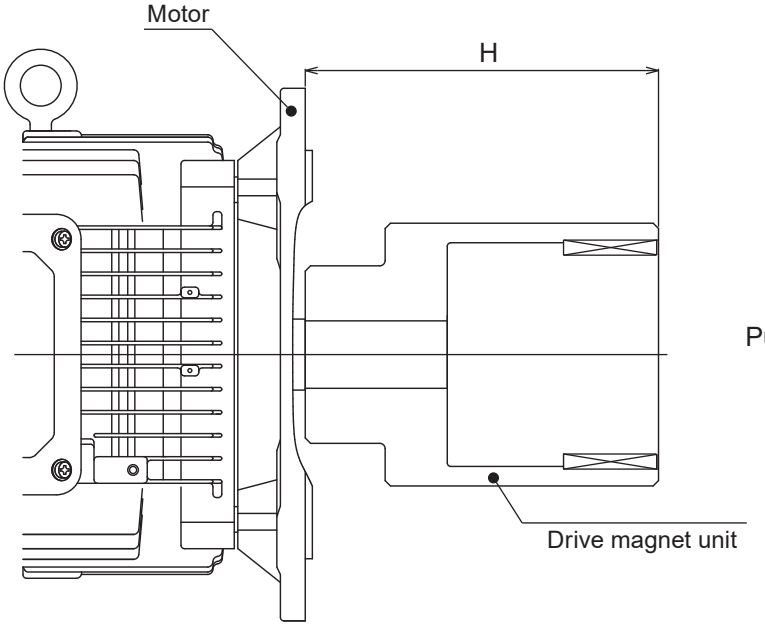

Pumps with 0.75, 1.5, 2.2, 3.7 or 4.0kW motor

Model		Motor output [kW]	Poles	H [mm]
SMX	221	0.75		119
	222	1.5		123
	441	0.75		119
	442	1.5		123
	443	2.2		123
	542	1.5		123
	543	2.2		123
	545	3.7/4.0		143

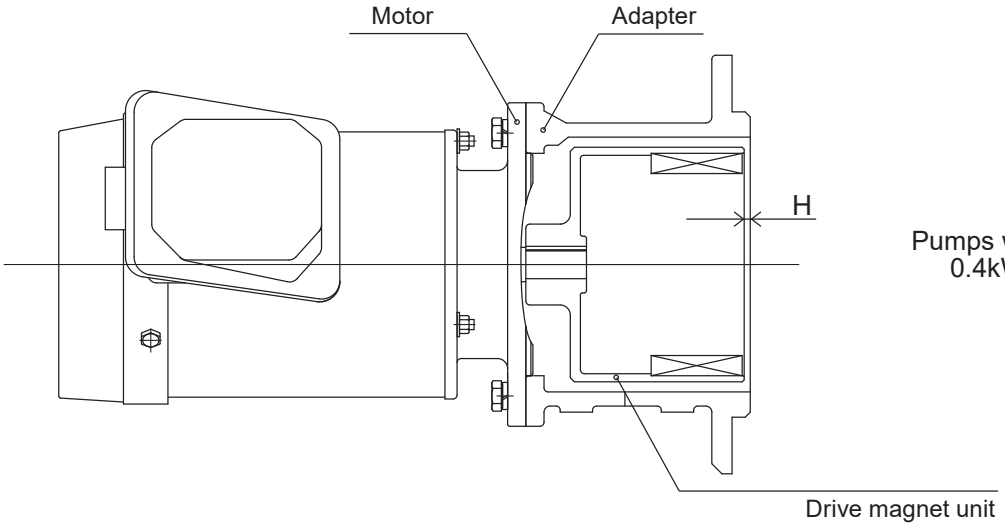

Pumps with 0.37 or 0.4kW motor

Model		Motor output [kW]	Poles	H [mm]
SMX	220	0.37/0.4	2	0

9. Use a torque wrench and tighten the hex. socket set screws by 12N·m to fix the drive magnet position. For the pumps with a 0.37 or 0.4kW motor (SMX-220), the set screws are accessible through the bottom adapter hole as shown below.

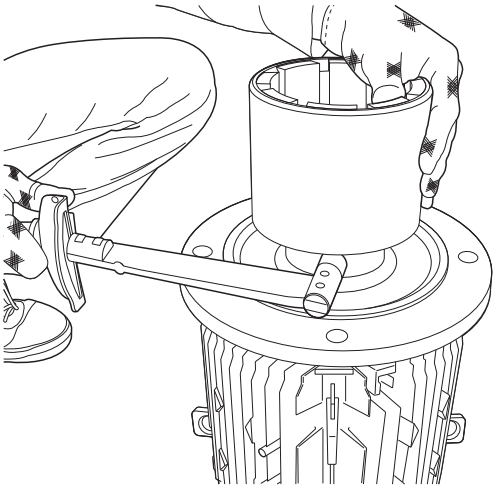

Pumps with 0.75, 1.5, 2.2, 3.7 or 4.0kW motor

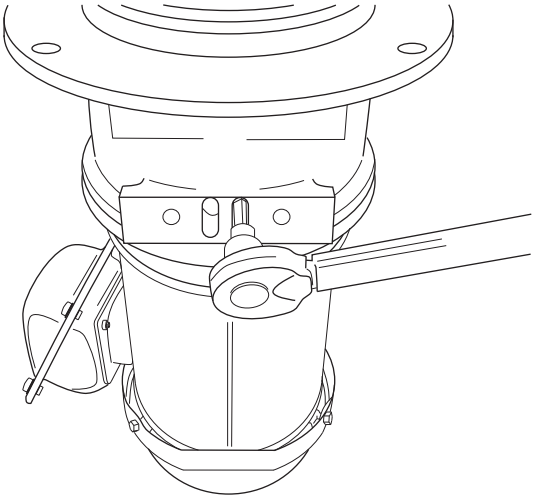

Pumps with 0.37 or 0.4kW motor

10. Check the drive magnet is fixed tight and won't loose the connection in operation.

11. Remount the adapter to the motor (Pumps with 0.75, 1.5, 2.2, 3.7 or 4.0kW motor).

NOTE: Always fit the "single" adapter part to the motor, not the combination of the adapter and the front casing (driven magnet). There is a very strong magnetic force between the drive magnet and the driven magnet. To reduce the risk of personal injury which could happen when both parts are unexpectedly and strongly pulled together, be sure to mount the adapter first to the motor, and then the front casing (driven magnet) to the adapter, on the step by step basis!

5. Mass of pumps

The table below shows the pump weight at each model. The motor weight is not included.

Model code	Motor output	Pump weight
SMX-220	0.37kW/0.4kW	13kg
SMX-221	0.75kW	15.5kg
SMX-222	1.5kW	16.0kg
SMX-441	0.75kW	16.0kg
SMX-442/-443	1.5kW/2.2kW	16.5kg
SMX-542/-543	1.5kW/2.2kW	24kg
SMX-545	3.7kW/4.0kW	32kg

*The pump weights represent the pump unit only and do not include the motor weight.
*See our approval drawing of the pump plus motor as well for total weight information.

EC DECLARATION OF CONFORMITY

A copy of the original Declaration of Conformity

(SUPPLIER'S NAME)

WE

IWAKI CO.,LTD.

(ADDRESS)

6-6 2-CHOME KANDA-SUDACHO CHIYODA-KU TOKYO JAPAN

(PRODUCT)

DECLARE UNDER OUR SOLE RESPONSIBILITY THAT THE PRODUCTS

SELF-PRIMING MAGNETIC DRIVE PUMP

(MODEL NAME)

SMX/ SMX-F SERIES

TO WHICH THIS DECLARATION RELATES ARE IN CONFORMITY
WITH THE FOLLOWING STANDARDS OR DIRECTIVES AS FAR AS APPLICABLE

(DIRECTIVES)

MACHINERY DIRECTIVE 2006/42/EC (ANNEX IIA)
RoHS DIRECTIVE 2011/65/EU

(STANDARDS)

EN ISO12100: 2010 EN809: 1998 + A1: 2009 EN IEC63000: 2018

(A PERSON WHO IS AUTHORISED TO COMPILE THE TECHNICAL FILE
IN THE COMMUNITY)

IWAKI EUROPE GMBH
SIEMENSRING 115 D-47877 WILLICH GERMANY

NOTE: THIS DECLARATION BECOMES INVALID IF TECHNICAL OR OPERATIONAL
MODIFICATIONS ARE INTRODUCED WITHOUT THE MANUFACTURER'S CONSENT.

T. Sawada.

TSUTOMU SAWADA

DEPUTY SENIOR GENERAL MANAGER,

QUALITY ASSURANCE HEAD OFFICE

Tokyo, Sep. 2, 2021

(PLACE AND DATE OF ISSUE) **(NAME AND SIGNATURE OR EQUIVALENT MARKING OF AUTHORIZED PERSON)**

DOCUMENT NO. IS-51K-337-5

UK DECLARATION OF CONFORMITY

A copy of the original Declaration of Conformity

(SUPPLIER'S NAME)

WE

IWAKI CO.,LTD.

(ADDRESS)

6-6 2-CHOME KANDA-SUDACHO CHIYODA-KU TOKYO JAPAN

(PRODUCT)

DECLARE UNDER OUR SOLE RESPONSIBILITY THAT THE PRODUCTS

SELF-PRIMING MAGNETIC DRIVE PUMP

(MODEL NAME)

SMX/ SMX-F SERIES

TO WHICH THIS DECLARATION RELATES ARE IN CONFORMITY WITH THE FOLLOWING REGULATIONS OR STANDARDS AS FAR AS APPLICABLE

(REGULATIONS)

S.I. 2008/1597 SUPPLY OF MACHINERY (SAFETY)
S.I. 2012/3032 RESTRICTION OF HAZARDOUS SUBSTANCES

(STANDARDS)

EN ISO12100: 2010 EN809: 1998 + A1: 2009 EN IEC63000: 2018

(A PERSON WHO IS AUTHORISED TO COMPILE THE TECHNICAL FILE IN THE GB MARKET)

SENSYS LIMITED
UNIT 9 POND CLOSE WALKERN ROAD
STEVENAGE HERTS SG1 3QP UK

NOTE: THIS DECLARATION BECOMES INVALID IF TECHNICAL OR OPERATIONAL MODIFICATIONS ARE INTRODUCED WITHOUT THE MANUFACTURER'S CONSENT.

T. Sawada.

TSUTOMU SAWADA
SENIOR GENERAL MANAGER,
QUALITY ASSURANCE HEAD OFFICE

Tokyo, Jun. 6, 2023

(PLACE AND DATE OF ISSUE) **(NAME AND SIGNATURE OR EQUIVALENT MARKING OF AUTHORIZED PERSON)**

DOCUMENT NO. IS-51K-593-1

CE/UKCA conformity

■ **Information on CE/UKCA conformity of pump units when the motor is fitted by the customer (dealer/operator)**

We hereby confirm the CE/UKCA conformity of our pump unit provided that the following criteria about intended use are satisfied as described in this instruction manual:

- Motor conformity in accordance with any relevant EC directives/UKCA regulations which are currently effective.
- The dimensions of a required motor flange and shaft must fit the specified pump.
- The motor must be installed to the pump according to this instruction manual.
- Guaranteed grounding
- The pump must not be repainted over our original upper coating.

Any reseller or dealer who connects the pump with a motor and markets it as a complete unit must conform to all relevant EC directives/UKCA regulations. In such cases, the reseller or dealer then becomes the manufacturer.

Waste Electrical and Electronic Equipment (WEEE)

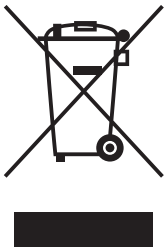

In accordance with the European Directive 2012/19/EU on waste electrical and electronic equipment, this product features the crossed-out wheelie bin symbol. When this product is disposed of in household wastes, toxic components included in it can cause major environmental and human health problems. Use appropriate waste collection systems for recovery and recycling. Contact your local distributor or nearest Iwaki company for the detailed collection systems.

IWAKI

https://www.iwakipumps.jp

IWAKI CO.,LTD. 6-6 Kanda-Sudacho 2-chome Chiyoda-ku Tokyo 101-8558 Japan
TEL: +81 3 3254 2935 FAX: +81 3 3252 8892

European Headquarter / IWAKI Europe GmbH
TEL: +49 2154 9254 0 FAX: +49 2154 9254 48
Germany / IWAKI Europe GmbH
TEL: +49 2154 9254 50 FAX: +49 2154 9254 55
The Netherlands / IWAKI Europe GmbH (Netherlands Branch)
TEL: +31 74 2420011 FAX: +49 2154 9254 48
Italy / IWAKI Europe GmbH (Italy Branch)
TEL: +39 0445 561219 FAX: +39 0445 569088
Spain / IWAKI Europe GmbH (Spain Branch)
TEL/FAX: +34 934 741 638
Poland / IWAKI Europe GmbH (East Europe Branch)
TEL: +48 12 347 0755 FAX: +48 12 347 0900
Denmark / IWAKI Nordic A/S
TEL: +45 48 242345
Finland / IWAKI Suomi Oy
TEL: +358 10 201 0490
Norway / IWAKI Norge AS
TEL: +47 23 38 49 00

Sweden / IWAKI Sverige AB
TEL: +46 8 511 72900
Belgium / IWAKI Belgium N.V.
TEL: +32 13 670200 FAX: +32 13 672030
France / IWAKI France S.A.
TEL: +33 1 69 63 33 70 FAX: +33 1 64 49 92 73
U.S.A. / IWAKI America Inc.
TEL: +1 508 429 1440 FAX: +1 508 429 1386
Brazil / IWAKI Do Brasil Comercio De Bombas Hidraulicas LTDA.
TEL/FAX: +55 19 3244 5900
China (Shanghai) / IWAKI Pumps (Shanghai) Co., Ltd.
TEL: +86 21 6272 7502 FAX: +86 21 6272 6929
China (Hong Kong) / IWAKI Pumps Co., Ltd.
TEL: +852 2607 1168 FAX: +852 2607 1000
China (Guangzhou) / GFTZ IWAKI Engineering & Trading Co., Ltd.
TEL: +86 20 84350603 FAX: +86 20 84359181
China (Shenzhen) / IWAKI Pumps (Shenzhen) Co., Ltd.
TEL: +86 0755 8656 3696

Singapore / IWAKI Singapore Pte Ltd.
TEL: +65 6316 2028 FAX: +65 6316 3221
Indonesia / IWAKI Singapore Pte Ltd. (Indonesia Office)
TEL: +62 21 6906606 FAX: +62 21 6906612
Malaysia / IWAKIm SDN. BHD.
TEL: +60 3 7803 8807 FAX: +60 3 7803 4800
Korea / IWAKI Korea Co., Ltd.
TEL: +82 2 6238 4800 FAX: +82 2 6238 4801
Taiwan / IWAKI Pumps Taiwan Co., Ltd.
TEL: +886 2 8227 6900 FAX: +886 2 8227 6818
Thailand / IWAKI (Thailand) Co., Ltd.
TEL: +66 2 322 2471 FAX: +66 2 322 2477
Australia / IWAKI Pumps Australia Pty Ltd.
TEL: +61 2 9899 2411 FAX: +61 2 9899 2421

T612-10 '26/09