IWAKI PUMPS

IWAKI Metering Pump AX series

Low pressure hydraulic diaphragm type

Instruction Manual

⚠Read this manual before use of product

Thank you for selecting the IWAKI METERING PUMP AX series. This instruction manual deals with "*Safety Instructions*", "*Outline*", "*Installation*", "*Operation*" and "*Maintenance*" sections.

Please read through this instruction manual to ensure the optimum performance, safety and service of your pump.

Contents

Important instructions ····· **1**

Safety instructions ····· **2**

Outline 1. Unpacking & Inspection ····· 6

2. Principle of Operation ····· 6

3. Identification Codes ····· 7

4. Specifications ····· 9

5. Pump mechanism & Precautions ····· 12

Installation 6. Before Installation ····· 15

Operation 7. Before Operation ····· 19

Maintenance 8. Maintenance & Inspection ····· 22

9. Troubleshooting ····· 26

10. Disassembly & Assembly ····· 27

11. Normal Consumable Parts ····· 37

12. Exploded View ····· 38

This instruction manual should be kept on hand by the end user for quick reference.

Contact us or your nearest dealer if you have any questions.

Important instructions

For the Safe and Correct Handling of the Pump

- "Safety Instruction" section deals with important details about handling of the product. Before use, read this section carefully for the prevention of personal injury or property damage.
- Observe the instructions accompanied with "WARNING" or "CAUTION" in this manual. These instructions are very important for protecting users from dangerous situations.
- The symbols on this instruction manual have the following meanings:

⚠ **WARNING**	**Nonobservance or misapplication of "Warning" sections could lead to a serious accident which may result in death.**
⚠ **CAUTION**	**Nonobservance or misapplication of "Caution" sections could lead to personal injury or property damage.**

Types of Symbols

⚠ Indicates that "Warning" or "Caution" must be exercised. Inside this triangle, a concrete and practical image provided as a warning or caution message is depicted.

⃠ Indicates a prohibited action or procedure. Inside or near this circle, a concrete and practical image of the activity to be avoided is depicted.

❗ Indicates an important action or procedure which must be performed or carried out without fail. Failure to follow the instructions herein can lead to malfunction or damage to the pump.

⚠ Export Restrictions

Technical information contained in this instruction manual might be treated as controlled technology in your countries, due to agreements in international regime for export control. Please be reminded that export license/permission could be required when this manual is provided, due to export control regulations of your country.

Safety instructions

⚠WARNING

- **Turn off power before service**

  Risk of electrical shock. Be sure to turn off power to stop the pump and related devices before service is performed.

Turn off power

- **Stop operation**

  If you notice any abnormal or dangerous conditions, suspend operation immediately and inspect/solve problems.

- **Do not use the pump in any condition other than its intended purpose**

  The use of the pump in any conditions other than those clearly specified may result in failure or injury. Use this product in specified conditions only.

Prohibition

- **Do not modify the pump**

  Alterations to the pump carry a high degree of risk. It is not the manufacturer's responsibility for any failure or injury resulting from alterations to the pump.

No modification

- **Wear protective clothing**

  Always wear protective clothing such as an eye protection, chemical resistant gloves, a mask and a face shield during disassembly, assembly or maintenance work. The specific solution will dictate the degree of protection. Refer to SDS precautions from the solution supplier.

Wear protective gear

- **Use strong ropes (chains) for lifting up the pump**

  Keep away from the pump while it is lifted up for installation. Serious injury may result if lifting ropes (chains) break. Observe the working load limit of the ropes (chains).

Prohibition

- **Use eye bolts**

  Use eye bolts to lift the pump if they are provided. Otherwise the pump may break and accidentally fall down, resulting serious injury.

Prohibition

- **Do not damage the power cable**

  Do not pull, knot, or crush the power cable. Damage to the power cable could lead to a fire or electrical shock if cut or broken.

Prohibition

- **Do not stand on the pump**

  Injury or damage may result when the pump turns over.

Prohibition

Safety instructions

⚠WARNING

- **Pay attention to reciprocating motion**

  The piston is reciprocating in the bracket. Do not enter the finger or other stuff in the bracket. Otherwise it may cause serious injury.

- **Do not remove or mount the motor fan cover during operation**

  The rotating fan can catch the finger, hand, or hair and can cause serious injury. Mount the cover back to its original position after adjustment and inspection. Also, do not place waste clothes near rotating parts.

- **Qualified personnel only**

  The pump should be handled or operated by qualified personnel with a full understanding of the pump. Any person not familiar with the product should not take part in the operation or maintenance of the pump.

- **Before starting the pump**

  Be sure there is no one around the pump before connecting power. The pump doesn't have an ON-OFF switch. The pump starts as a power cable is plugged in.

- **Do not close a discharge or a suction valve during operation**

  Operation with closed discharge may cause a sudden pressure rise in the pump and piping. This can break the pump and motor.

- **Before a long period (more than 1 year) of storage**

  Drain liquid from the pump and clean the inside.

Safety instructions

⚠ CAUTION

- **Use specified power only**

  Do not apply power other than that specified on the nameplate. Otherwise, failure or fire may result. Ensure the pump is properly grounded.

- **Ventilation**

  Fumes or vapors can be hazardous with certain solutions. Ensure proper ventilation at the operation site.

- **Do not install/store the pump:**

  1. In a flammable/explosive/corrosive atmosphere.
  2. In a dusty/humid environment.
  3. Where ambient temperature can exceed 0-40ºC.
  4. In direct sunlight or wind & rain (except an outdoor type).
  5. Under mechanical vibrations.

  Prohibition

- **Spill precautions**

  Ensure protection and containment of solution in the event of plumbing or pump damage (secondary containment). Do not drain chemical directly onto the ground. Disposal of harmful liquid should be done in accordance with local laws.

- **Do not touch the pump or pipe with bare hands**

  The surface temperature of the pump or pipe rises high along with liquid temperature in operation.

  Caution

- **Do not place explosive or flammable material near the pump**

  Check for oil leakage. Repair as necessary and wipe any oil off. Store the oil in accordance with local laws.

  Fire ban

- **Grounding**

  Risk of electrical shock. Always properly ground the pump.

  Grounding

- **Install a GFCI (earth leakage breaker)**

  Risk of electrical shock. Purchase and install a GFCI (earth leakage breaker) separately.

  Electrical shock

- **If foreign matter enters the pump**

  Turn off power and remove foreign matter. Operation with foreign matter can cause damage or failure.

Safety instructions

⚠ CAUTION

- **Preventative maintenance**
  Follow instructions in this manual for replacement of wear parts. Do not disassemble the pump beyond the extent of the instructions.

- **Do not use a damaged pump**
  Use of a damaged pump could lead to an electric shock or leakage.

- **Disposal of a used pump**
  Dispose of any used or damaged pump in accordance with local rules and regulations. If necessary, consult a licensed industrial waste disposal company.

- **Do not cover the pump with cloth**
  The heat that stays in the pump can cause fire or failure. Provide adequate ventilation.

- **Non-freezing**
  Frozen liquid may damage the pump and piping. Drain liquid before leaving it at a freezing temperature or use measures to prevent liquid from freezing.

- **Solution in the discharge line may be under pressure**
  Release the pressure from the discharge line before disconnecting plumbing or disassembly of the pump to avoid solution spray.

- **Pay attention to rotating parts**
  Be careful not to be caught in rotating parts such as the coupling and shaft. The rotating parts can catch the finger, hand, or hair and can cause serious injury. Also, do not place waste clothes near rotating parts.

- **Do not remove the coupling cover during operation**
  Touching the shaft when it is rotating, serious injury may result.

- **Do not wet the pump with solution or water**
  Solution enters the pump through the air breather and corrodes oil/metallic parts, resulting in pump failure.

- **Keep labels clean**
  If the nameplate or labels have become unglued or illegible, contact us to replace them with new ones.

Outline

1. Unpacking & Inspection

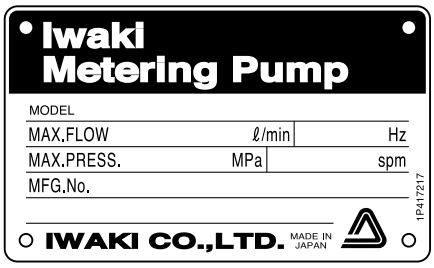

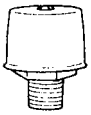

Air breather

After unpacking the pump, check the following points to see if the product conforms to your order. If you find any problems, contact us or your nearest distributor.

1. Do the model, discharge pressure, stroke number, and other details on the nameplate correspond to your order?

2. Does the package contain the following accessories?

   Air breather × 2

3. Is there no transit damage and no loose bolt/nut?

2. Principle of Operation

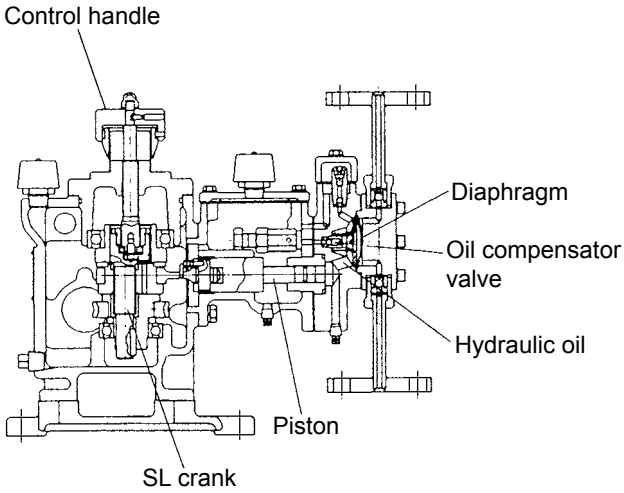

The IWAKI metering pump AX-series is designed for chemical processing.
This series has a driving unit that consists of the SL crank mechanism, a spherical diaphragm, and an oil compensator valve assembly.

Motor rotation is adjusted by the gear reducer and is converted to reciprocating motion by the SL crank mechanism. This reciprocating motion is transmitted by means of a piston to the diaphragm through hydraulic oil.
The discharge rate is adjusted by changing stroke length via the control handle.

3. Identification Codes

Driving unit — Pump unit — Motor unit

2 AXK W — DL 52 S6 S — 04 E F S

① ② ③ ④ ⑤ ⑥ ⑦ ⑧ ⑨ ⑩ ⑪

Driving unit — Pump unit — Motor unit

2 AXK W — MT — 04 E F S

① ② * ⑧ ⑨ ⑩ ⑪

① Number of pump heads

No symbol: Single pump head

2: Multiple pump head (Numerical code shows the number of parallel pump heads)

② Driving unit

Mode	Full Stroke Length	Standard Motor Output
AXJ	15 mm	0.2 kW
AXK	24 mm	0.4 kW
AXA	30 mm	0.75 kW
AXB	40 mm	1.5 kW

③ Reducer

Reduction Code	Reduction Ratio	Stroke Rate (50/60 Hz)
G	1/30	48/58 spm
W	1/20	72/86 spm
H	1/15	96/116 spm
R	1/12	120/- spm (50 Hz only)

④ Pump head type

Code	Pump Head Type
DL	Low pressure single hydraulic diaphragm
WL	Low pressure double hydraulic diaphragm

⑤ Piston diameter: The figures represent the piston diameter in mm.

⑥ Material code

Code	Main wet end materials
S6	SUS316 or SCS14
VS	PVC and SUS316
VC	PVC and Ceramic
TC	Fluororesin

⑦ Wet end materials (Make to order)

S: Non-standard material

Special valves

Diaphragm rupture detector

Special pump head and hydraulic unit

⑧ Motor output

Code	Output
02	0.2 kW
04	0.4 kW
07	0.75 kW
15	1.5 kW
22	2.2 kW

⑨ Stroke length adjustment

Code	Stroke Adjustment Type
Without code	Manual
E	Electric servo
A	Air servo (with A-A positioner)
D	Air servo (with E-A positioner)

⑩ RPM control

Code	RPM Control
Without symbol	Fixed rpm
F	Inverter motor
V	VS motor

⑪ Motor unit

S: Special base

Pulse generator

Customized gear and motor unit

*Multiple application code between different pump types

W-MT	The same driving unit but different pump heads
-MT	Different driving units or different reduction ratios.

NOTE: If pumps have different driving units, the largest driving unit code is indicated in ②.

4. Specifications

■ Standard specifications (Single application)

Model	Piston bore	Stroke Length	Discharge rate L/min (at spm)							Max discharge pressure (MPa) {kgf/cm2}	Standard Motor (kW)
			50 Hz Stroke rate (spm)				60 Hz Stroke rate (spm)				
			G:48	W:72	H:96	R:120	G:58	W:86	H:116		
AXJ-	7	0-15	0.022	0.034	0.045	0.056	0.027	0.040	0.054	1.0 {10}	0.2
	11		0.061	0.092	0.123	0.153	0.073	0.110	0.147		
	15		0.118	0.177	0.236	0.295	0.142	0.212	0.283		
	22		0.254	0.381	0.508	0.636	0.305	0.458	0.610		
	30		0.478	0.717	0.956	1.19	0.574	0.860	1.14		
	42		0.918	1.37	1.83	2.29	1.10	1.66	2.21	0.7 {7}	
AXK-	30	0-24	0.741	1.11	1.48	1.85	0.892	1.34	1.78	1.0 {10}	0.4/0.2
	42		1.45	2.18	2.90	3.63	1.75	2.62	3.50		
	52		2.25	3.37	4.50	5.62	2.71	4.07	5.42	0.7 {7}	
	68		3.89	5.83	7.73	9.73	4.68	7.03	9.38	0.4 {4}	
AXA-	42	0-30	1.83	2.75	3.67	4.59	2.21	3.32	4.42	1.0 {10}	0.75/0.4
	52		2.81	4.22	5.63	7.03	3.39	5.09	6.78		
	68		4.81	7.21	9.62	12.0	5.79	8.70	11.6	0.7-0.8 {7-8}	
	85		7.52	11.2	15.0	18.8	9.05	13.6	18.1	0.4-0.5 {4-5}	
	100		10.5	15.7	21.0	26.3	12.6	19.0	25.3	0.3 {3}	
AXB-	52	0-40	3.75	5.62	7.50	9.38	4.51	6.78	9.04	1.0 {10}	2.2/1.5/0.75
	68		6.41	9.62	12.8	16.0	7.72	11.6	15.4		
	85		10.0	15.0	20.0	25.0	12.0	18.1	24.1	0.7-1.0 {7-10}	
	100		13.7	20.5	27.4	34.3	16.5	24.8	33.0	0.5-0.7 {5-7}	
	122		20.6	30.9	41.3	51.6	24.8	37.3	49.7	0.3-0.5 {3-5}	

Discharge rate is based on the pumping with clean water at normal temperature and the maximum discharge pressure.

■ Common specifications

1. Wet end materials

Material code	SUS type			PVC type		Fluororesin
	S6			VS	VC	TC
Pump size	AXJ-07, 11, 15, 22 & 30	AXJ-42 AXK-30 & 42	AXK-52 & 68	All sizes		
Pump head	SUS316	SCS14		PVC		Fluororesin
Valve	SUS316 equivalent			SUS316 equivalent	Ceramic	
Valve seat	SUS316			PVC		Fluororesin
Gasket	PTFE			-		
O ring	-			EPDM	FKM	
Diaphragm	PTFE					

SUS316 : Stainless steel
PTFE : Polytetrafluoroethylene
FKM : Fluororesin
SCS14 : Stainless steel casting (equivalent to SUS316)
PVC : Hard vinyl chloride
EPDM : Ethylene-propylene-diene-methylene

2. Liquid temperature range: 0 to 100 ºC (SUS type), 0 to 50 ºC (PVC type), 0 to 40 ºC (Fluororesin type)

3. Ambient temperature : 0 to 40 ºC

4. Standard motor : Flange mounting (IEC Standard) Others : Coupling connection on the base

NOTE: Specifications and dimensions are subject to change without notice for product improvement.

Outline

■ Product line-up

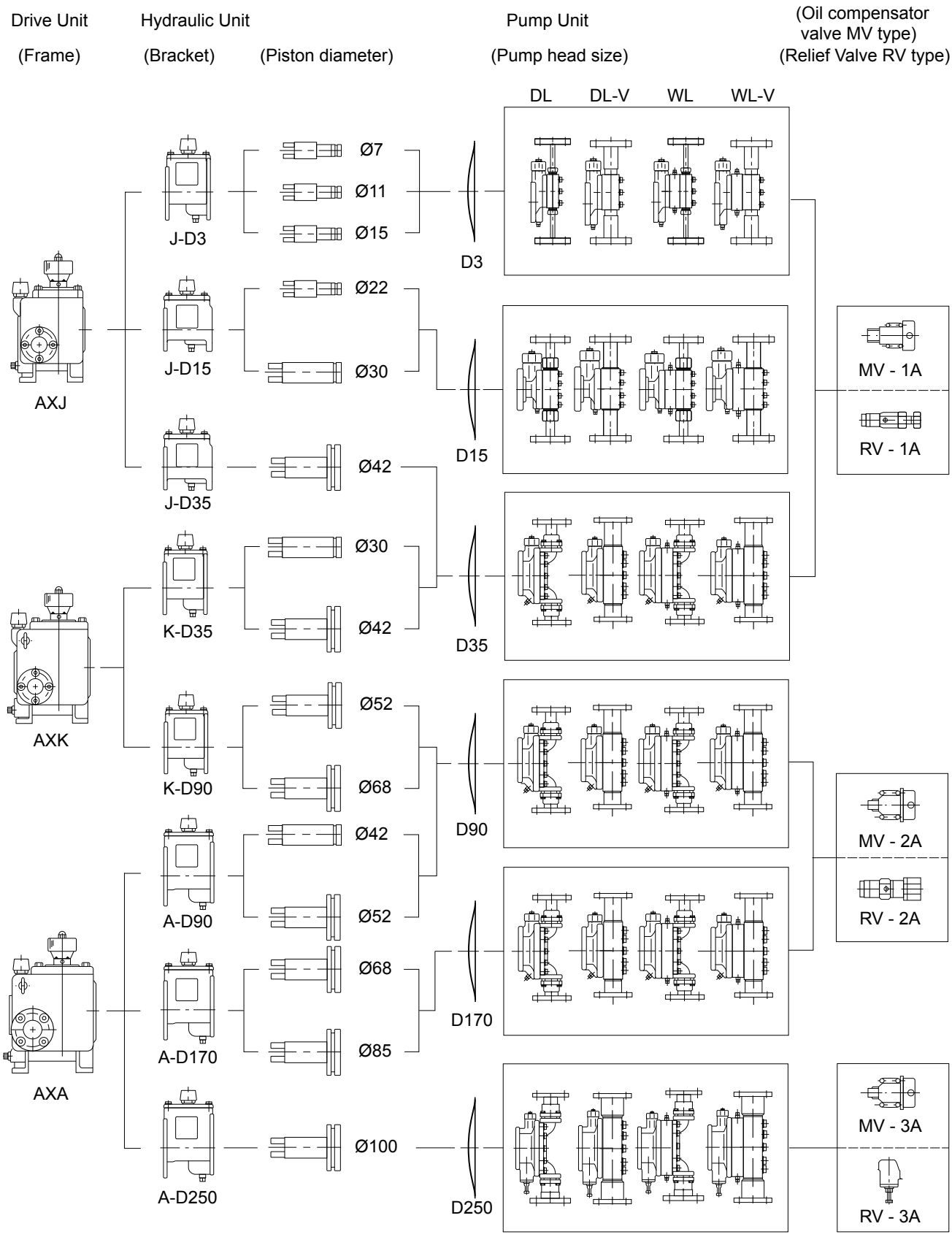

Outline

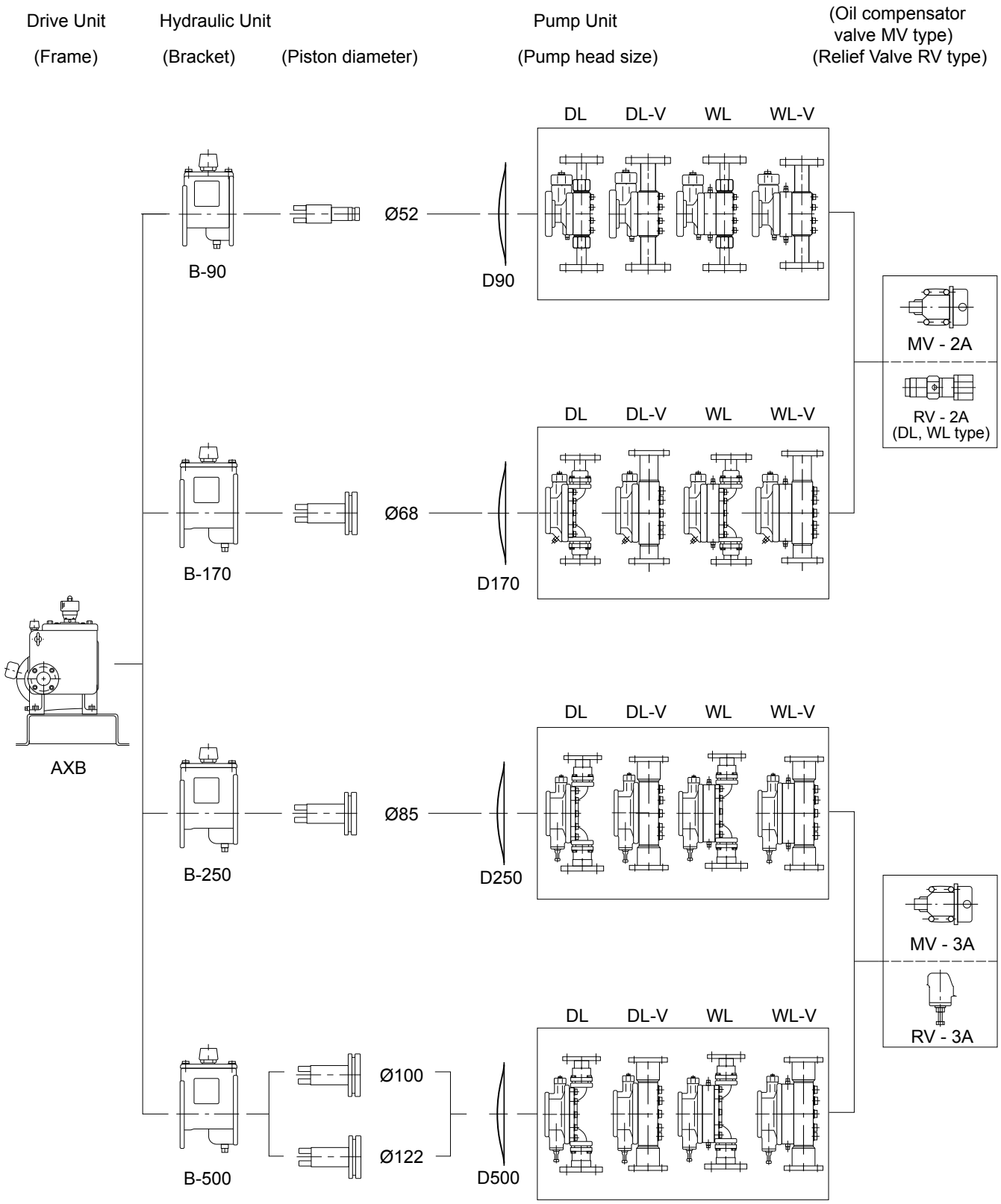
Drive Unit
(Frame)
Hydraulic Unit
(Bracket)
(Piston diameter)
Pump Unit
(Pump head size)
(Oil compensator valve MV type)
(Relief Valve RV type)
DL
DL-V
WL
WL-V
B-90
Ø52
D90
B-170
Ø68
D170
B-250
Ø85
D250
B-500
Ø100
Ø122
D500
AXB
MV - 2A
RV - 2A
(DL, WL type)
MV - 3A
RV - 3A

5. Pump mechanism & Precautions

■ Components

1. Reduction mechanism

The motor speed is reduced by a worm and a worm wheel. The standard reduction ratios are 1:30, 1:20, 1:15, and 1:12 (for 50Hz only).

2. SL crank mechanism

The SL crank mechanism is designed to adjust the stroke length and consists of an eccentric disc and SL crank (Both the components have the same eccentricity), and coupling disc.

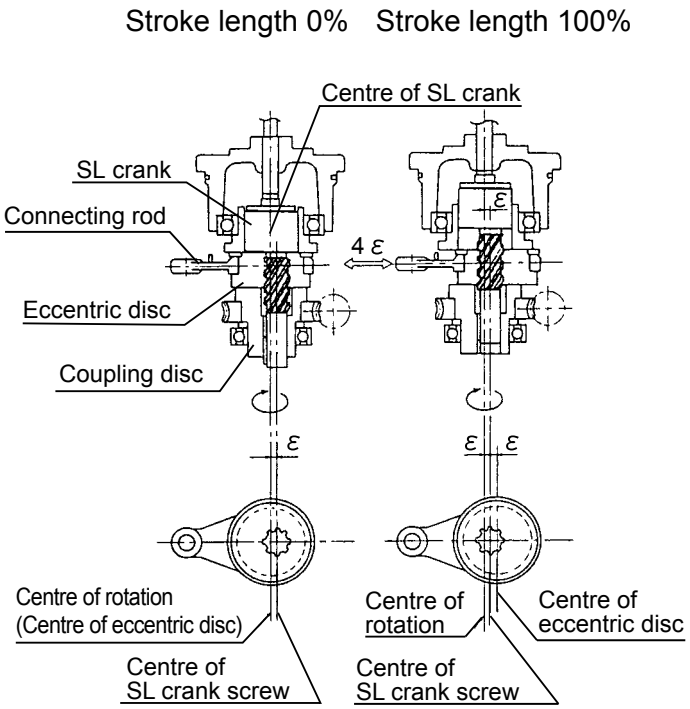

<Principle of SL crank mechanism>

- When stroke length is set to 100% (SL crank is pulled up), the eccentric disc starts rotation around the SL crank screw. At this moment, the rotation of eccentric disc shifts away from the centre of SL crank and stroke length reaches the double of the eccentricity degree at longest. (The left diagram shows that the eccentric disc has rotated 180° and the eccentricity degree is 2ε.)

- When stroke length is set to 0% (SL crank is pushed down), the centre of the eccentric disc is aligned with the centre of SL crank.
  The eccentricity degree ε between the SL crank and the centre of eccentric disc is offset and eccentricity degree stays 0.

3. Stroke length control

To increase or decrease the discharge rate, change stroke length by rotating the control handle.

4. Diaphragm

The diaphragm (IWAKI's original design) is hemispherical shape and its shape variation is utilized to make pumping action. The hemispherical shape relieved the diaphragm form tensile stress and extended its life.

5. Oil compensator valve

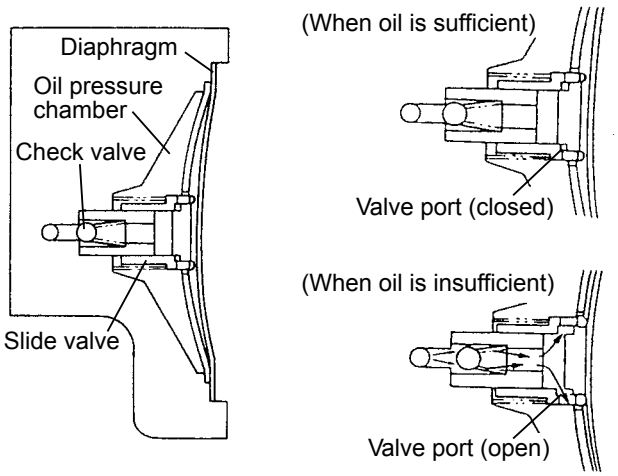

The oil compensator valve unit consists of a slide valve and a check valve. When the oil is insufficient, those two valves operate and feed oil automatically into the oil pressure chamber to keep the required oil level. Oil is supplied as the diaphragm pushes the slide valve to open the valve port.

6. Automatic air vent valve

For the prevention of air lock, this valve functions to automatically expel the air produced in the hydraulic oil while the pump is in operation so as to maintain metering precision.

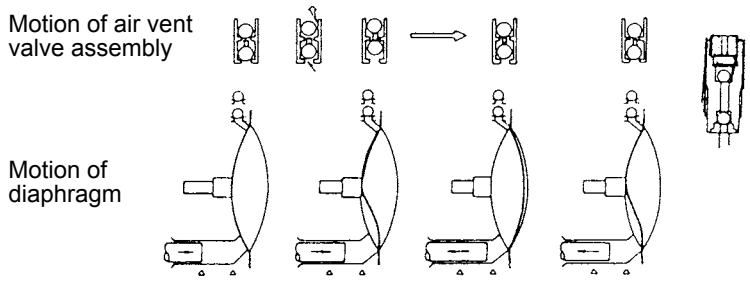

This valve assembly comprises two-stage valve balls provided with the upper and lower sealed surfaces. In brief moments during a discharge stroke, when the balls move from the lower sealed surface to the upper one, the air remaining in the oil pressure chamber is expelled together with a very small amount of oil.

7. Air breathers

They control pressure fluctuation in the driving unit and hydraulic unit. If plugs are not changed to air breathers at oil replacement, the air cannot be expelled and an appropriate amount of oil cannot be filled. (See “6. Before Installation” Item 6 on page 16.)

8. Relief valve

The relief valve functions when the pressure in the hydraulic unit rises above a set level in order to prevent the damage to the diaphragm & the driving unit and the overload to the motor.

Outline

■ Precautions

1. Prohibition on shutoff operation

Make sure to open all related valves on both the discharge & suction side piping before operation. Do not throttle or close any valves while the pump is in operation.

2. Influence by temperature change

Liquid character changes in viscosity, steam pressure, corrosion resistance or other factors as the temperature varies. Pay close attention to liquid character change.

►Allowable liquid temperature range: 0 to 100 ºC (SUS type), 0 to 50 ºC (PVC type)
0 to 40 ºC (Fluororesin type)

NOTE: When high-temperature liquid (about 100 ºC) is transferred under heat cycle, creep phenomenon can reduce the seal performance on the diaphragm. Periodically tighten the bolts on the pump head (See page 33).

NOTE: Refer to the corrosion resistance table for the allowable liquid temperature range. If you have any questions contact us or your nearest distributor.

►Allowable operating ambient temperature range is from 0 to 40 ºC.

3. Effect of viscosity on performance

Discharge rate reduces when the pump transfers viscous liquid instead of clean water. Secure a constant flow by keeping the viscosity change minimum. NPSHr increases as viscosity becomes greater. Increase NPSHa at an adequate level when pumping a viscous liquid.

4. Handling of slurry

1. Note that a metering accuracy is less than clean water.
2. When slurry is pumped at a low stroke length, slurry precipitates in the pump head valves and the valves are stuck.
3. The life of diaphragm becomes shorter due to the abrasive character of slurry.

6. Before Installation

■ Recommended piping

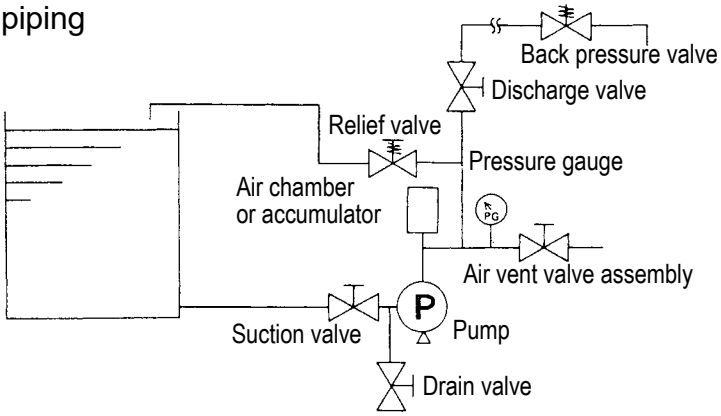

The piping system should be designed to fully meet the suction and discharge requirements. Study piping layout thoroughly when handling slurry solution.

■ Installation location

1. Position the pump as close to the supply tank as possible and below the lowest possible liquid level in the tank. In addition, try to arrange the suction piping as short as possible.
2. For ease of maintenance, keep enough space around the pump. Take measures to protect the motor and power distribution equipment in a time of disasters such as a flood.
3. The pump should be installed in a flat area where is free form the vibration caused by other machines.

■ Foundation work

1. A concrete foundation on the soft ground can cause settlement or inclination. Have the foundation wide enough to bear the weight of pump and thick enough to prevent the damage by freezing in winter.
2. Wait until the concrete foundation is fully set. Drill the foundation for foundation bolts on the drawing or the base. Level the floor surface as much as possible.

■ Installation

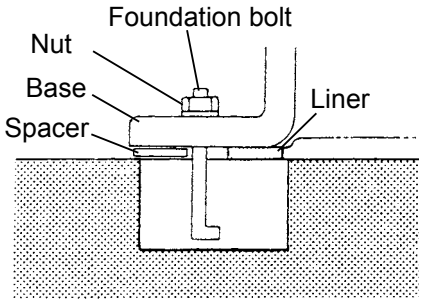

Remove the liner before tightening the nut.

1. After the foundation work is completed, place the pump on the concrete foundation. Do not lift up the pump by holding the motor, otherwise abnormal motor noise or motor damage may result. Always use eye bolts on the flange motor type or the base holes on the motor coupling type to lift up the pump for the placement.
2. Insert the liner in between the pump base and the concrete foundation to make a space for mortar grouting. The liner should be inserted evenly to keep the pump horizontally.
3. Screw a nut in the foundation bolt until the bolt top-end comes out from the nut. And place it in the drilled hole through the base as the left figure shows.

4. Fill the foundation bolt hole with mortar and leave it for a few days until it hardens.
   Check mortar level comes up to the foundation concrete surface. Use the level to see levelness.
5. After the mortar has hardened, remove the liner and check the pump is horizontally-emplaced. Then tighten the nut of the foundation bolt. If the pump is not level, insert a spacer under the bottom of the base to keep levelness.
6. Remove the plugs on the driving and hydraulic units. Apply sealing tape to the thread of the air breathers and then screw them in. Turn hexagonal nuts with a wrench to mount air breathers.

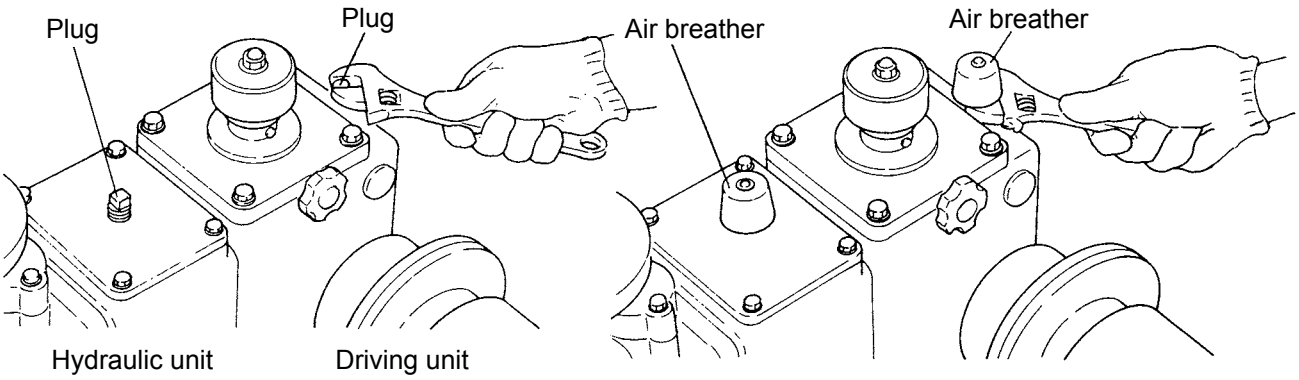

7. For the motor coupling type, centre the coupling parts.
   The couplings connect the motor shaft to the drive unit shaft.
   After installation and plumbing are completed, the pump base can deform due to the weight of the piping on the pump, resulting in the misaligned couplings, abnormal noise, vibration and excessive wear on the motor bearings and drive unit bearings.

   Ensure that the angular or parallel misalignment does not exceed:
   ► 0.1mm for the 0.2, 0.4 and 0.75kW motor.
   ► 0.2mm for the 1.5, 2.2, 3.7, 5.5 and 7.5kW motor.

   If necessary, insert spacers on the deformed base to align the couplings within the above value.

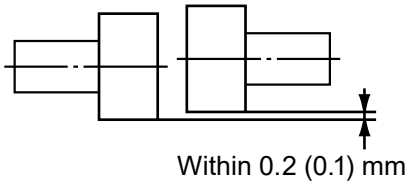

   Every time the pump is disassembled and reassembled, check the alignment to ensure proper operation.

NOTE: Turn off the pump and electrical circuit breakers before performing the alignment.

Installation

■ Piping precautions

1. Have the piping short as much as possible with the minimum number of bends. Do not allow any projections where the air may be trapped.
2. Provide pipe supports so that the piping weight does not totally weigh the pump.
3. If the pump is used to transfer a high or low-temperature liquid, install the flexible piping to protect the pump from the expansion and contraction of piping by thermal stress.
4. Do not make U-shaped section on piping if sedimentary slurry is to be transferred. In this case, provide a drain plug in the lower most section of the piping.
5. If a viscous, toxic, or sticky liquid is to be transferred, provide a flushing system to facilitate maintenance and inspection.
6. Select the piping material, taking account of the corrosion resistance to liquid and the pressure to piping.
7. Clean the inside of pipes before installation. Blind covers are provided at the inlet and outlet of the pump to prevent foreign matter from entering. Remove them and then connect pipes.
8. If there is a risk of the liquid freezing in piping, keep the piping warm. Equip the suction piping with a drain cock to drain liquid.

■ Suction piping

1. Arrange a suction pipe bore, taking account of NPSH (normally it should be wider than pump inlet).
2. Set suction piping in the flooded suction system at any liquid level. The pump is not capable of self priming depending on service conditions. Contact us for detail.
3. Secure tight joint connections so as not to suck the air. If the air enters the suction piping, discharge rate becomes unstable.
4. Install the strainer (about 40 mesh) for the prevention of foreign matter interfusion.

Installation

■ Discharge piping

1. The pump has a built-in relief valve in the hydraulic chamber for the protection of the pump. For the protection of the piping, be sure to install a relief valve on the discharge piping near the pump. The relief valve should be positioned in between the pump and discharge valve.
2. The withstand pressure of the discharge piping must be greater than the set pressure of the relief valve. Secure tight joint connection.
3. We recommend mounting an accumulator or an air chamber to reduce pulsation and inertia resistance.
4. We recommend mounting a back pressure valve so as to prevent overfeed as a result of insufficient differential pressure.
5. Install a pressure gauge for routine checks of discharge pressure. If the bourdon pressure gauge is used, install a shut valve.
6. Do not branch a discharge pipe to make 2-point injection. Each discharge rate can not be controlled.

■ Wiring

Wiring work should be done with suitable wiring instruments in accordance with the technical standards for electric installation and the indoor wiring regulations. Observe the following points.

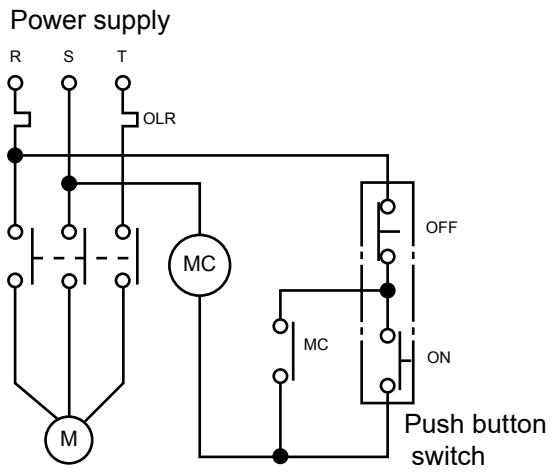

M ····· Motor
MC ····· Electromagnetic switches
ON ····· }Push button switches
OFF ····· }Push button switches
OLR ····· Overload relay

1. Use an electromagnetic switch suitable for the motor of the pump.
2. If the pump is used out of doors, wiring should not be exposed to rainwater and so on.
3. The electromagnetic switch and push button switches must be installed securely away from the pump.
4. Arrange wiring so that the motor rotates in the direction indicated by the arrow on the plate (clockwise rotation viewed from the fan cover side of the motor). Always confirm the rotation direction after setting the stroke rate at 0%.
5. Install an ampere meter to monitor the pump operation.

7. Before Operation

■ Stroke length adjustment

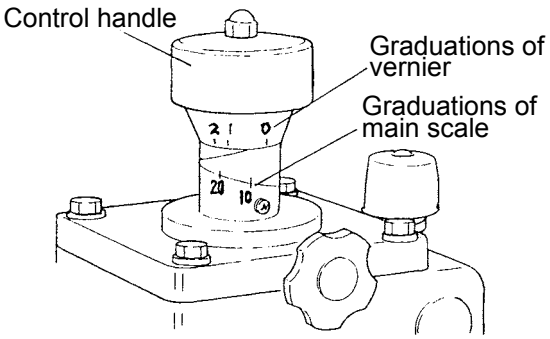

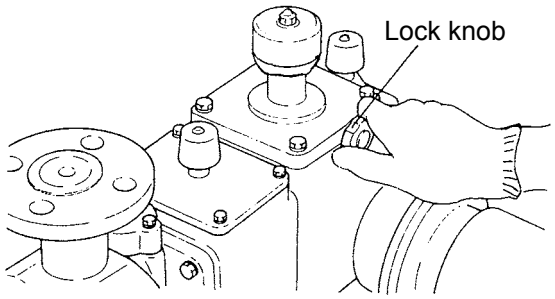

<Manual Operation>

A dial-type control handle is used to adjust the stroke. Adjustment is possible at any time during operation or stop, but it is preferable to make it while the pump is in operation. Do not rotate the control handle beyond 0 - 100 % otherwise the drive unit can break.

►Clockwise rotation decreases the stroke length and the flow.

►Counter clockwise rotation increases the stroke length and the flow.

1. Refer to the "Performance curve" or "Pump test report" for a suitable stroke length. The graduations show stroke length in %.
2. Loosen the lock knob. (The control handle is now usable.)
3. Set stroke length. The total figure of the main scale and the vernier shows stroke length in %.
4. After setting the stroke length, tighten the lock knob firmly. Confirm that it is secured and does not move.

<Electric servo or air servo operation>

Refer to the electric servo/air servo instruction manual.

■ Precheck

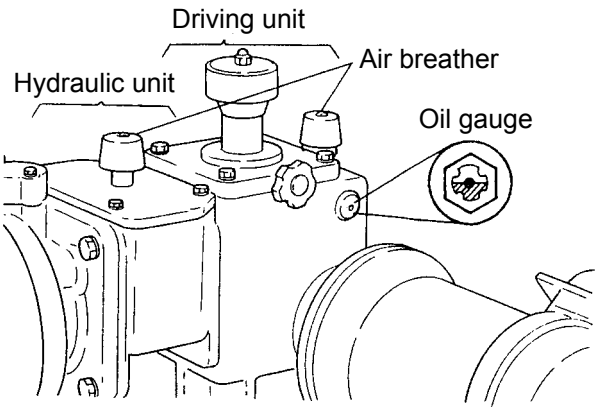

Check the following points after installation.

1. If there is any damage, loose bolt, or oil leakage.
2. If the air breathers on the driving and hydraulic units are mounted instead of the plugs (See Item 6 of “6. Before installation”.).
3. If oil level in the driving and hydraulic units is at the red label on the oil gauge.
4. If other related devices for pump operation, liquid, and power supply are ready.

Operation

■ Operation procedure

Follow the procedure below to initiate pump operation.

No.	Procedure	Points to be checked
1	○ Open related discharge and suction valves.	
2	○ Set stroke length to 0%.	
3	○ Turn on the motor to run the pump.	● Check that motor rotates in a clockwise rotation when viewed from the fan cover side of motor.
4	○ Run the pump with 0% stroke length for 10 minutes for running-in. Check that there is no abnormality during the running-in.	● In cold weather, overcurrent may take place right after start-up. This phenomenon is due to low oil temperature in pump. If this happens, keep the pump running with unloaded condition in order to raise oil temperature.
5	○ Eliminate the air out of the pump. ○ Open the air vent valve on discharge piping to release the air with liquid, or increase stroke length gradually under no-load running.	● For the AXJ-11 and 15, eliminate the air by opening the air vent valve.
6	○ Release discharge-side pressure by the air vent piping and then break in the pump with 100% stroke length for approximately 10 minutes.	
7	○ If there is no problem in break-in operation, close the air vent valve gradually to make full operation.	● Do not allow the discharge pressure to exceed the maximum pressure level or amperage to exceed the rating during operation (Refer to the nameplates). Also make a visual inspection to check there is no problem on each pump components.
8	[Checking of discharge rate] ○ Check the flow per shot under actual working conditions by using a gauge such as measuring cylinder. (The pump is ready if each shot is constant and the discharge linearity to stroke length is maintained.) ○ Make a graph that shows the relation between the flow and stroke length on the actual service condition in order to set discharge rate.	● After changing stroke length to adjust the flow, wait for one minute and then measure the discharge rate. ● The pump test result is presented at order phase if requested. The information is based on the pumping with clear water at normal temperature (not on actual liquid or through actual piping).

Operation

■ Precautions in operation

No.	Precautions	Remarks
1	○ Be sure to open all related valves on both suction and discharge side piping before starting the pump.	
2	○ Do not rotate the motor in reverse.	● Confirm that motor rotates clockwise when viewed from fan cover side.
3	○ Do not change the preset pressure of the relief valve since operating pressure is set previously according to specified operating condition.	● If the specified operating condition is greatly changed, contact us.
4	○ Regularly feed the air to the air chamber. See manufacturer's instruction manual for the detail information of the air chamber.	● Because liquid and air come directly in contact with each other in the air chamber, a small amount of compressed air is absorbed into the liquid. ● The air chamber can not operate properly as time goes by because the air keeps decreasing. Supply the air periodically.

■ Resumption after stoppage

1. When operation is resumed after a short period of stoppage (within a week), the pump can run at any stroke length.
2. If the pump is started after a long period of stoppage (more than one week), set stroke length to 0% and run the pump under unloaded condition for 10 minutes. Then increase the stroke length gradually to start normal operation.
3. Before stopping the pump in winter, open the drain valve and run the pump dry to eliminate liquid from the pump and piping for the prevention of liquid freezing. When suspending operation just for a short period of time, temporally use the band heater to keep the liquid in the pump head warm.

8. Maintenance & Inspection

■ Daily inspection

No.	Point to be checked	How to check
1	• Is the pump running smoothly?	• Check the flow meter or visual inspection. • Motor amperage
2	• Is there any change in the flow or discharge pressure?	• Check the flow meter, pressure gauge or the like. • Check the flow and the pressure gauge with nameplate.
3	• Is there any leakage from wet end parts?	• Check the sealed parts.
4	• Is oil in gear reducer and hydraulic/driving units are at required level? • Is there oil leak from an oil seal or oil deterioration?	• Check the oil gauge. • Visual inspection Use a dry or damp cloth to wipe leaked oil off. Contact us for further assistance.

■ Periodical inspection

If there is a spare pump on piping, run and maintain the spare pump from time to time to make it ready to use.

No.	Point to be checked	Remarks
1	• Check discharge & suction valves on the pump head. ►Every 6 months	• If the valves are scratched or worn, replace them. • Follow the instructions in “Disassembly & Assembly” section for replacement.
2	• Check the diaphragm. ►Inspect it every 6 months.	• Diaphragm is one of the wear parts and its life depends on working conditions. Check the diaphragm every six months and replace as necessary. Follow the instructions in “Disassembly & Assembly” section for replacement.
3	Change the oil in driving and hydraulic units. ►Replace oil at least once a year ►Quantity and brand of oil • Make sure to fill oil up to red label on oil gauge (middle position).	• When run the pump for the first time, replace oil after 500 hours. This is because initial wear is generated. If oil is contaminated after 2,000 to 3,000 hours operation, replace oil.
4	• Check if the pump head is secured by tightening bolts. ►For the fluororesin pump head type, be sure to re-tight the pump head every 6 months.	• Tighten the bolts if they are loose. • See the items 11 and 13 of "10. Disassembly & Assembly" when tightening bolts.

■ Required oil level (Reference value)

Pump model Drive unit - Piston diameter		Head size	Amount of oil (L)
AXJ —	07 11 15	D3	1.4
	22 30	D15	1.4
	42	D35	1.5
AXK —	30 42		2.2
	52 68	D90	2.7
AXA —	42 52		4.2
	68 85	D170	4.2
	100	D250	4.7
AXB —	52	D90	9.7
	68	D170	
	85	D250	
	100 122	D500	11

The amount of oil on the table is total oil in the driving and the hydraulic units.

■ Suitable oil brands

Company	Product name
JAPAN SUN OIL	SUNOCO MARVIC ATF (NOTE)

Iwaki uses the above oil.

NOTE: Sunoco MARVIC ATF was formerly called Sunoco Transmatic Fluid DEXRON II-D.

■ Oil change procedure

The oil in both the driving unit and the hydraulic unit can be changed at the same time as they are connected.

1. Stop the pump and release the pressure by opening the drain valve on the piping.
2. Remove the drain plugs on the cylinder head, the bracket, and the driving unit for drainage.

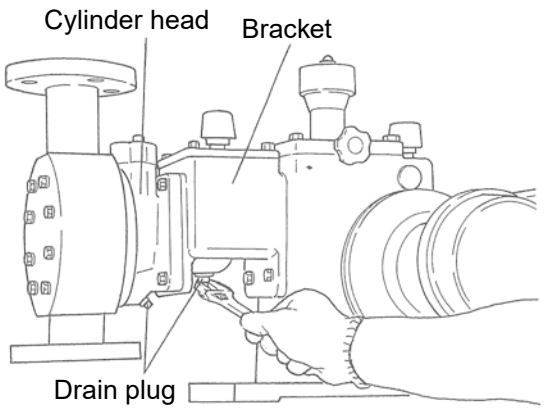

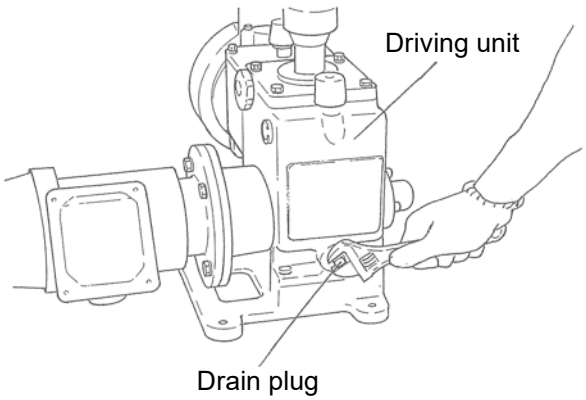

3. Remove the bracket cover and the air vent cover. Then use a wrench to remove the relief valve (Oil feed plug for the AXA-DL(WL) 100 and AXB-DL(WL) 85•100•122) and the automatic air vent valve assembly. The relief nut (151) of the relief valve should not be loosened. Remove them as a unit.

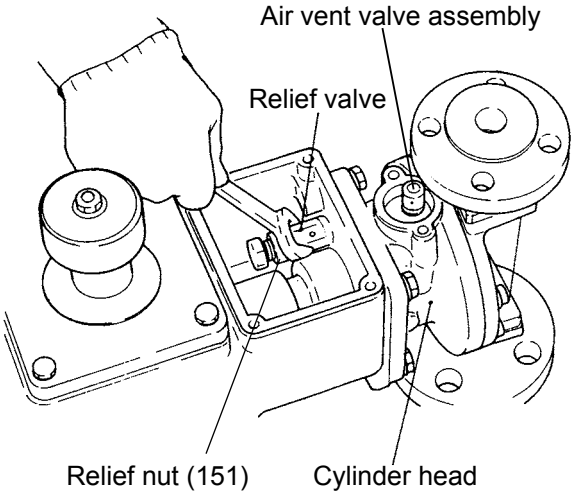

Name	Nominal wrench size
Relief valve (RV-1AM)	17
Relief valve (RV-2AM)	24
Oil feed plug	17
Air vent valve assembly	13

AXA-100 and AXB-85•100•122

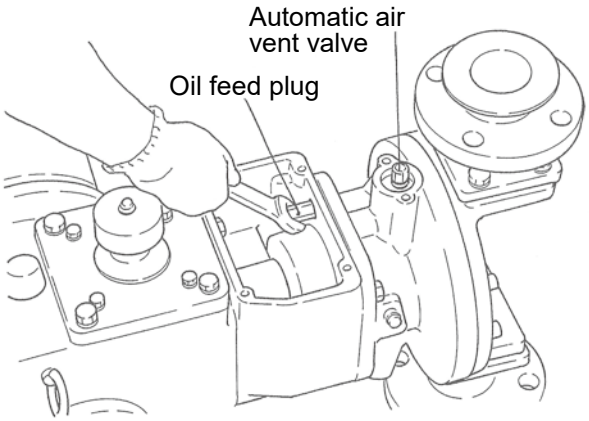

4. Flush the inside with new oil.
5. Apply sealing tape around the drain plugs and attach them to the bracket, cylinder head, and driving unit.
6. Set the stroke at 0%.
7. Slowly pour suitable oil into the bracket, taking care not to generate foam. Fill oil up to the mid-level of the oil gauge on the driving unit and leave it for five minutes (ten minutes for the AXA-100 & AXB-85•100•122). See the “Suitable oil brands” item. If oil level reduces refill the unit.
   Check the plug on the driving unit is replaced by the air breather. Otherwise oil cannot flow into the driving unit via the connecting hole. See Item 6 of “Before Installation”.

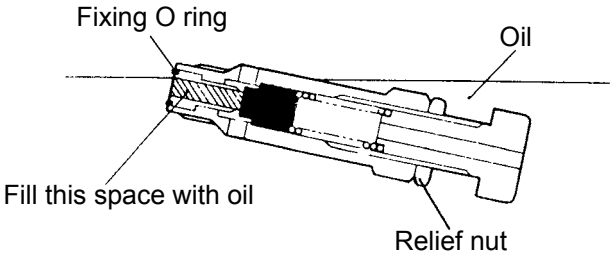

8. Prepare the relief valve (Oil feed plug for the AXA-100 and AXB-85•100•122).
   Fit O ring to the relief valve and then fill the top-end space of the relief valve with oil. Then tighten the relief valve with a wrench until it reaches the innermost.
9. Attach O ring to the automatic air vent valve assembly. And then tighten the assy with a wrench until it reaches the innermost.
10. All the steps for oil change have now been completed, however, the air elimination operation is needed to expel the air from the automatic air vent valve assembly. For the air elimination operation, see the “Adjustment of hydraulic oil level" on page 35.

■ Inspection and replacement of the insert chamber liquid (Double diaphragm type)

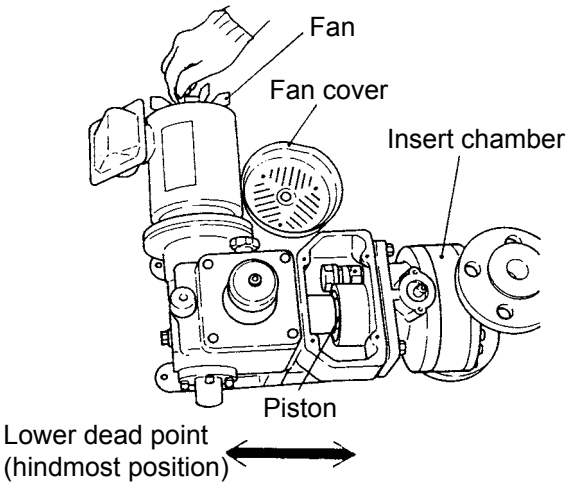

Generally, the enclosed liquid in the insert chamber needs not be checked or changed. In case of changing the enclosed liquid, take the following steps without removing the pump head and the first diaphragm.

⚠WARNING
Be sure to turn off the main power so that the pump and related devices are stopped. If the motor is turned on the motor fan starts to rotate and result in serious injury.

1. First, stop the pump. Release the pressure from the pump head and set the stroke to 100%.
2. Detach the drain plug from the bracket and release oil.
3. Remove the motor fan cover and turn the fan by hand, or remove the motor and rotate the coupling by hand to bring the piston to lower dead centre (its hindmost position).
4. Remove upper & lower drain plugs on the insert chamber and release the enclosed liquid.
5. Apply sealing tape to the lower drain plug and screw it into the insert chamber.
6. Pour the liquid into the upper drain plug hole to fill the insert chamber. Wait five minutes to see if liquid level reduces or not. Replenish the liquid as necessary.
7. Apply sealing tape to the upper drain plug and screw it into the insert chamber.
8. Attach the drain plug to the bracket and pour a specified amount of oil into the bracket. See “Required oil level" on page 23.
9. Run the pump for five minutes.

For the replacement of the piston O ring & the diaphragm, or the dismantlement of the pump head, follow the instructions in “10. Disassembly & Assembly”.

9. Troubleshooting

Cause \ Problem	Motor does not run.	Discharge rate is too low or too high.	Dis-charge rate is un-stable.	Exces-sive motor amper-age	Liquid is not trans-ferred.	Dis-charge pressure is low.	Liquid leak	Abnormal vibrations and/or noise	Oil leak	High tempera-ture of driving unit	Remedy
Motor is out of order.	○			○							Replace as necessary
Breakage or improper connection.	○			○							Connect or replace wire.
Blowout	○			○							Determine and solve the root cause.
Voltage is too low.	○			○							Determine and solve the root cause.
Insufficient NPSH (due to cavitation)		○	○		○			○			Review suction requirements.
Worn valve seat		○	○		○	○					Replace as necessary.
Foreign matter block the valve.		○	○		○						Disassembly and cleaning.
Suction piping (the strainer) is blocked.		○	○		○						Disassembly and cleaning.
The measure of stroke length is upset.		○									Readjustment.
Overfeeding due to insufficient differential pressure.		○	○								Increase the differential pressure.
Stroke rate fluctuates.			○								Examine power source, motor and gear reducer.
Overload (excessive discharge pressure)				○						○	Examine discharge piping system.
Improper power supply				○							Examine power source.
The air is entrained from suction side piping.		○	○		○						Inspect and adjust piping.
Use of unspecified liquid		○	○		○			○			Review pump specifications.
Pressure gauge is out of order.						○					Replace as necessary.
Pressure gauge is blocked.						○					Clean as necessary.
Leak from the safety valve.		○	○		○	○					Reset the set pressure of safety valve.
Improper lubricating oil in driving unit.				○				○		○	Check oil level, oil type and cleanliness.
Defective Oil seal/O ring									○		Replace as necessary.
Defective valve gasket or fitting gasket		○					○				Replace as necessary.
Improper level of enclosed liquid (only for WL models)		○		○			○				Check and refill the liquid.
Diaphragm deformation.		○			○						Replace as necessary.
Oil leaks from the relief valve.		○	○		○						Repair or replace as necessary.
Malfunction of oil compensator valve assy.		○	○		○	○					Repair or replace as necessary.
The air is not fully eliminated from hydraulic unit.		○	○								Eliminate the air.
Malfunction of automatic air vent mechanism.		○	○								Disassembly, cleaning, or replacement
Improper tightening torque of pump head mounting bolts.		○	○				○		○		Retighten the bolts by specified torque.

10. Disassembly & Assembly

Refer to the "12. Exploded View" for dismantlement, assembly, and adjustment. Do not dismantle the driving unit because the driving unit is already adjusted in the manufacturing phase.

⚠ CAUTION
Some chemicals are harmful to eyes or skins. Always use protective clothing such as protective goggles and gloves during dismantlement and assembly.

■ Disassembly

1. Drain the liquid out of the suction and discharge-side pipes. Close valves and then remove the pipes from pump, taking care not to spill liquid.
2. Remove suction & discharge-side flanges in order to remove the pump head valves. If unusual scratches or abrasions are detected on any parts, replace them. Pay attention to harmful liquid. Harmful liquid can spill out of the pump chamber and the valve set, causing injury or damage to component parts.

<table>
<tr><th>Pump head size</th><th>SUS type</th><th>PVC type</th><th>TC type</th></tr>
<tr><td>D3 • D15</td><td>Detach valve caps.</td><td rowspan="2">Remove the Inlet, Outlet, and Valve set by hand or belt wrench.</td><td rowspan="2">Remove the mounting bolts on the retaining flange.</td></tr>
<tr><td>D35 • D90</td><td rowspan="3">Remove the mounting bolts on the retaining flange.</td></tr>
<tr><td>D170 • D250</td><td>Screw two M6 bolts into the Valve retainer and loosen it by using a bar. And then remove the Inlet and Outlet.</td><td rowspan="2">——</td></tr>
<tr><td>D500</td><td>Remove the Inlet & Outlet by hand or belt wrench.</td></tr>
</table>

<SUS type> D3•D15

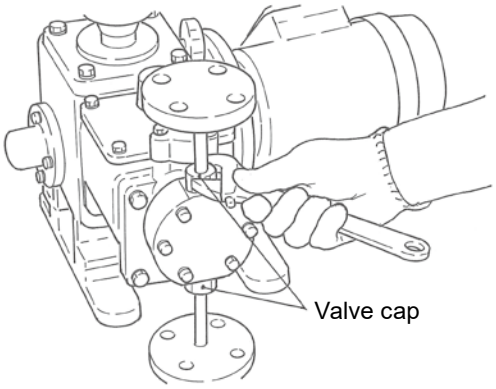

<SUS type> D35•D500

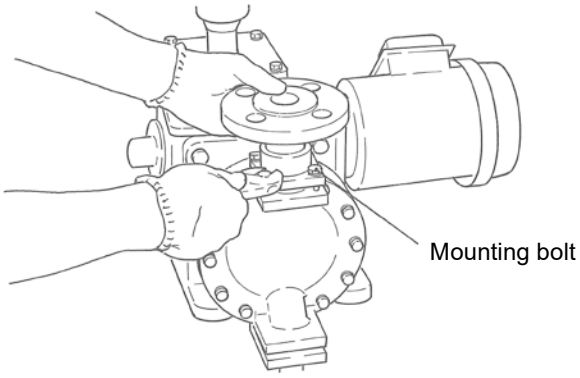

<PVC type> D3•D15•D35•D90•D500

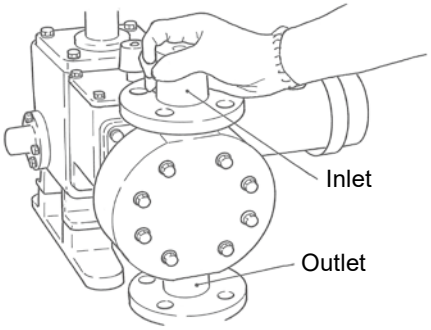

<PVC type> D170•D250

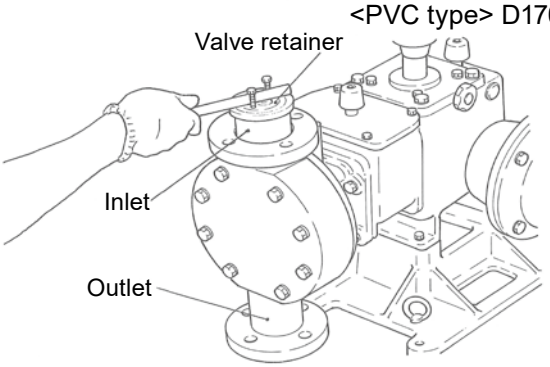

3. Place a container under the drain plug for oil collection. Then remove the drain plugs on the cylinder head & bracket to drain oil.

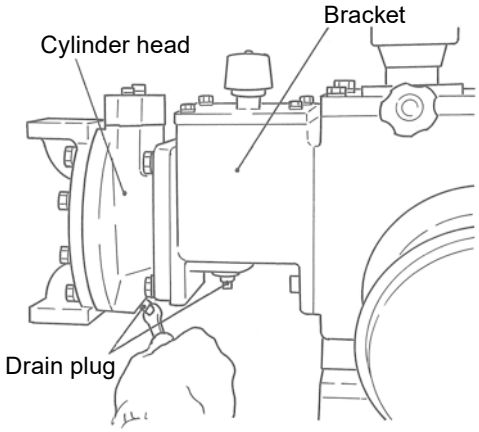

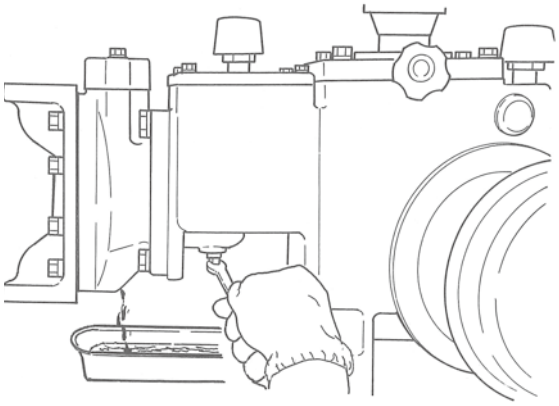

*4. (This item should be applied to the double diaphragm type <WL type> only.)
Place a container under the insert chamber to collect liquid. Remove the upper & lower drain plugs on the insert chamber and drain the enclosed liquid.

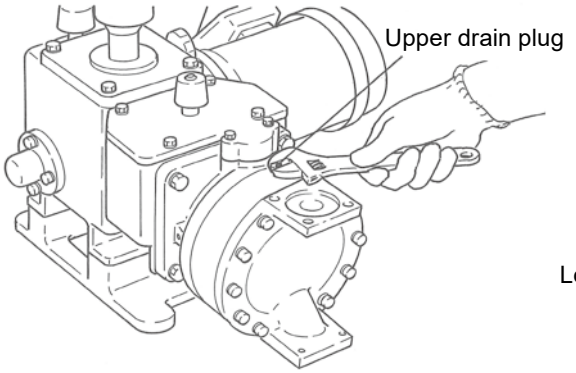

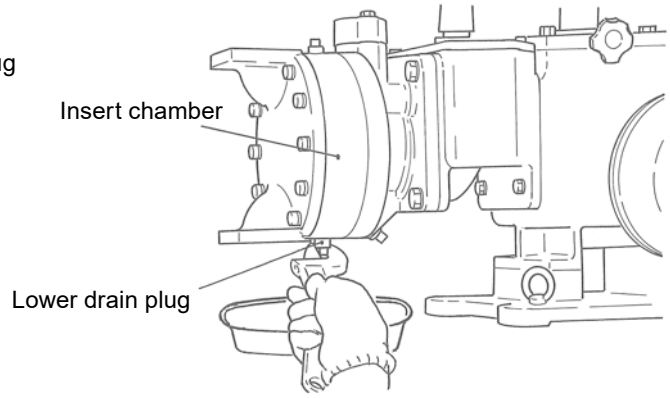

● Instructions marked with * are for WL models only but not for DL models.

5. Loosen the mounting bolts (16) on the pump head and detach the pump head (1).

● Take care so as not to damage the diaphragm sealing surface on the pump head.

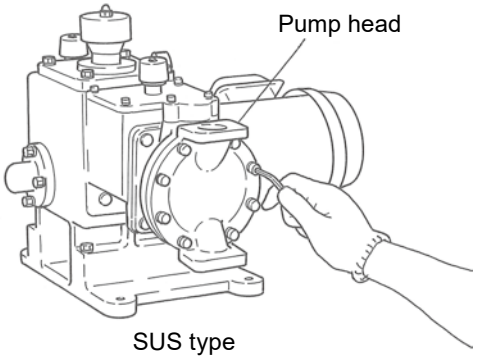

For the SUS single pump head types, the Front plate (25) comes off when the pump head is removed.
For all the double pump head types, the pump head spacer (26) comes off when the pump head is removed.
Try not to drop these parts on the floor.

6. Remove the diaphragm (the front diaphragm of the WL models) (111). Be careful not to damage it.
   If scratches or other abnormalities are found on the diaphragm, replace with new one.

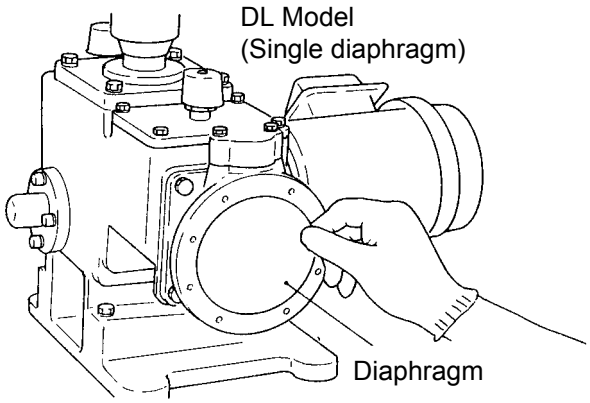

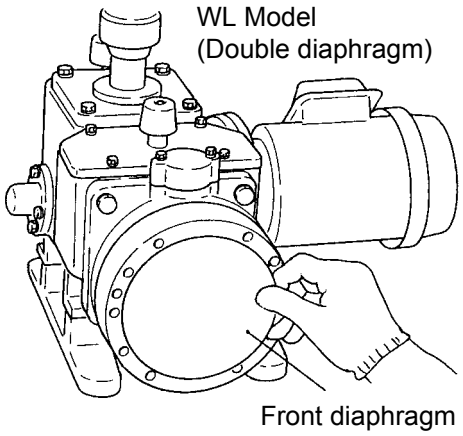

*7. For WL model, loosen the mounting bolts (115) and remove the insert chamber (114) after removing the front diaphragm. The Front plate (25) comes off when the insert chamber is removed. Try not to drop it on the floor.

*8. Remove the rear diaphragm (111). Be careful not to damage it.

- Instructions marked with * are for WL models only but not for DL models.

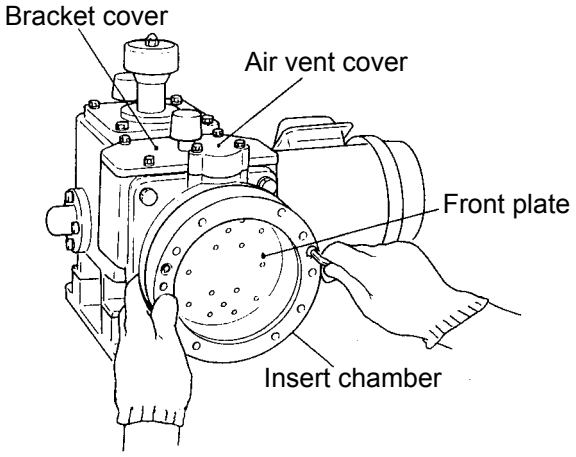

9. Remove the bracket cover (162) and the air vent cover (134). Use a wrench to remove the relief valve (the Oil feed plug for the AXA-100 and AXB-85•100•122) and the automatic air vent valve assembly.

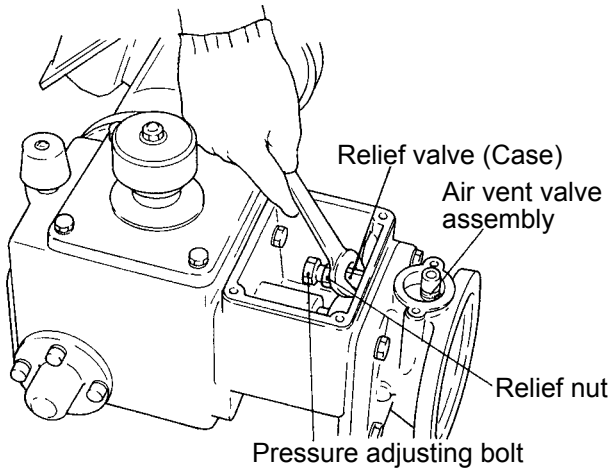

For the removal of the relief valve, hold and loosen the Case (144) with a spanner and detach it as a unit. Do not loosen the relief nut and pressure adjusting bolt (the cap for AXK-52•68 and AXA-42•52•68•85).

For the nominal wrench size, see Item 3 of “Oil change procedure” on page 23.

AXA-100 & AXB-85•100•122

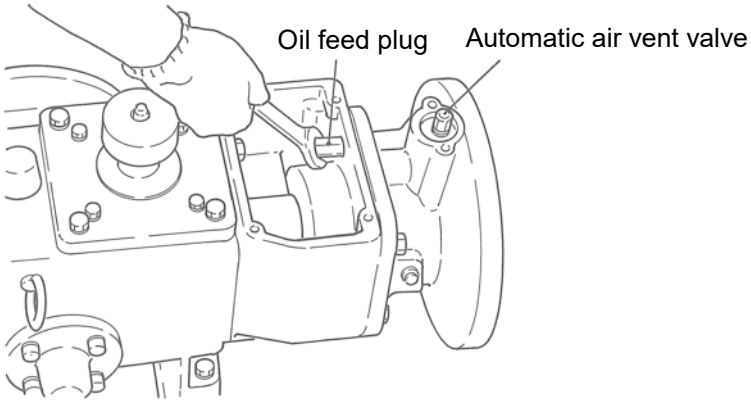

10. Remove the cylinder head (101). Do not remove the oil compensator valve from the cylinder head.

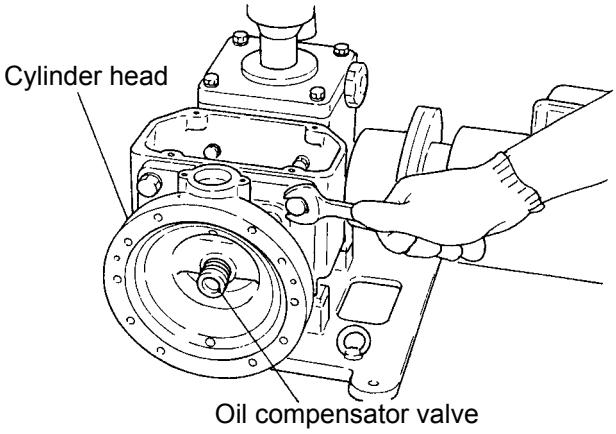

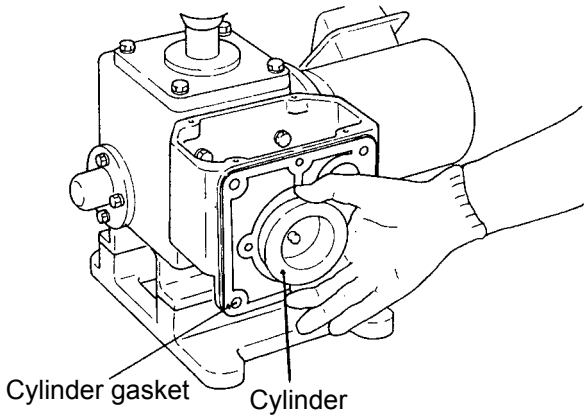

11. Remove the cylinder and the cylinder gasket. Pull out the cylinder while rotating it. Take care not to scratch the sliding surface of the piston.

12. ***For the AXJ-42, AXK-42•52•68, AXA-52•68•85•100 and AXB-68•85•100•122***
Remove the piston (117).
Check and replace the piston O ring if it is damaged or worn out.

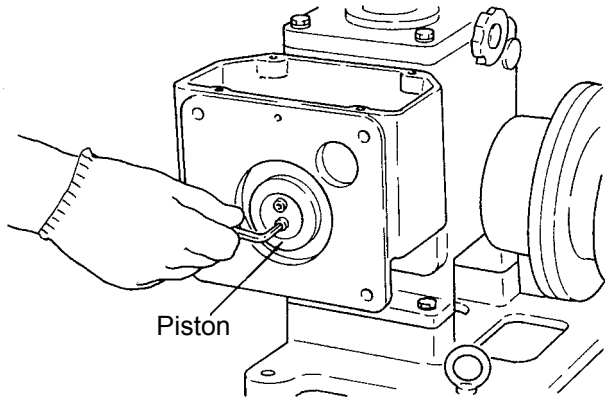

■ Assembly

Assembly can be done in reverse procedure to disassembly.

1. Before assembly, clean each part to remove oil and foreign matter.
2. Apply sealing tape to the drain plugs and mount them to the bracket and cylinder head.
3. ***For the AXJ-42, AXK-42•52•68, AXA-52•68•85•100 and AXB-68•85•100•122***
   Fit the piston O ring (118) to the piston (117) and the crosshead O ring (120) to the crosshead (119). Then mount the piston (117) to the crosshead (119) and connect them by tightening the hexagon socket head bolts (121) fully so that it will not loosen.
4. Apply oil to the sliding surfaces of the piston (117) and the cylinder (126). And then place the cylinder (126) and the cylinder gasket (166) to the bracket (158).
5. Place the cylinder-sealing O ring (127) in the cylinder insertion hole on the cylinder head. Mount the cylinder head with the oil compensator valve assembly on it to the bracket. Use the mounting bolts of the strength classification 8T (JIS B1051: “8” is marked on the bolt head) to fix the cylinder head. Push the slide valve (139) of the oil compensator valve assembly to see if it slides smoothly. Rotate the slide valve so that one of holes on surface looks upward.
6. Fit the rear plate (110) into the groove on the cylinder head. One of the outermost holes on the rear plate should come to the top centre. See below.

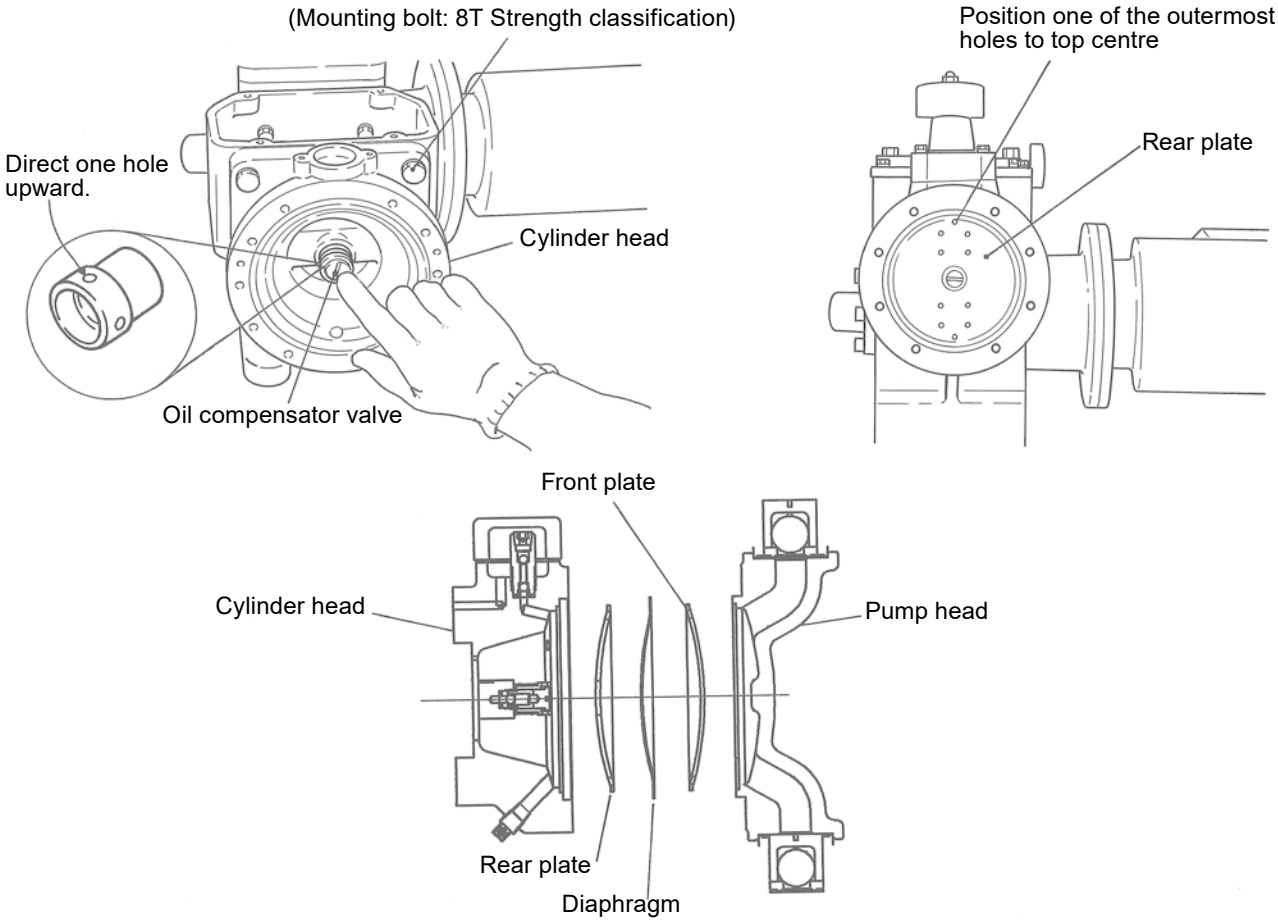

7. Fit the diaphragm (The rear diaphragm for the double diaphragm type) into the groove on the cylinder head.

*8. Apply sealing tape to the lower drain plug (171) and mount it to the insert chamber (114). Secure the drain plug tightly for the prevention of leakage.

● Instructions marked with * are for WL models only but not for DL models.

*9. Mount the insert chamber to the cylinder head.

① Tighten the insert chamber mounting bolts (115) evenly.

② See the following diagram for mounting the rear plate and diaphragms. Mount the rear plate with one of the outermost holes at top centre.

③ If a diaphragm is damaged or deformed, replace it with new one.

④ If the hemispherical surface of a diaphragm has creases or unevenness, smooth them out with the hands or dip the diaphragm in hot water (70-80℃) for 30 seconds and then cool it down in cold water to reshape the spherical surface. Using a diaphragm with creases or unevenness, adequate level of the enclosed liquid can not be filled to the insert chamber and an accurate discharge cannot be obtained.

*10. Fit the first diaphragm into the insert chamber. Refer to ②, ③, and ④ on item 9.

WL type

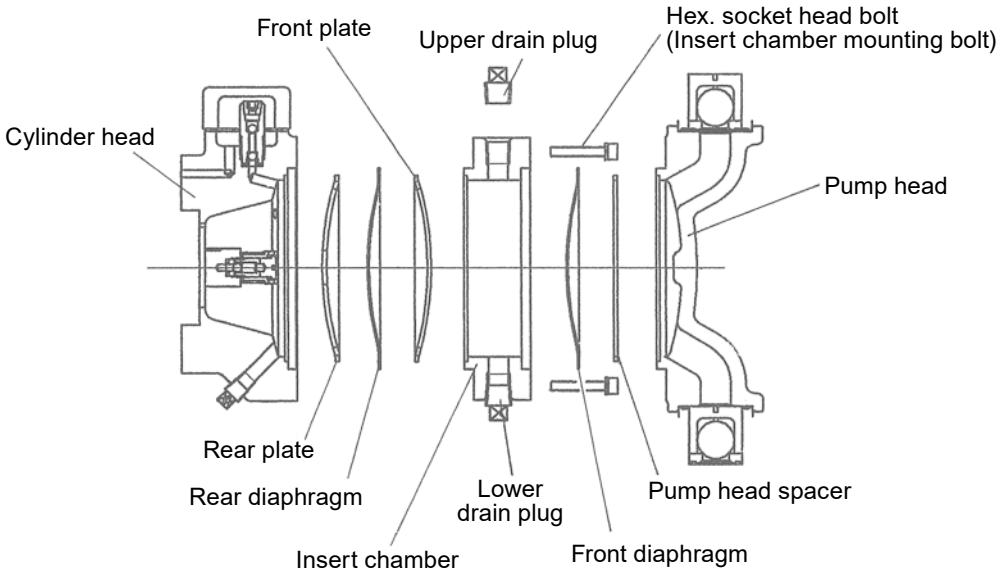

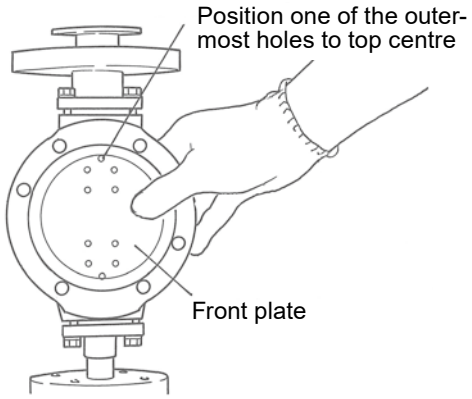

11. Fit the Front plate (25) (or the Pump head spacer (26) for WL type) into the groove on the SUS pump head. See the left diagram for mounting direction.

- Make sure the one of the outermost holes is at the top.

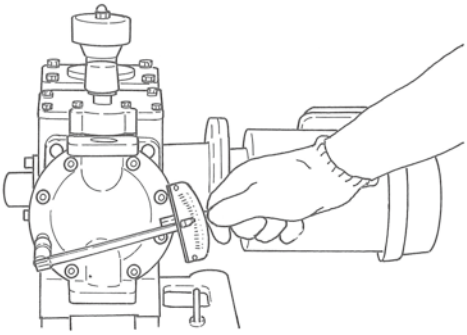

12. Secure the pump head to the cylinder head (or to the insert chamber for the WL type) by tightening the mounting bolts (16) evenly. The tightening procedure is as follows:

① First, tighten the bolts lightly. Use a hexagon rod wrench for the SUS type or a wrench for the PVC type.

② Then, retighten them by the following torque in the table. Retightening should be done little by little to the specified tightening torque.

NOTE: The bolts should be tightened diagonally in the numerical order shown below.

NOTE: Excessive tightening will damage the diaphragm or cause other problems.

Order for tightening pump head

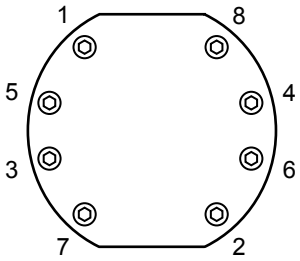

Tightening torque (common for DL and WL)
Unit : N•m{kgf•cm}

Pump head size \ Pump type	S6•VS•VC•TC
D3 • D15	2.5 {25}
D35 • D90	7.5 {75}
D170 • D250	15.5 {155}
D500	23.5 {240}

*13. Gradually pour the enclosed liquid via the upper drain plug hole until the insert chamber (114) is completely filled. Leave it for about 5 minutes and check if liquid level reduces or not. If it reduces, replenish the liquid. In the last place apply seal tape to the drain plug (171) and tighten it to close the plug hole.

Enclosed liquid level (Reference value) (Unit: mL)

Pump head type \ Pump head size	D3	D15	D35	D90	D170	D250	D500
WL	36	88	220	470	690	1050	1670

14. Attach the pump head valves and inlet & outlet flanges to the pump head, paying attention to the following points:
    - Be sure to mount the valve seat and valve guide in the correct order and direction. See the exploded view on page 38 and 39 for installation of the pump head valves.
    - For the SUS or TC pump head with the Retaining flanges, tighten the mounting bolts evenly on the Retaining flanges to secure the Inlet and the outlet.
    - For the VS and VC types, tighten the Inlet and Outlet by hand or a belt wrench until they reach the A side. For the D170 and D250 PVC pump head types, screw two M6 bolts into the Valve retainer (22) and use a bar to tighten it.

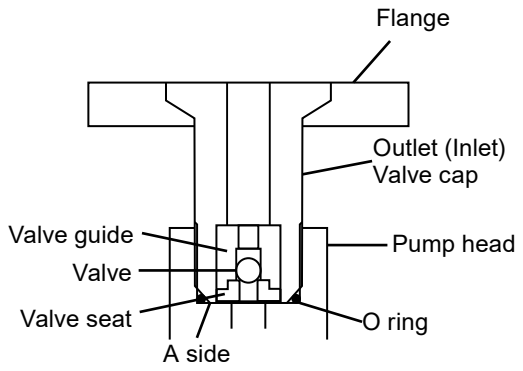

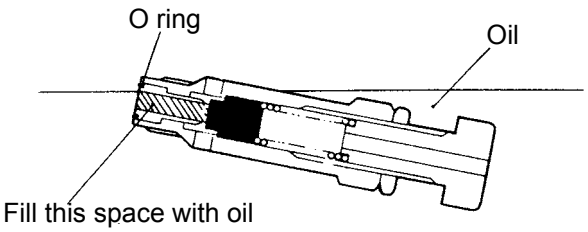

15. Set the stroke length to 0%.
16. Ensure that the relief valve (or oil feed plug) and the automatic air vent valve assembly are removed from the cylinder head. Refer to page 29 for instructions on removing the relief valve.
17. Slowly pour suitable oil into the hydraulic unit, taking care not to generate foam. Fill oil up to the mid-level of the oil gauge on the driving unit and leave it for five minutes (ten minutes for the AXA-100 & AXB-85•100•122). If liquid level reduces after five (or ten) minutes, replenish it. For usable oil brands, see page 23 “Required oil level”. Check the plug on the driving unit is replaced by the air breather. Otherwise oil cannot flow into the driving unit via the connecting hole. See “6. Before Installation".
18. Fit O ring to the relief valve. Install the relief valve to the cylinder head. (For the AXA-100 & AXB-85•100•122, install the oil feed valve to the cylinder head). First, immerse the relief valve into oil to fill its top-end space. Then use a wrench to tighten the relief valve (or oil feed plug). See page 24 for "Nominal wrench size".
19. Fit O ring to the automatic air vent valve assembly and then tighten the valve until it reaches the innermost. Use a wrench of size 13.

■ Adjustment of hydraulic oil level

After completing assembling, run the pump to eliminate the residual air out of the hydraulic chamber through the automatic air vent valve assembly so that oil can be at an adequate level. If the air is not eliminated completely, the metering precision may significantly reduce. Note that the air elimination operation should be done under no-load condition.

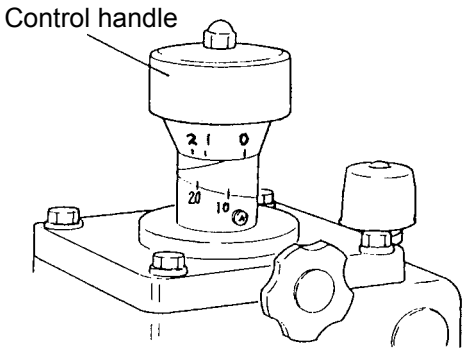

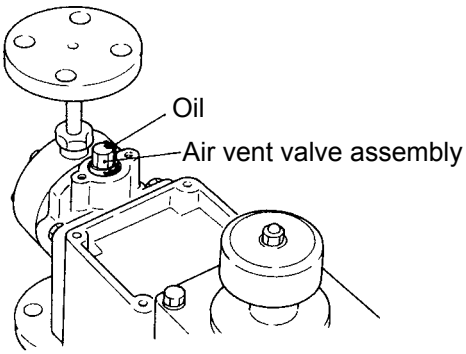

1. Set the stroke length to 100% by rotating the control handle. Run the pump for 2-3 minutes.
   Turn the control handle and set it at 100%.
2. Decrease the stroke length down to 30% and run the pump for 2-3 minutes.
3. Return the stroke length to 100% and run the pump for 2-3 minutes.
4. Repeat this air elimination operation more than three times.
5. After the air elimination operation, confirm that oil is discharged from the automatic air vent assembly (See the left diagram.).
   If the oil level decreases after the air elimination, add oil up to the middle of the oil gauge of the driving unit.
6. Attach the bracket cover and the air vent cover.
7. Make no-load running with 100% stroke length for 10 minutes.
8. Connect the pump in the piping system and start operation. Be sure to open all the related valves on both discharge & suction side pipes before operation. Do not narrow or close any valve during operation.

■ Handling of relief valve

Never loosen the relief nut (151) because the relief valve has already been set in accordance with the specified discharge pressure. When removing the relief valve for oil change or inspection, always remove it as a unit.

- Do not use the pump at any discharge pressure than specified one.
- Contact us if any operating condition is changed. If discharge pressure increases, the comprehensive check is requested for the pressure resistance of wet end, motor power, and the load to piston end.

■ Motor mounting

After the couplings are fitted to the pump shaft and the motor shaft, check that the dimension A and B are equal by the depth gauge. In the last place tighten the set screws to fix the couplings.
Note that dimension A is from the flange edge to the convex on the coupling rubber.

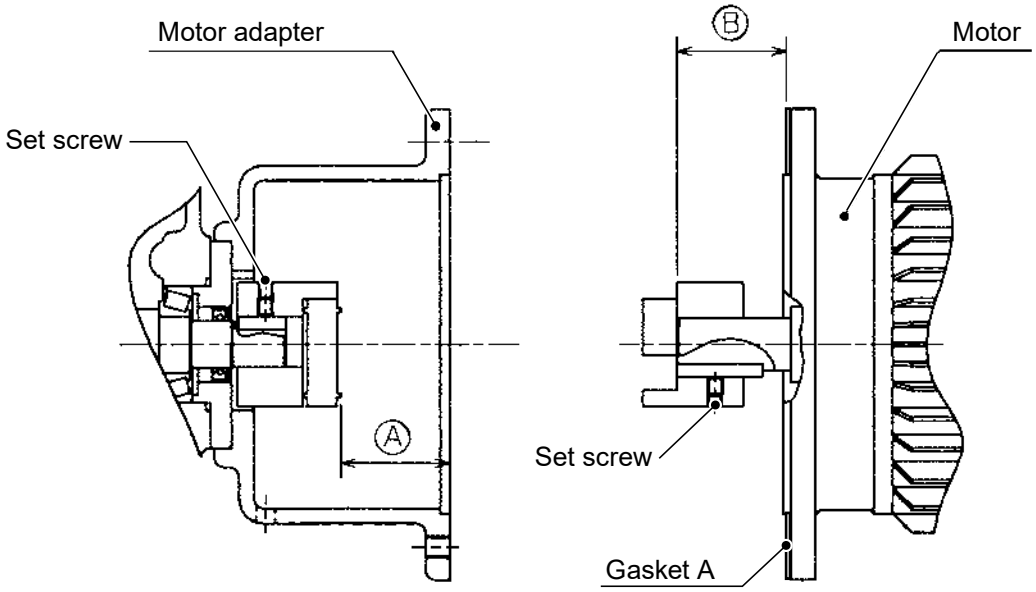

11. Normal Consumable Parts

Always stock the appropriate number of normal consumable parts when the pump is used for a long period of continuous operation. Contact us with the following information when placing an parts order.

① Names of parts and parts number. Refer to "12. Exploded View".

② Pump model code and manufacturing number. See nameplate on the product.

③ Drawing number (If you have our approval drawing.)

No.	Name	Expected life (RV)	DL•WL3S6	DL•WL15S6	DL•WL35S6	DL•WL90S6	DL•WL170S6	DL•WL250S6	DL•WL500S6
			Quantity						
2	Valve seat	1 year	2						
3	Valve		2						
4	Valve guide		2		2 sets				
5	Valve gasket		6		2				
24	Fitting gasket		——		2				
111	Diaphragm		1 (2 for WL) type						

No.	Name	Expected life (RV)	DL•WL3VS/VC	DL•WL15VS/VC	DL•WL35VS/VC	DL•WL90VS/VC	DL•WL170VS/VC	DL•WL250VS/VC	DL•WL500VS/VC
			Quantity						
2	Valve seat	1 year	2						
3	Valve								
4	Valve guide								
12	O ring								
21	O ring		——				2		
111	Diaphragm		1 (2 for WL) type						

O ring size and piston diameters (No.118)

Piston diameter	Expected Life (RV)	O ring size
07	1 year	JIS B 2401 P4
11		JIS B 2401 P8
15		JIS B 2401 P11
22		JIS B 2401 P18
30		JIS B 2401 P24
42		JIS B 2401 P36
52		JIS B 2401 P46
68		JIS B 2401 P58
85		JIS B 2401 P75
100		JIS B 2401 P90
122		JIS B 2401 P122

NOTE: The lives of spare parts depend on the liquid pressure, liquid temperature, liquid properties. The expected life shown above is calculated on the continuous operation with clean water at normal temperature.

12. Exploded View

■ Pump head

PVC type

- AXJ-07, 11, 15, 22, 30, 42
- AXK-30, 42, 52, 68
- AXA-42, 52
- AXB-52
  (D3, 15, 35 & 90 head size)

- AXA-68, 85, 100
- AXB-68, 85
  (D170 & 250 head size)

- AXB-100, 122
  (D500 head size)

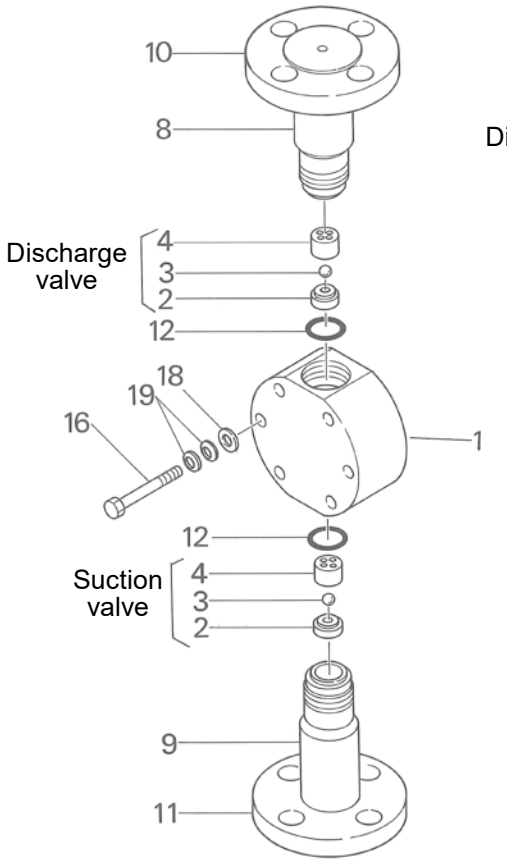

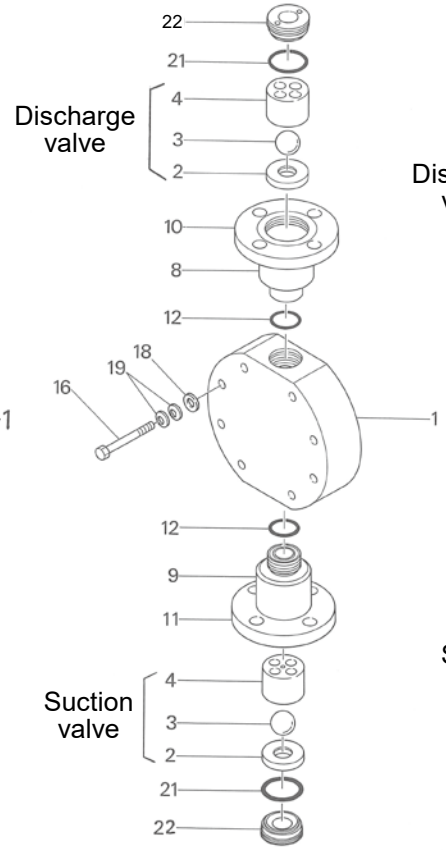

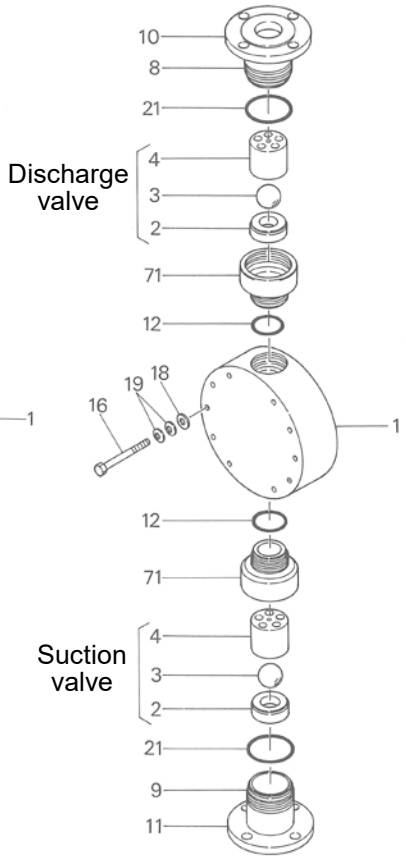

No.	Name	Quantity	No.	Name	Quantity
1	Pump head	1	12	O ring	2
2	Valve seat	2	16	Hexagon head bolt	NOTE 1
3	Valve	2	18	Plate washer	NOTE 1
4	Valve guide	2	19	Coned disk spring	NOTE 2
8	Outlet	1	21	O ring	2
9	Inlet	1	22	Valve retainer	2
10	Flange	1	71	Valve case	2
11	Flange	1			

NOTE 1: The quantity is 6 bolts for the D3 (8 bolts for the D15/35/170, 10 bolts for the D90/250/500).
NOTE 2: The quantity is 12 washers for the D3 (16 washers for D15/35/170, 20 washers for the D90/250/500).

SUS type

- AXJ-07, 11, 15, 22, 30
  (D3 & 15 head size)

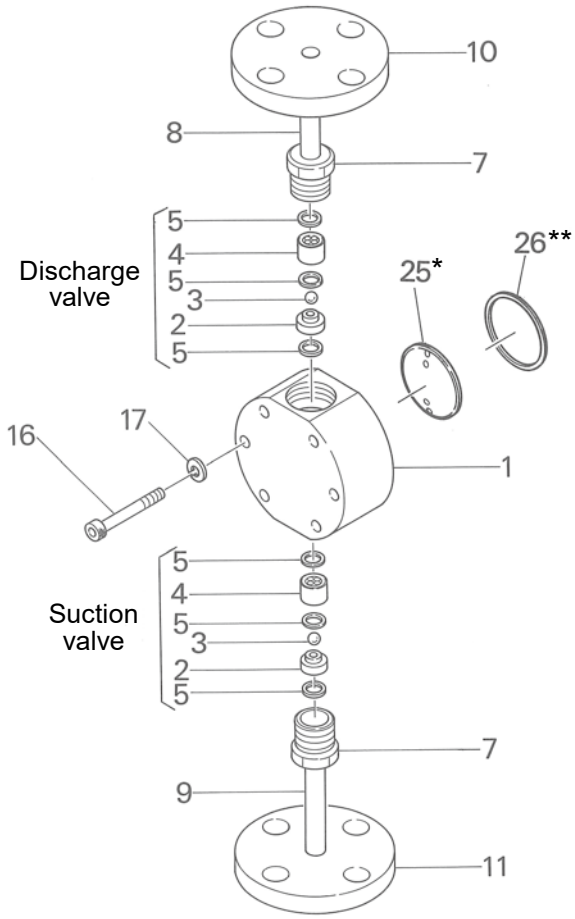

- AXJ-42
- AXK-30, 42, 52, 68
- AXA-42, 52, 68, 85, 100
- AXB-52, 68, 85, 100, 122
  (D35, 90, 170, 250 & 500 head size)

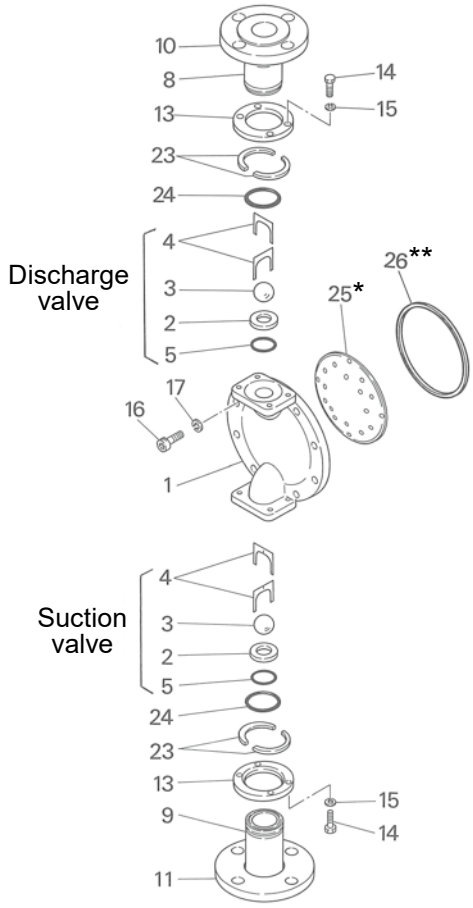

Use 25* for DL type. Use 26** for WL type.

No.	Name	Quantity	No.	Name	Quantity
1	Pump head	1	13	Retaining flange	2
2	Valve seat	2	14	Hexagon bolt	8
3	Valve	2	15	Spring washer	8
4	Valve guide	2 sets	16	Hexagon socket head bolt	NOTE
5	Valve gasket	2 (6 for the D3/15)	17	Spring washer	NOTE
7	Valve cap	2	23	Split ring	4
8	Outlet	1	24	Fitting gasket	2
9	Inlet	1	25	Front plate	1
10	Flange	1	26	Pump head spacer	1
11	Flange	1			

NOTE: The quantity is 6 for the D3 (8 for the D15/35/170, 10 for the D90/250/500).

■ Hydraulic unit

The unit is totally exploded in the diagram for easy comprehension, however, dismantlement is limited to the extent shown in the "8. Maintenance & Inspection" and "10. Disassembly & Assembly" sections.

- AXJ-07, 11, 15, 22, 30
- AXK-30
- AXA-42

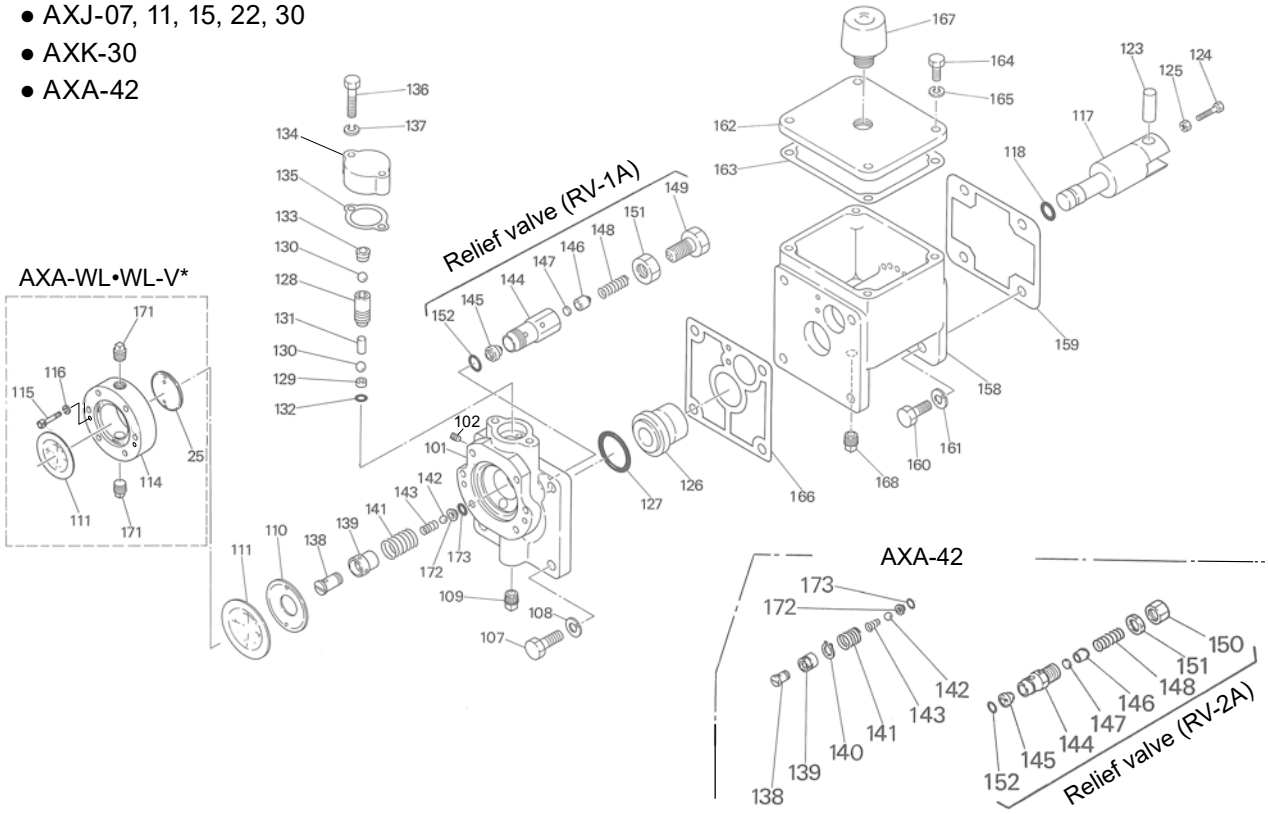

No.	Name	Quantity	No.	Name	Quantity	No.	Name	Quantity
25*1	Front plate	1	130	Air vent valve	2	149	Pressure control bolt	1
101	Cylinder head	1	131	Separate pin	1	150	Cap	1
102*2	Taper sink plug	1	132	O ring	1	151	Relief nut	1
107	Hexagon head bolt	4	133	Air vent plug	1	152	O ring	1
108	Spring washer	4	134	Air vent cover	1	158	Bracket	1
109	Drain plug	1	135	Air vent cover gasket	1	159	Case gasket	1
110	Rear plate	1	136	Hexagon head bolt	2	160	Hexagon head bolt	4
111	Diaphragm	1(2 for WL)	137	Spring washer	2	161	Spring washer	4
114*1	Insert chamber	1	138	Oil compensator valve assembly housing	1	162	Bracket cover	1
115*1	Hexagon socket head bolt	2				163	Cover gasket	1
116*1	Spring washer	2	139	Slide valve	1	164	Hexagon head bolt	4
117	Piston	1	140*3	Stop ring	1	165	Spring washer	4
118	O ring	1	141	Spring	1	166	Cylinder gasket	1
123	Crosshead pin	1	142	Check valve	1	167	Air breather	1
124	Hexagon head bolt	1	143	Check valve spring	1	168	Drain plug	1
125	Hexagon nut	1	144	Case	1	171*1	Drain plug	2
126	Cylinder	1	145	Valve seat	1	172	Valve seat	1
127	O ring	1	146	Valve base	1	173	O ring	1
128	Air vent assembly housing	1	147	Gasket	1			
129	Valve seat	1	148	Spring	1			

*1 Those parts marked with *1 are only for WL (double diaphragm) models.
*2 Taper sink plug (102) is only for the AXJ-22/30, AXK-30, and AXA-42.
*3 Stop ring (140) is only for the AXA-42.

Maintenance

The unit is totally exploded in the diagram for easy comprehension, however, dismantlement is limited to the extent shown in the "8. Maintenance & Inspection" and "10. Disassembly & Assembly" sections.

● AXJ-42 ● AXK-42, 52, 68 ●AXA-52, 68, 85 ●AXB-68

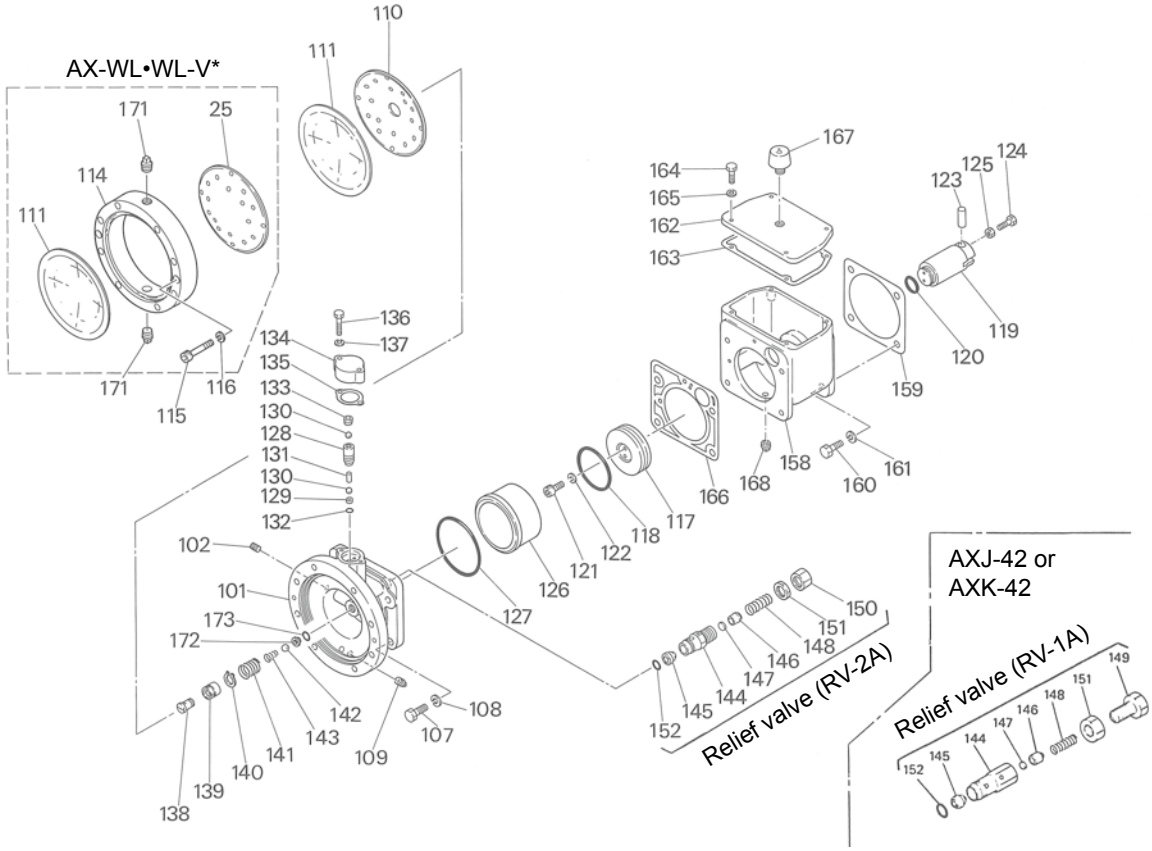

No.	Name	Quantity	No.	Name	Quantity	No.	Name	Quantity
25*	Front plate	1	127	O ring	1	147	Gasket	1
101	Cylinder head	1	128	Air vent assembly housing	1	148	Spring	1
102	Taper sink plug	(1)	129	Valve seat	1	149	Pressure control bolt	1
107	Hexagon head bolt	4	130	Air vent valve	2	150	Cap	1
108	Spring washer	4	131	Separate pin	1	151	Relief nut	1
109	Drain plug	1	132	O ring	1	152	O ring	1
110	Rear plate	1	133	Air vent plug	1	158	Bracket	1
111	Diaphragm	1(2 for WL)	134	Air vent cover	1	159	Case gasket	1
114*	Insert chamber	1	135	Air vent cover gasket	1	160	Hexagon head bolt	4
115*	Hexagon socket head bolt	2	136	Hexagon head bolt	2	161	Spring washer	4
116*	Spring washer	2	137	Spring washer	2	162	Bracket cover	1
117	Piston	1	138	Oil compensator valve assembly housing	1	163	Cover gasket	1
118	O ring	1				164	Hexagon head bolt	4
119	Crosshead	1	139	Slide valve	1	165	Spring washer	4
120	O ring	1	140	Stop ring	1	166	Cylinder gasket	1
121	Hexagon socket head bolt	2	141	Spring	1	167	Air breather	1
122	Spring washer	2	142	Check valve	1	168	Drain plug	1
123	Crosshead pin	1	143	Check valve spring	1	171*	Drain plug	2
124	Hexagon head bolt	1	144	Case	1	172	Valve seat	1
125	Hexagon nut	1	145	Valve seat	1	173	O ring	1
126	Cylinder	1	146	Valve base	1			

Those parts marked with * are only for WL (double diaphragm) models.

Maintenance

The unit is totally exploded in the diagram for easy comprehension, however, dismantlement is limited to the extent shown in the "8. Maintenance & Inspection" and "10. Disassembly & Assembly" sections.

● AXB-52

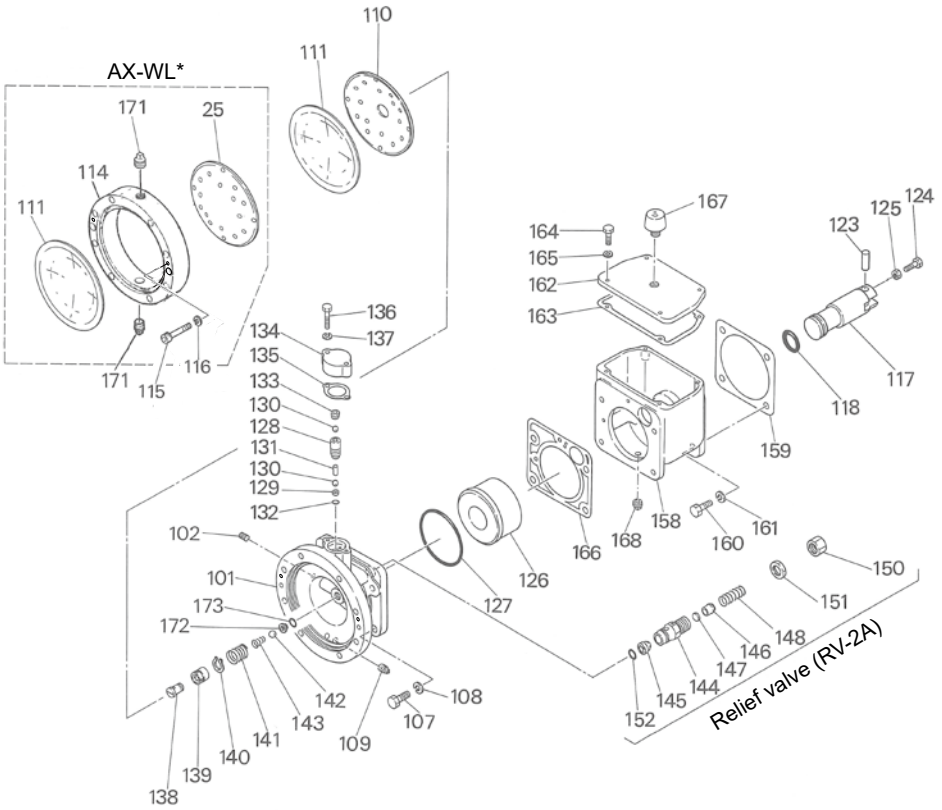

No.	Name	Quantity	No.	Name	Quantity	No.	Name	Quantity
25*	Front plate	1	129	Valve seat	1	147	Gasket	1
101	Cylinder head	1	130	Air vent valve	2	148	Spring	1
102	Taper sink plug	(1)	131	Separate pin	1	150	Cap	1
107	Hexagon head bolt	4	132	O ring	1	151	Relief nut	1
108	Spring washer	4	133	Air vent plug	1	152	O ring	1
109	Drain plug	1	134	Air vent cover	1	158	Bracket	1
110	Rear plate	1	135	Air vent cover gasket	1	159	Case gasket	1
111	Diaphragm	1(2 for WL)	136	Hexagon head bolt	2	160	Hexagon head bolt	4
114*	Insert chamber	1	137	Spring washer	2	161	Spring washer	4
115*	Hexagon socket head bolt	2	138	Oil compensator valve assembly housing	1	162	Bracket cover	1
116*	Spring washer	2				163	Cover gasket	1
117	Piston	1	139	Slide valve	1	164	Hexagon head bolt	4
118	O ring	1	140	Stop ring	1	165	Spring washer	4
123	Crosshead pin	1	141	Spring	1	166	Cylinder gasket	1
124	Hexagon head bolt	1	142	Check valve	1	167	Air breather	1
125	Hexagon nut	1	143	Check valve spring	1	168	Drain plug	1
126	Cylinder	1	144	Case	1	171*	Drain plug	2
127	O ring	1	145	Valve seat	1	172	Valve seat	1
128	Air vent assembly housing	1	146	Valve base	1	173	O ring	1

Those parts marked with * are only for WL (double diaphragm) models.

Maintenance

The unit is totally exploded in the diagram for easy comprehension, however, dismantlement is limited to the extent shown in the "8. Maintenance & Inspection" and "10. Disassembly & Assembly" sections.

- AXA-100
- AXB-85, 100, 122

AX-WL•WL-V*

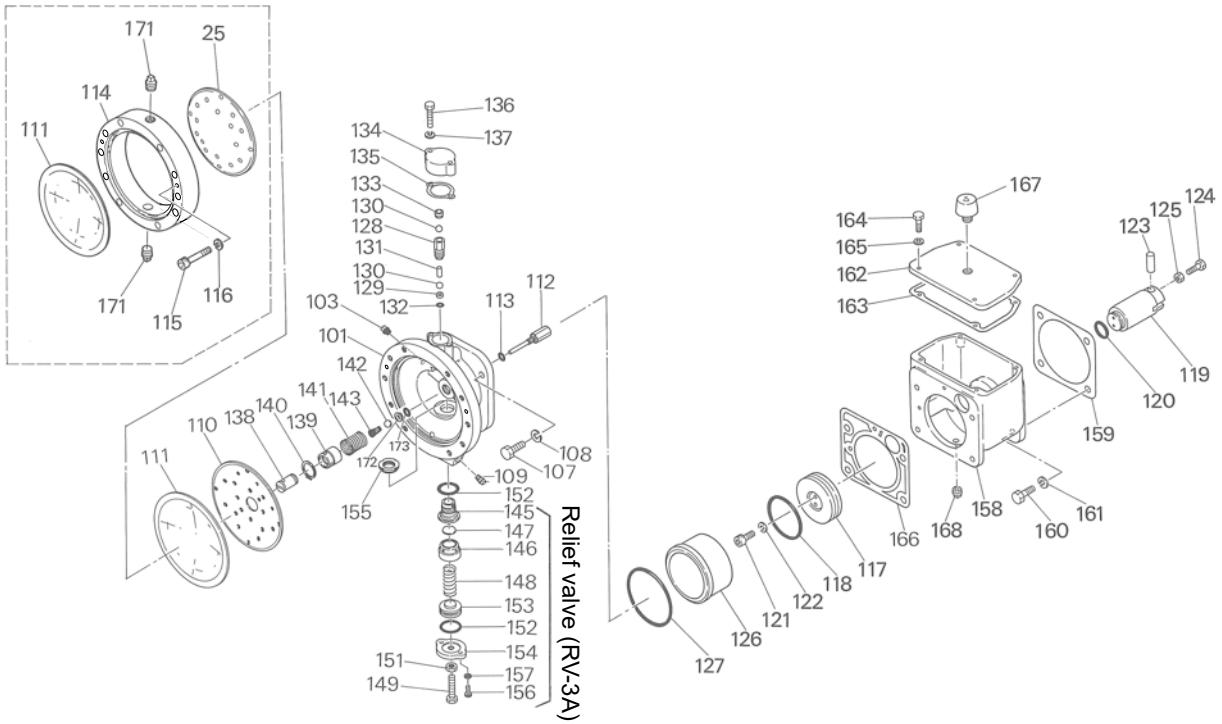

No.	Name	Quantity	No.	Name	Quantity	No.	Name	Quantity
25*¹	Front plate	1	127	O ring	1	151	Relief nut	1
101	Cylinder head	1	128	Air vent assembly housing	1	152	O ring	2
103	Plug	1	129	Valve seat	1	153	Spring seat	1
107	Hexagon head bolt	4*²	130	Air vent valve	2	154	Relief valve cover	1
108	Spring washer	4*²	131	Separate pin	1	155	Bearing nut	1
109	Drain plug	1	132	O ring	1	156	Hexagon head bolt	2
110	Rear plate	1	133	Air vent plug	1	157	Spring washer	2
111	Diaphragm	1(2 for WL)	134	Air vent cover	1	158	Bracket	1
112	Oil feed plug	1	135	Air vent cover gasket	1	159	Case gasket	1
113	O ring	1	136	Hexagon head bolt	2	160	Hexagon head bolt	4
114*¹	Insert chamber	1	137	Spring washer	2	161	Spring washer	4
115*¹	Hexagon socket head bolt	2	138	Oil compensator valve assembly housing	1	162	Bracket cover	1
116*¹	Spring washer	2				163	Cover gasket	1
117	Piston	1	139	Slide valve	1	164	Hexagon head bolt	4
118	O ring	1	140	Stop ring	1	165	Spring washer	4
119	Crosshead	1	141	Spring	1	166	Cylinder gasket	1
120	O ring	1	142	Check valve	1	167	Air breather	1
121	Hexagon socket head bolt	2	143	Check valve spring	1	168	Drain plug	1
122	Spring washer	2	145	Valve seat	1	171*¹	Drain plug	2
123	Crosshead pin	1	146	Valve base	1	172	Valve seat	1
124	Hexagon head bolt	1	147	Gasket	1	173	O ring	1
125	Hexagon nut	1	148	Spring	1			
126	Cylinder	1	149	Pressure control bolt	1			

*¹ Those parts marked with *¹ are only for WL (double diaphragm) models.
*² The quantity is 6 for the AXA-100/122.

https://www.iwakipumps.jp
IWAKI CO.,LTD. 6-6 Kanda-Sudacho 2-chome Chiyoda-ku Tokyo 101-8558 Japan
TEL: +81 3 3254 2935 FAX: +81 3 3252 8892

European Headquarter / IWAKI Europe GmbH
TEL: +49 2154 9254 0 FAX: +49 2154 9254 48
Germany / IWAKI Europe GmbH
TEL: +49 2154 9254 50 FAX: +49 2154 9254 55
The Netherlands / IWAKI Europe GmbH (Netherlands Branch)
TEL: +31 74 2420011 FAX: +49 2154 9254 48
Italy / IWAKI Europe GmbH (Italy Branch)
TEL: +39 0445 561219 FAX: +39 0445 569088
Spain / IWAKI Europe GmbH (Spain Branch)
TEL/FAX: +34 934 741 638
Poland / IWAKI Europe GmbH (East Europe Branch)
TEL: +48 12 347 0755 FAX: +48 12 347 0900
Denmark / IWAKI Nordic A/S
TEL: +45 48 242345
Finland / IWAKI Suomi Oy
TEL: +358 10 201 0490
Norway / IWAKI Norge AS
TEL: +47 23 38 49 00
Sweden / IWAKI Sverige AB
TEL: +46 8 511 72900
Belgium / IWAKI Belgium N.V.
TEL: +32 13 670200 FAX: +32 13 672030
France / IWAKI France S.A.
TEL: +33 1 69 63 33 70 FAX: +33 1 64 49 92 73
U.S.A. / IWAKI America Inc.
TEL: +1 508 429 1440 FAX: +1 508 429 1386
Brazil / IWAKI Do Brasil Comercio De Bombas Hidraulicas LTDA.
TEL/FAX: +55 19 3244 5900
China (Shanghai) / IWAKI Pumps (Shanghai) Co., Ltd.
TEL: +86 21 6272 7502 FAX: +86 21 6272 6929
China (Hong Kong) / IWAKI Pumps Co., Ltd.
TEL: +852 2607 1168 FAX: +852 2607 1000
China (Guangzhou) / GFTZ IWAKI Engineering & Trading Co., Ltd.
TEL: +86 20 84350603 FAX: +86 20 84359181
China (Shenzhen) / IWAKI Pumps (Shenzhen) Co., Ltd.
TEL: +86 0755 8656 3696
Singapore / IWAKI Singapore Pte Ltd.
TEL: +65 6316 2028 FAX: +65 6316 3221
Indonesia / IWAKI Singapore Pte Ltd. (Indonesia Office)
TEL: +62 21 6906606 FAX: +62 21 6906612
Malaysia / IWAKIm SDN. BHD.
TEL: +60 3 7803 8807 FAX: +60 3 7803 4800
Korea / IWAKI Korea Co., Ltd.
TEL: +82 2 6238 4800 FAX: +82 2 6238 4801
Taiwan / IWAKI Pumps Taiwan Co., Ltd.
TEL: +886 2 8227 6900 FAX: +886 2 8227 6818
Thailand / IWAKI (Thailand) Co., Ltd.
TEL: +66 2 322 2471 FAX: +66 2 322 2477
Australia / IWAKI Pumps Australia Pty Ltd.
TEL: +61 2 9899 2411 FAX: +61 2 9899 2421

T326-12 '26/07