Iwaki
Electromagnetic Metering Pump

EWP-R

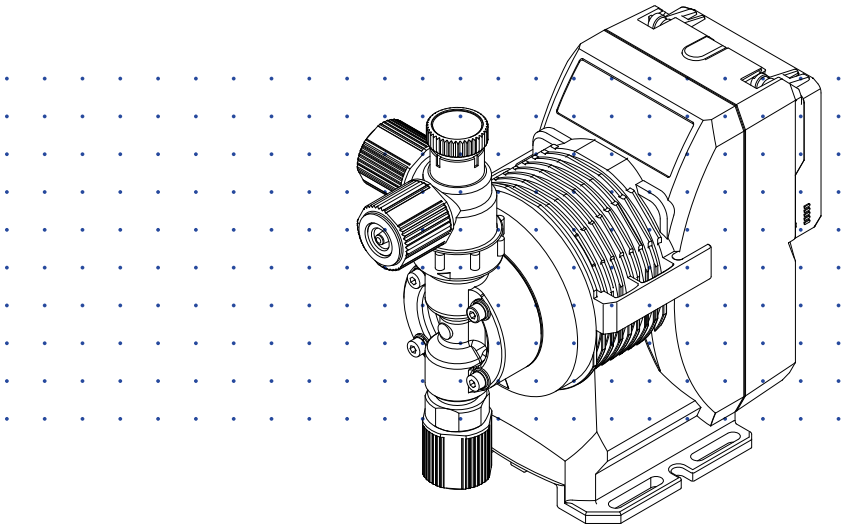

Instruction manual

Thank you for choosing our product.

⚠ Please read through this instruction manual before use.

This instruction manual describes important precautions and instructions for the product. Always keep it on hand for quick reference.

© 2024 IWAKI CO., LTD.

Order confirmation

Open the package and check that the product conforms to your order. If any problem or inconsistency is found, immediately contact your distributor.

a. Check if the delivery is correct

Check the nameplate to see if the information such as model codes, discharge capacity and discharge pressure are as ordered.

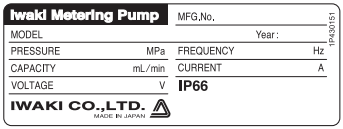

Asia-Australia

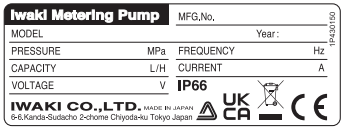

Europe

b. Check accessories are complete

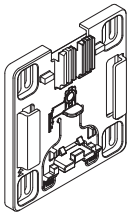

Detachable pump base (1)



Baseplate (2)
(SH type)



3mm or 4mm hex wrench
(The hex wrench may not be included, depending on the region.)

c. Check if the delivery is damaged or deformed

Check for transit damage and loose bolts.

Contents

Order confirmation **2**

Safety instructions *8*

WARNING **9**
CAUTION **10**

Precautions for use **12**

Overview *14*

Introduction **14**
Pump structure & Operating principle 14
Features 15
Part names **16**
Pump 16
Operational panel 17
■ Display 17
■ Basic displays & Pump states 18
Identification codes **20**
Pump 20
Operational functions **22**
Manual mode 22
EXT mode 22
■ ANA.P (analog preset) control 22
■ ANA.V (analog variable) control 23
■ PLS.V (pulse variable) control 24
■ DIV (divisor) control 25
■ MULTI (multiplier) control 25
■ BATCH control 26
■ INT.B (interval batch) control 28
AUX function 28
Priming function 29
Control functions 29
■ STOP function 29

■ Pre-STOP function 31
■ Interlock function 31
Output functions 32
■ Pump out....32
■ Alarm out 32
■ State out....32
Other functions 32
■ Calibration....32
■ Keypad lock 32
■ Factory default setting 33
■ Anti-chattering factor 33
■ Input/Output logic 33
Combination with the FCP and FCM flow checker/counter....34
■ A. MODE....34
■ B. MODE....35
■ C. MODE 36
■ D. MODE....37

Installation 38

Pump mounting 38
Floor mount....38
■ Mounting on the detachable pump base 38
■ Mounting on the floor (without pump base) 40
Wall mount....41
Plumbing 43
Tube connection 43
Thread connection....46
Check valve/Back pressure valve mounting....48
Tubing layout (pump with Auto degassing type code) 50
Wiring 51
End terminals....51
Power voltage/Earthing 52
■ Pump with the "JA" power plug code 52
■ Pump with the "EU" or "AU" power plug codes 52

Signal wire connection....54
■ EXT IN/OUT....56
■ EXT IN....57
FCP/FCM mounting (purchase separately)....58
■ Flow counter (FCP)....58
■ Flow checker (FCM)....59
■ FCP/FCM wiring....60

Operation....61

Before operation....61
Points to be checked....61
Retightening of head bolts....61
■ Use of hex wrench instead of a torque wrench....62
Degassing....63
■ EWP VC/VS/VE/PC/PS/PE/TC/SH with the MAN air vent port....63
■ EWP FC with no MAN air vent port....66
Flow rate adjustment....69
■ Stroke rate adjustment....71
■ Stroke length adjustment....72
Perform a calibration....73
Before a long period of stoppage (one month or more)....74
Operation programming....75
Programming flow....78
Manual operation....79
EXT operation....80
■ EXT control mode....80
AUX function....82
Priming function....82
Keypad lock....82
■ Keypad lock activation....82
■ Keypad lock release....83
■ Emergency stop with keypads locked....83
Unit change....84
■ Stroke rate unit....84
■ Flow rate unit....84

Menu mode **85**
EXT mode setting 86
■ Flow chart 86
■ EXT mode setting 88
Calibration 98
Input setting 99
Output setting (photocoupler: open collector) 100
■ Target setting 101
■ Alarm setting 102
Flow check 103
■ A. MODE setting 104
■ B. MODE / C. MODE setting 105
■ D. MODE setting 106
Data logging 109
Other setting 110
■ Flow chart 110
■ Other setting 112

Maintenance *119*

Troubleshooting **120**
Inspection **121**
Daily inspection 121
Periodic inspection 121
Wear part replacement **122**
Wear part list 122
Before replacement 123
Valve set replacement 123
■ Discharge valve set disassembly/assembly 123
■ Suction valve set disassembly/assembly 128
■ Auto air vent valve set disassembly/assembly (Auto degassing type only) 129
Diaphragm replacement 130
Exploded view **133**
Pump head, Drive unit & Control unit 133
Pump head 134
■ EWP-A/-B/-C/-D/-E/-F VC/VS/VE/PC/PS/PE/TC 134

■ EWP-B/-C/-D/-E/-F FC 135
■ EWP-B/-C/-D/-E/-F SH 136
■ EWP-B PC/PS/PE -H 137
■ EWP-B SH -H 138
■ EWP-E PC/PS -V 139
■ EWP-B/-C/-D VC/VS -A 140
Specifications/Outer dimensions 141
Specifications 141
■ Pump unit 141
■ Control unit 143
■ European power cable 144
■ Australian power cable 144
■ Asian power cable 144
■ Pump color 144
Outer dimensions 145
■ EWP-019A/-038B/-080C/-130D/-270E/-410F/-420F VC/VS/VE/PC/PS/PE/TC 145
■ EWP-038B/-080C/-130D/-270E/-410F FC 146
■ EWP-038B/-080C/-130D/-270E/-410F SH 147
■ EWP-023B/-054C/-078D VC/VS/VE -C 148
■ EWP-038B PC/PS/PE -H 149
■ EWP-038B SH -H 150
■ EWP-150E PC/PS -V 151
■ EWP-030B/064C/110D VC/VS-A 152
EC DECLARATION OF CONFORMITY 153
UK DECLARATION OF CONFORMITY 154
Anchorage points guide (Wall-mount use of the pump base) 155

Safety instructions

Read through this section before use. This section describes important information for you to prevent personal injury or property damage.

■ Symbols

In this instruction manual, the degree of risk caused by incorrect use is noted with the following symbols. Please pay attention to the information associated with the symbols.

⚠ WARNING	**Indicates mishandling could lead to a fatal or serious accident.**
⚠ CAUTION	**Indicates mishandling could lead to personal injury or property damage.**

A symbol accompanies each precaution, suggesting the use of "Caution", "Prohibited actions" or specific "Requirements".

Caution marks		Prohibited marks		Requirement marks		
						
Caution	Electrical shock	Prohibited	Do not rework or alter	Requirement	Wear protection	Grounding

⚠ Export Restrictions

Technical information contained in this instruction manual might be treated as controlled technology in your countries, due to agreements in international regime for export control.

Please be reminded that export license/permission could be required when this manual is provided, due to export control regulations of your country.

⚠WARNING

Turn off power before service

Risk of electrical shock. Be sure to turn off power to stop the pump and related devices before service is performed.


Electrical shock

Stop operation

If you notice any abnormal or dangerous conditions, suspend operation immediately and inspect/solve problems.


Requirement

Do not use the pump in any condition other than its intended purpose

The use of the pump in any conditions other than those clearly specified may result in failure or injury. Use this product in specified conditions only.


Prohibited

Do not modify the pump

Alterations to the pump carry a high degree of risk. It is not the manufacturer's responsibility for any failure or injury resulting from alterations to the pump.


Do not rework or alter

Wear protective clothing

Always wear protective clothing such as an eye protection, chemical resistant gloves, a mask and a face shield during disassembly, assembly or maintenance work. The specific solution will dictate the degree of protection. Refer to SDS precautions from the solution supplier.


Wear protection

Do not damage the power cable

Do not pull, knot, or crush the power cable. Damage to the power cable could lead to a fire or electrical shock if cut or broken.


Prohibited

Do not operate the pump in a flammable atmosphere

Do not place explosive or flammable material near the pump.


Prohibited

⚠ CAUTION

Qualified personnel only

The pump should be handled or operated by qualified personnel with a full understanding of the pump. Any person not familiar with the product should not take part in the operation or maintenance of the pump.


Requirement

Use specified power only

Do not apply power other than that specified on the nameplate. Otherwise, failure or fire may result. Ensure the pump is properly grounded.


Prohibited

Do not run pump dry

Do not run pump dry for more than 30 minutes (even when the pump runs for degassing). Otherwise, the pump head fixing screws may loosen and liquid may leak. Optimise your system. If the pump runs dry for a long period (for more than 30 minutes), the pump head and the valve guide may deform by friction heat and consequently leakage results.


Caution

Keep electric parts and wiring dry

Risk of fire or electric shock. Install the pump where it can be kept dry.


Prohibited

Ventilation

Fumes or vapours can be hazardous with certain solutions. Ensure proper ventilation at the operation site.


Caution

Do not install/store the pump:

–In a flammable atmosphere.
–In a dusty/humid environment.
–Where ambient temperature can exceed 0-40ºC.
–In direct sunlight or wind & rain.
–Where ambient humidity can exceed 30-90%RH.
Protect the pump with a cover when installing it out of doors.


Prohibited

Spill precautions

Ensure protection and containment of solution in the event of plumbing or pump damage (secondary containment).


Requirement

Do not use the pump in a wet location

The pump is not waterproof. Use of the pump in wet or extremely humid locations could lead to electric shock or short circuit.


Prohibited

Grounding

Risk of electric shock! Always properly ground the pump. Conform to local electric codes.


Grounding

Install a GFCI (earth leakage breaker)

An electrical failure of the pump may adversely affect other devices on the same line. Purchase and install a GFCI (earth leakage breaker) separately.


Electrical shock

Preventative maintenance

Follow instructions in this manual for replacement of wear parts. Do not disassemble the pump beyond the extent of the instructions.


Requirement

Do not use a damaged pump

Use of a damaged pump could lead to an electric shock or death.


Prohibited

Disposal of a used pump

Dispose of any used or damaged pump in accordance with local rules and regulations. If necessary, consult a licensed industrial waste disposal company.


Requirement

Check pump head bolts

Liquid may leak if any of the pump head bolts become loose. Tighten the bolts diagonally and evenly by the following torque before initial operation and at regular intervals (once a three month).

Pump unit	Torque	Bolts
EWP-A/-B/-C/-D	2.16 N•m	M4 hex. socket head bolt
EWP-E	2.55 N•m	M4 hex. socket head bolt
EWP-E-V	2.16 N•m	M4 hex. socket head bolt
EWP-F	2.55 N•m	M5 hex. socket head bolt


Caution

Install a relief valve

Install a relief valve on a discharge line near the pump so as to automatically release the discharge pressure when it exceeds the maximum level.


Requirement

Precautions for use

- Electrical work should be performed by a qualified electrician. Otherwise, personal injury or property damage could result.


Caution

- Select a level location, free from vibration, that won't hold liquid. Anchor the pump with four M5 bolts so it doesn't vibrate. If the pump is not installed level, output may be affected.


Requirement

- When two or more pumps are installed together, vibration may be significant, resulting in poor performance or failure. Select a solid foundation (concrete) and fasten anchor bolts securely to prevent vibration during operation.


Requirement

- Allow sufficient space around the pump for easy access and maintenance.


Caution

- Install the pump as close to the supply tank as possible.


Requirement

- When handling liquids that generate gas bubbles (sodium hypochlorite or hydrazine solution), install the pump in a cool and dark place. Flooded suction installation is strongly recommended.


Requirement

- Use care handling the pump. Do not drop. An impact may affect pump performance. Do not use a pump that has been damaged to avoid the risk of electrical damage or shock.


Prohibited

- The pump has a rating of IP66, but is not waterproof. Do not operate the pump while wet with solution or water. Failure or injury may result. Immediately dry off the pump if it gets wet.


Caution

- Do not close discharge line during operation. Solution may leak or piping may break. Install a relief valve to ensure safety and prevent damaged plumbing.


Caution

- Solution in the discharge line may be under pressure. Release the pressure from the discharge line before disconnecting plumbing or disassembly of the pump to avoid solution spray.


Requirement

- Wear protective clothing when handling or working with pumps. Consult solution SDS for appropriate precautions. Do not come into contact with residual solution.


Caution

- Do not clean the pump or nameplate with a solvent such as benzine or thinner. This may discolour the pump or erase printing. Use a dry or damp cloth or a neutral detergent.


Prohibited

- In accordance with the European Directive 2012/19/EU on waste electrical and electronic equipment (WEEE), this product features the crossed-out wheelie bin symbol. When this product is disposed of in household wastes, toxic components included in it can cause major environmental and human health problems. Use appropriate waste collection systems for recovery and recycling. Contact your local distributor or nearest Iwaki company for the detailed collection systems.



Overview

Pump characteristics, features and part names are described in this section.

Introduction

Pump structure & Operating principle

The EWP series is a diaphragm metering pump which consists of a pump head, a drive unit, and a control unit. A diaphragm is directly driven by electromagnetic force.

Principle of operation

The pulse signal via the control unit generates the electromagnetic force to make reciprocating motion with the assistance of the spring force. The reciprocating motion is transferred to the diaphragm through the shaft and then volumetric change occurs in the pump head. This action transfers liquid along with pump head valve action.

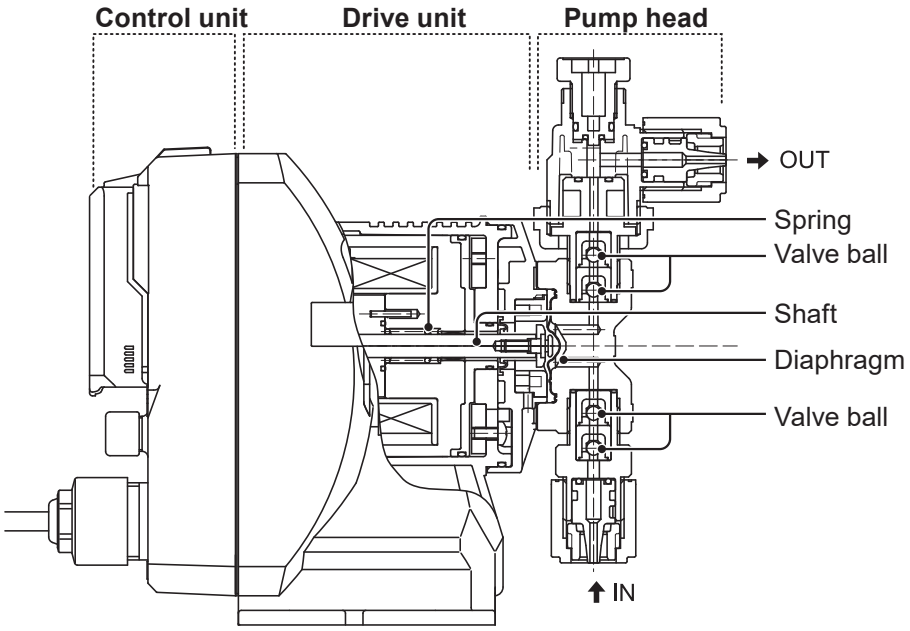

Features

- **Multivoltage operation**
  The EWP series is a multivoltage type (100-240VAC) and can be selected without local power limitations.

- **High resolution flow adjustment**
  A wide range, digitally-controlled, stroke rate adjustment of 0.1 to 100.0% with fine flow tuning (stroke length adjustment).

- **Waterproof and dustproof structure**
  The sealed unit design assures a rating of IP66.
  *Protect the pump with a cover when installing it out of doors.

- **Good visibility**
  Offered with the negative backlight LCD. The auto-sleep display contributes to energy saving.

- **Status LED**
  The Status LED on the controller tells you whether the pump is running, paused, or alarming.

- **Three proportional control modes**
  The ANA.P (analog preset) control mode, ANA.V (analog variable), and PLS.V (pulse variable) regulate your pump corresponding to the internal preset/user patterns of the pump.

- **Four pulse control modes**
  The DIV (divisor) control mode, MULTI (multiplier), BATCH (batch), and INT.B (interval batch) regulate your pump corresponding to the external signal from your device (e.g. paddlewheel flowmeter).

- **Highly-efficient solenoid**
  Realizes higher energy saving and downsizing than ever before.

- **Wall-mountable design**
  If necessary, use the separate pump base to mount the pump on the wall. (except the SH type that is too heavy to be mounted on the wall)

Part names

Pump

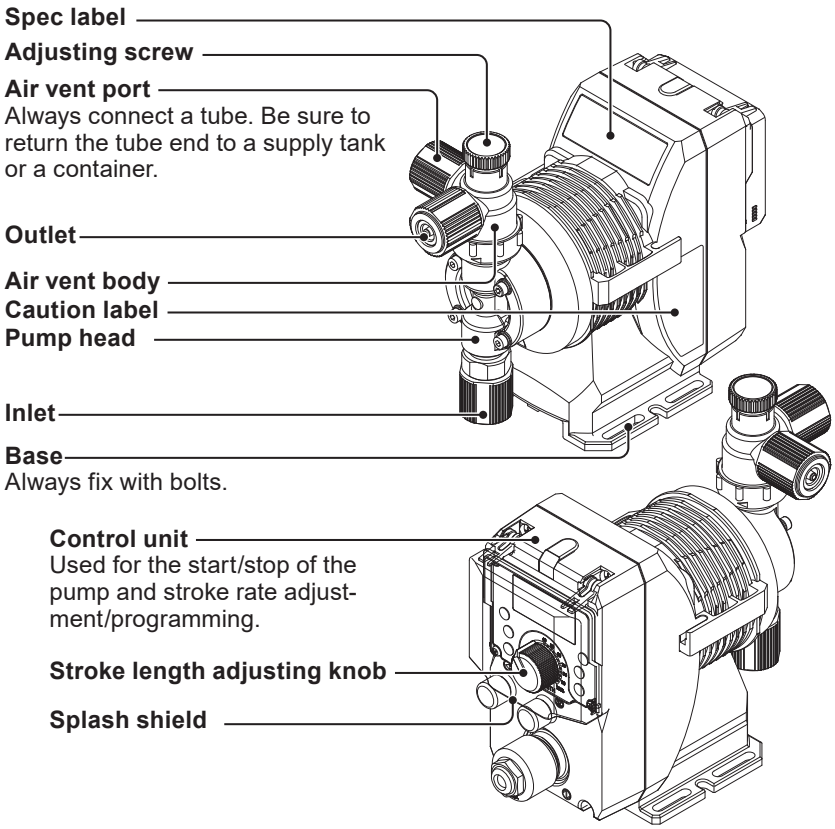

Pump head

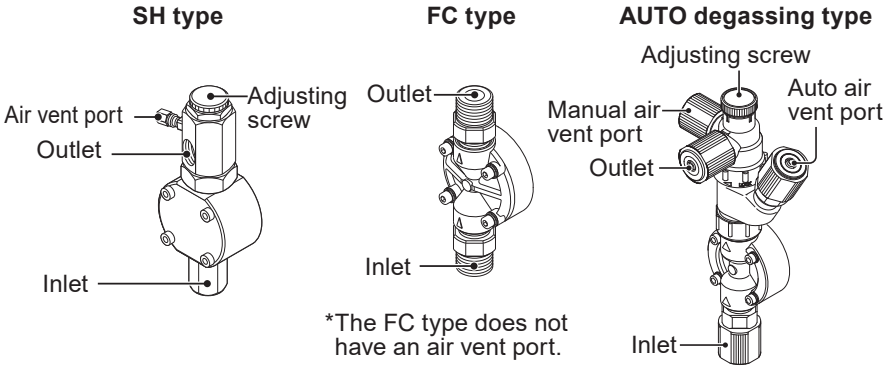

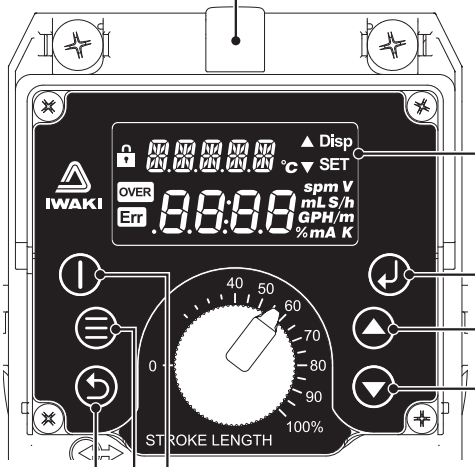

STATUS LED
Tells whether the pump is running, paused, or alarming.

DISPLAY
Tells the pump status, mode, and setting.

ENTER key
Confirms your entry, changes flow units during operation or stop, or starts/stops the BATCH or INT.B.

UP and DOWN keys
Cycle through menu options and numeric values.

START/STOP key
Enters the MANUAL mode or the EXTERNAL mode. Pressing this key for 3 sec runs the pump at the priming speed only while the key is depressed (max 1 min).
*Pressing this key for 3 sec also stops the pump that has locked keypads.

MENU key
Moves from the MAN/EXT selection mode to the Menu mode. Pressing this key for 3 sec in the MAN or EXT mode during operation or stop, the keypads are locked.
*However, keypads won't be locked in the Menu mode.

ESCAPE key
Moves back to the previous page.

■ Display

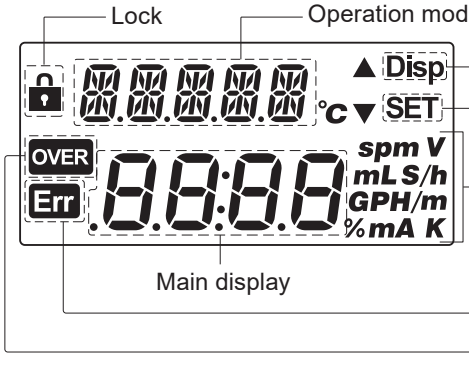

■ Basic displays & Pump states

Display	Status LED			
	Red	Green	Orange	White
	—	Blinks in the MAN RUN mode.	—	—
	—	Blinks in the EXT RUN. Lights in EXT WAIT mode.	—	—
	—	Blinks in AUX RUN mode.	—	—
	—	Blinks in PRIME RUN mode.	—	—
 Appears in turn 	—	—	When PreSTOP signal is input: -Blinks in MAN/ EXT RUN. -Lights in MAN/ EXT WAIT.	—
	—	—	—	Lights in MAN/ EXT selection mode.
	—	—	—	Lights in MAN WAIT mode.
	—	—	—	Lights with the EXT WAIT mode.
	—	—	—	Lights in the MENU mode.

Display	Status LED			
	Red	Green	Orange	Purple
	—	—	—	Lights whenever the STOP signal is input. (except prime mode)
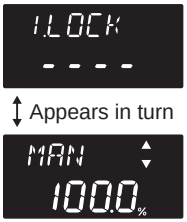	Lights whenever the I.LOCK signal is input. (except prime mode)	—	—	—
	Lights when a liquid transfer error occurs.	—	—	—

Identification codes

The model codes of the pump represents the following information.

Pump

EWP - 038B VC 01 N - EU R - _

a b c d e f g h

a. Series name

EWP: Multivoltage electromagnetic metering pump

b. Pump unit

Code	Output capacity (mL/min)	Pumphead-Diaphragm code
XXXA	019	A
XXXB	023/ 030/ 038	B
XXXC	054/ 064/ 080	C
XXXD	078/ 110/ 130	D
XXXE	150/ 270	E
XXXF	410/ 420	F

*The numeric code in the “XXX” field varies depending on the wet-end material or the special version.

c. Wet end materials

<table>
<tr><th>Code</th><th>Pump head</th><th>Valve</th><th>Valve seat</th><th>O ring</th><th>Diaphragm</th><th>Gasket</th></tr>
<tr><td>VC</td><td rowspan="3">PVC</td><td>CE</td><td>FKM</td><td>FKM</td><td rowspan="8">PTFE (bonded to EPDM)</td><td rowspan="8">PTFE</td></tr>
<tr><td>VS</td><td>SUS316 equivalent</td><td rowspan="2">EPDM</td><td rowspan="2">EPDM</td></tr>
<tr><td>VE</td><td rowspan="2">CE</td></tr>
<tr><td>PC</td><td rowspan="3">GFRPP</td><td>FKM</td><td>FKM</td></tr>
<tr><td>PS</td><td>SUS316 equivalent</td><td>EPDM</td><td>EPDM</td></tr>
<tr><td>PE</td><td rowspan="3">CE</td></tr>
<tr><td>TC</td><td rowspan="2">PVDF</td><td>FKM</td><td>FKM</td></tr>
<tr><td>FC</td><td>PCTFE</td><td>—</td></tr>
<tr><td>SH</td><td>SUS316</td><td>HC</td><td>SUS316</td><td>—</td></tr>
</table>

Material code

PVC : Polyvinyl chloride
GFRPP : Glassfiber-reinforced polypropylene
EPDM : Ethylene-propylene rubber
FKM : Fluorine-contained rubber
SUS316 : Austenitic stainless steel
PTFE : Polytetrafluoroethylene
PCTFE : Polychlorotrifluoroethylene
HC : HASTELLOY® C-276 equivalent
CE : Alumina ceramic
PVDF : Polyvinylidene difluoride

d. Connection

Code	Tube I.D. × O.D.	Wet ends	Pump type
01	ø4×ø9 mm	VC/VS/VE/PC/PS/PE	A/B/C/D
02	ø4×ø6 mm	VC/VS/VE/PC/PS/PE/TC	
03	ø6×ø8 mm		
04	ø8×ø13 mm	VC/VS/VE/PC/PS/PE	E/F
05	ø9×ø12 mm		
06	ø10×ø12 mm	TC	
07	ø1/4"×ø3/8"	VC/VS/VE/PC/PS/PE/TC	A/B/C/D
08	ø3/8"×ø1/2"		E/F
09	Rc1/4"	VC/VS/PC/PS/TC/FC/SH	B/C/D/E/F
10	NPT1/4"	FC/SH	
18	ø6×ø11 mm	VC/VS/VE	A/B/C/D
21	ø9×ø12 mm (outlet) ø15×ø22 mm (inlet)	PC-V/PS-V	E
23	ø6×ø12 mm	VC/VS/VE	A/B/C/D/E/F
24	ø5×ø8 mm	VC/VS/VE/TC	A/B/C/D
33	Rc1/4" (outlet) ø4×ø6 mm (inlet/air)	PC-H/PS-H/PE-H	B

e. Special version

PD code*	N	C	H	V	A
A	19 mL/min	–	–	–	–
B	38 mL/min	23 mL/min	38 mL/min	–	30 mL/min
C	80 mL/min	54 mL/min	–	–	64 mL/min
D	130 mL/min	78 mL/min	–	–	110 mL/min
E	270 mL/min	–	–	150 mL/min	–
F	410/420 mL/min	–	–	–	–

N: Standard C: High compression type H: High pressure type
V: High viscosity type A: Auto degassing type
*PD code stands for Pumphead-Diaphragm code (see the left page)

f. Area

Code	Area	Power plug	Cable length
JA	Asia	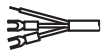	2000 mm
EU	Europe	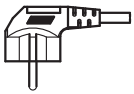	
AU	Australia	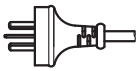	

g. Controller

R: Standard

h. Automatic air vent materials

Code	Valve	Separate pin	Wet ends
Blank	Zirconia ceramic	Titanium	VC
	SUS316 equivalent	SUS316	VS
HC	Zirconia ceramic	HC	VC
S6	Zirconia ceramic	SUS316	VC

Manual mode

Run/stop the pump with the ⏻ key. A stroke rate (MAN speed) can be changed with the ▲ and ▼ keys at any time during operation or stop.

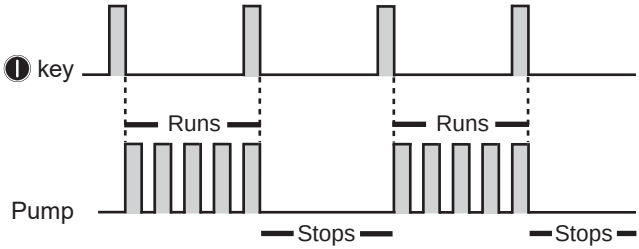

EXT mode

■ ANA.P (analog preset) control

The pump increases/decreases a stroke/flow rate (between 0 and the maximum stroke rate of the pump that is user-settable) in proportion to 0-20mA current input. Four preset patterns (4-20mA, 20-4mA, 0-20mA, and 20-0mA) are provided. See page 88 for details. To show the input current value (mA. IN) during operation, push the ▼ key. To return to the stroke rate or the flow rate display, push the ▲ key.

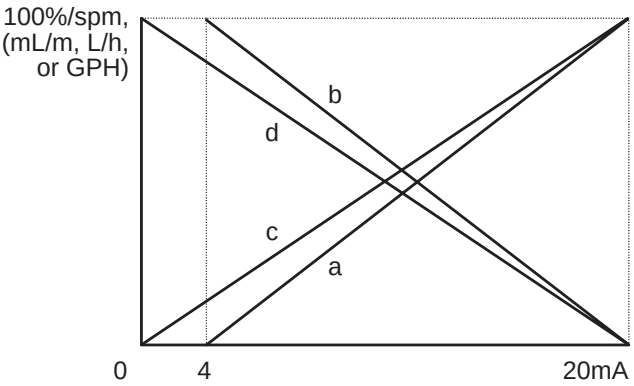

Condition:
a. 4-20mA (default)
b. 20-4mA
c. 0-20mA
d. 20-0mA

■ ANA.V (analog variable) control

The pump increases/decreases a stroke/flow rate (between 0 and the maximum stroke rate of the pump that is user-settable) in proportion to 0-20mA. Determine the SP1 (setpoint 1) and SP2 (setpoint 2) and choose one of the LINE, BOX and LIMIT patterns. See page 90 for details. To show the input current value (mA.IN) during operation, push the ▼ key. To return to the stroke rate (spm) or the flow rate (%) display, push the ▲ key.

<LINE>

A stroke/flow rate changes with a current value by a set line.

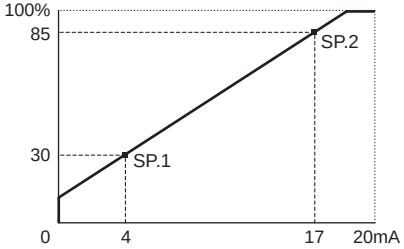

Condition:
SP.1 = 4 mA, 30%
SP.2 = 17 mA, 85%

<BOX>

A stroke/flow rate changes with a current value by a set line. The rate does not exceed the Set Point 2 but then falls to 0 before the Set Point 1.

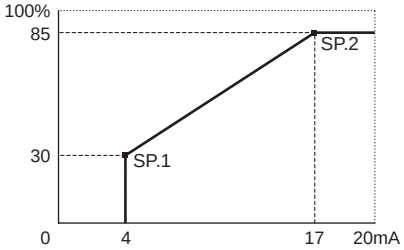

Condition:
SP.1 = 4 mA, 30%
SP.2 = 17 mA, 85%

<LIMIT>

A stroke/flow rate changes with a current value by a set line. The rate does not fall below the Set Point 1 or exceed the Set Point 2.

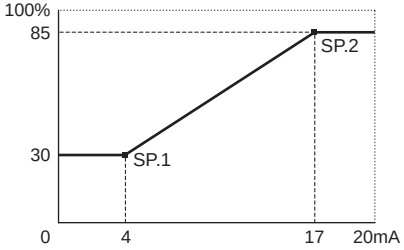

Condition:
SP.1 = 4 mA, 30%
SP.2 = 17 mA, 85%

■ PLS.V (pulse variable) control

The pump increases/decreases a stroke/flow rate (between 0 and the maximum stroke rate of the pump that is user-settable) in proportion to 0-100Hz (or 0-500Hz, user selectable). Determine the SP1 (setpoint 1) and SP2 (setpoint 2) and choose one of the LINE, BOX and LIMIT patterns. See page 92 as well.

<LINE>

A stroke/flow rate changes with a pulse rate by a set line.

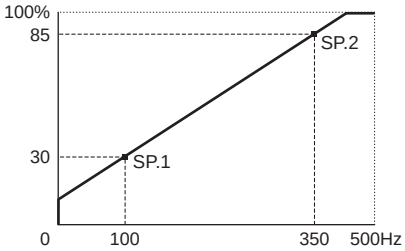

Condition:
SP.1 = 100Hz, 30%
SP.2 = 350Hz, 85%

<BOX>

A stroke/flow rate changes with a pulse rate by a set line. The rate does not exceed the Set Point 2 but then falls to 0 before the Set Point 1.

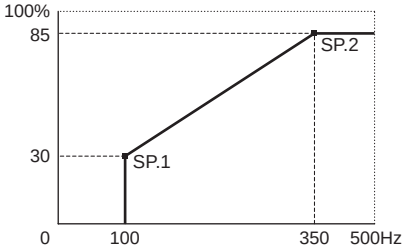

Condition:
SP.1 = 100Hz, 30%
SP.2 = 350Hz, 85%

<LIMIT>

A stroke/flow rate changes with a pulse rate by a set line. The rate does not fall below the Set Point 1 or exceed the Set Point 2.

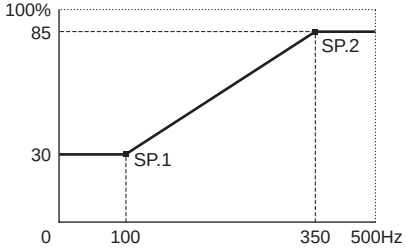

Condition:
SP.1 = 100Hz, 30%
SP.2 = 350Hz, 85%

■ DIV (divisor) control

The pump can accept a non-powered (dry contact) pulse signal from a flowmeter or other similar instrument. The pump can be set to divide pulses by a factor of 1 to 9999.

*The pump does not run exceeding the MAN speed at any pulse rate.
*The pump makes one stroke per pulse when the divisor is set to 1.

Example) When the divisor is set to 5, the pump makes one stroke every 5 signals.

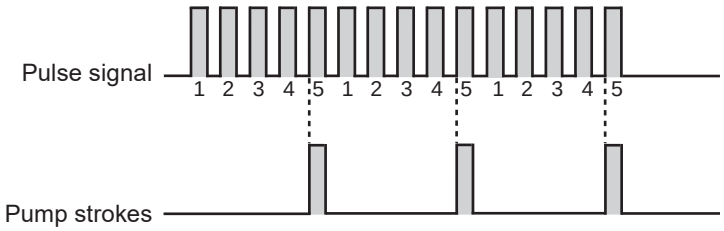

Buffer (Pulse Input Memory): As digital pulses come into the pump, internal memory can be set to store these pulses if they come in too fast for the pump to keep up. Once the incoming pulses slow or stop, the pump will work off the excess pulses. The factory default settings are that the memory is OFF for the divide mode.

*The buffer stores the external signals for up to 65535 strokes.

■ MULTI (multiplier) control

The pump can accept a non-powered (dry contact) pulse signal from a flowmeter or other similar instrument. In multiply mode, 1 input pulse can produce 1 to 9999 pump strokes.

*In the EXT operation, the pump runs at the MAN speed at any pulse rate.
*The pump makes one stroke per pulse when the multiplier is set to 1.

Example) When the multiplier is set to 5, the pump makes five strokes per signal.

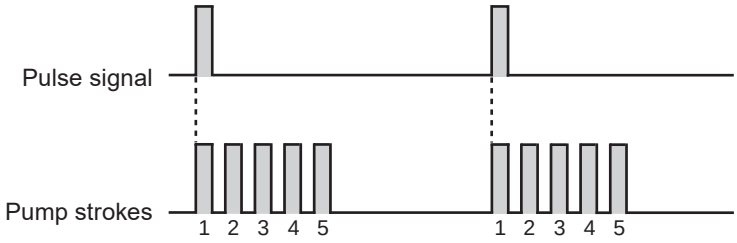

Buffer (Pulse Input Memory): As digital pulses come into the pump, internal memory can be set to store these pulses if they come in too fast for the pump to keep up. Once the incoming pulses slow or stop, the pump will work off the excess pulses. The factory default settings are that the memory is OFF for the multiply mode.

*The buffer stores the external signals for up to 65535 strokes.

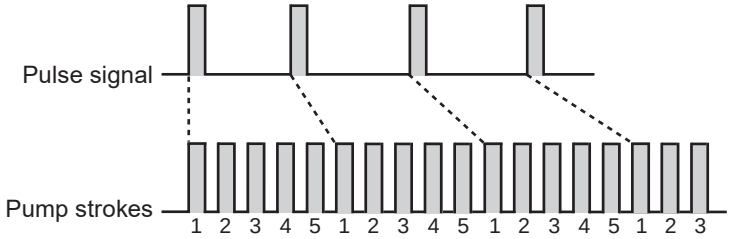

■ BATCH control

In the batch control, the pump runs until the set volume per pulse is completed and stops afterward. The batch volume shown on the pump screen is getting lower as feeding advances.

*The pump runs at the MAN speed.

*The alarm signal that lets you know of the completion of the batch feed can be set to the OUT 1 terminal. See page 100.

When "bF.MEM" is oFF:

Any input of the external pulse signal will be cancelled when the pump is activated for the earlier pulse input. The next dosing becomes ready after the preset flow volume has been completed.

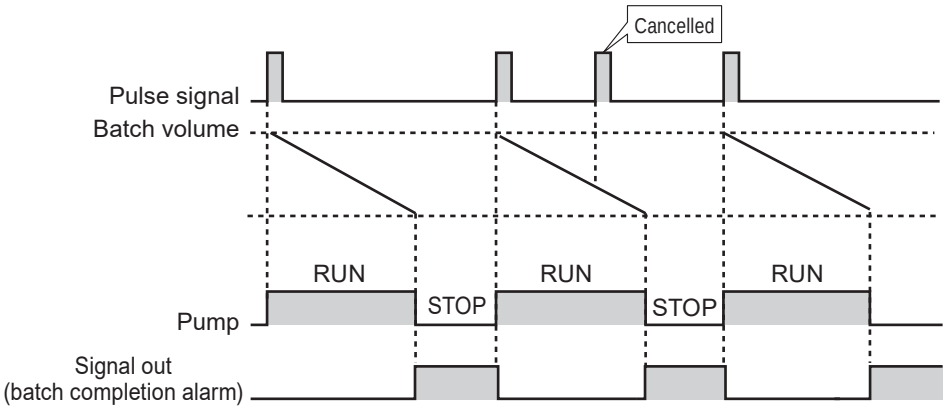

When "bF.MEM" is on:

Every time the external pulse signal is input, the preset flow volume per pulse is added to the earlier volume for the earlier pulse input (added up to 65535 pulses or 99.9999 litre, whichever reached first).

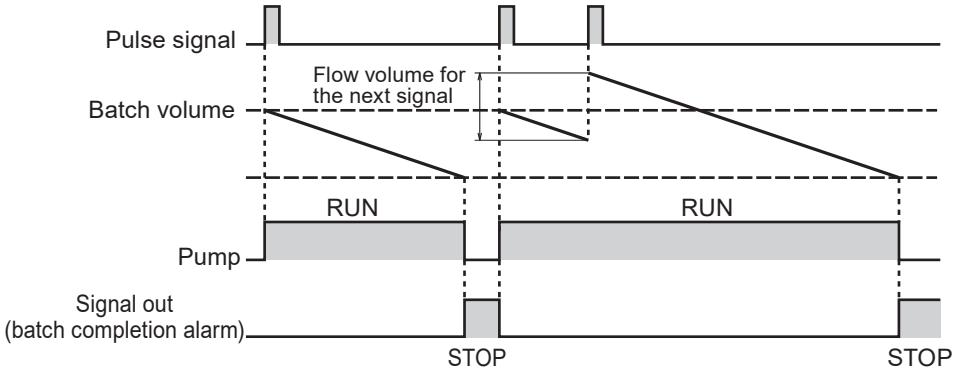

Pulse input with the Enter key:

Instead of the pulse signal input, pushing the ↵ key can start the batch control.

*If the ↵ key is pushed before the batch volume is finished, that volume is cancelled and the pump stops. No matter whether the buffer is turned ON or OFF.

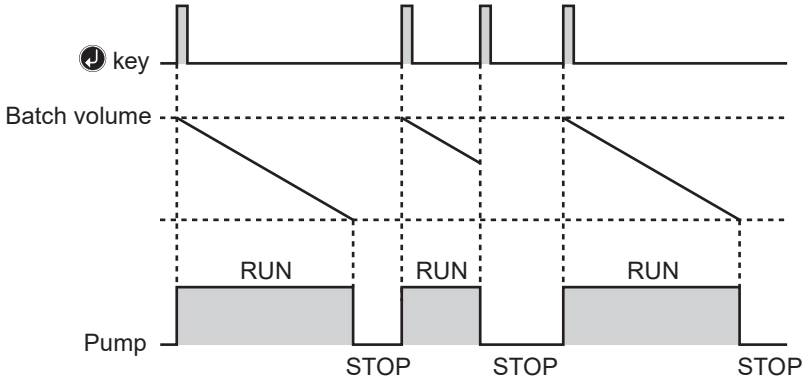

■ INT.B (interval batch) control

To make an interval batch control, set a date and time interval and the batch volume. The EWP produces the preset batch volume at a set interval. In the diagram below, the interval is set to 1 hour.

*The pump runs at the MAN speed.
*The control is triggered by either the external pulse signal or the push of the key. Push the key to stop the control.

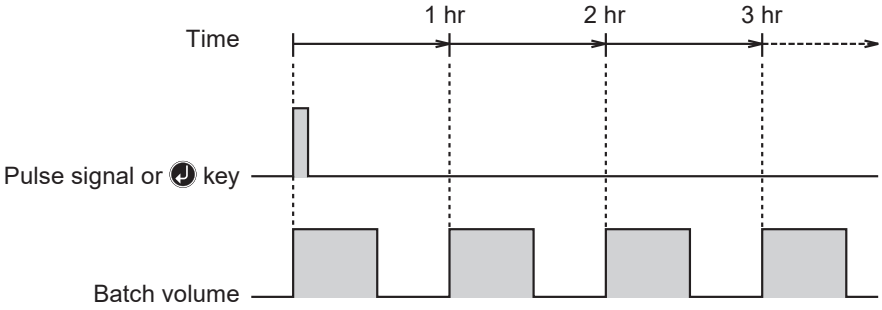

AUX function

The pump runs at the AUX speed while receiving the external signal via the AUX terminal. See page 82. Use this function to prime the pump or to remove entrained air in operation.

*Set the AUX speed in advance.
*This function is enabled during the MAN RUN mode or the EXT RUN mode. Once the AUX signal is stopped, the mode returns to the MAN speed or restarts the programmed EXT mode.

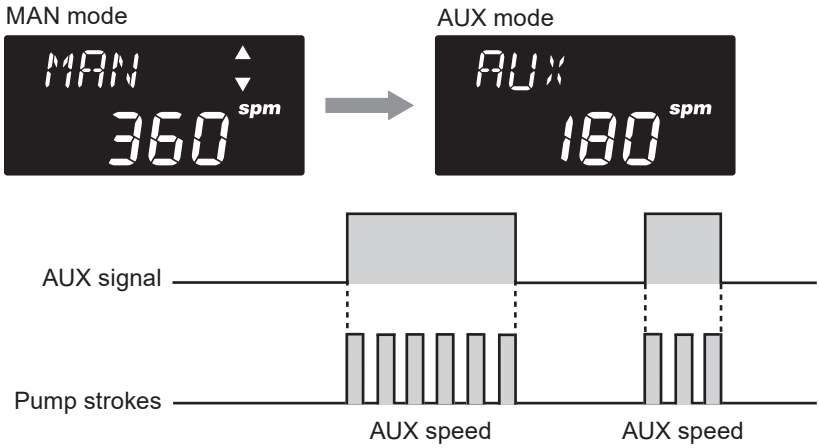

Priming function

The pump runs at the maximum stroke rate while the ⏻ key is depressed. Use this function for priming or degassing. The pump returns to the MAN speed after this key is released. See page 82 for details.

*This function is enabled in the MAN mode or EXT mode.

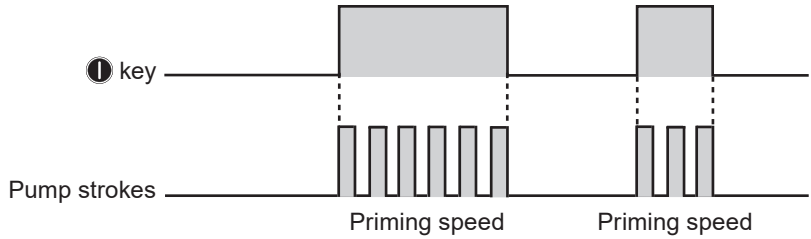

Control functions

■ STOP function

The start/stop of the pump can be controlled by external devices such as a level sensor. The I.LOCK function dominate this function.

*You can relate this input to the alarm output. See page 100 as well.

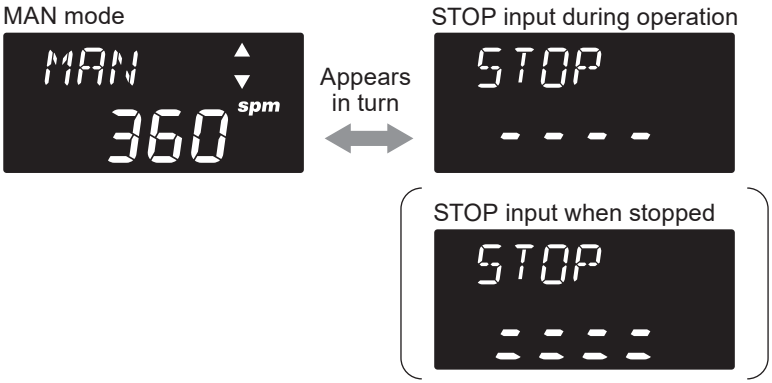

When the "n.o" logic option is selected (page 115):

The pump stops while receiving the external signal via the STOP terminal (normally-open contact). The status LED lights purple.

*Opening the STOP circuit resumes pump operation.

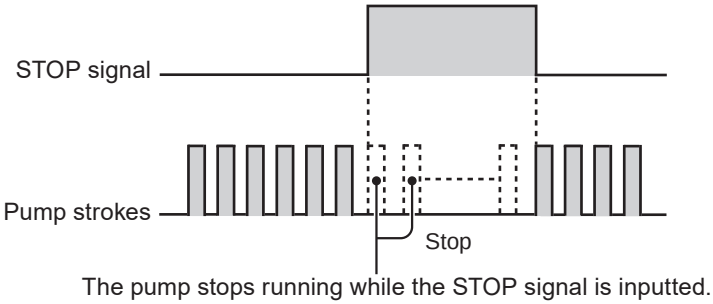

When the "n.c" logic option is selected (page 115):

The pump stops while NOT receiving the external signal via the STOP terminal (normally-closed contact). The status LED lights purple.

*Closing the STOP circuit resumes pump operation.

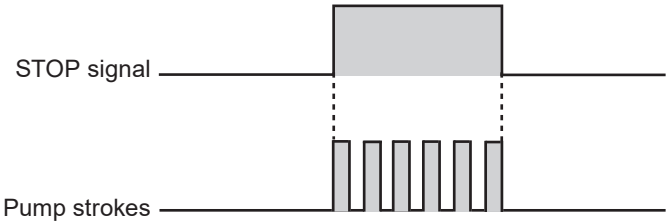

■ Pre-STOP function

The Pre-STOP signal has nothing to do with pausing or resuming the pump operation but reminds you of a low liquid level or empty tank. The status LED blinks orange.

*You can relate this input to the alarm output.

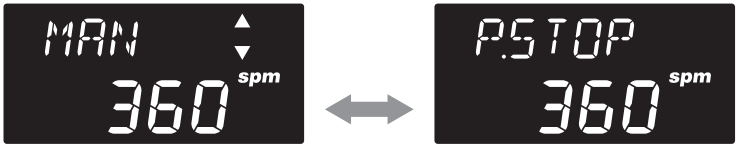

When the "n.o" option is selected (page 115):

The status LED blinks/lights orange while the pump is receiving the external signal via the Pre-STOP terminal (normally-open contact).

When the "n.c" option is selected (page 115):

The status LED blinks/lights orange while the pump is NOT receiving the external signal via the Pre-STOP terminal (normally-closed contact).

■ Interlock function

The interlock switch can be tied directly into the pumps to stop or start operation. A typical example is emergency stop of the pump as this signal dominates any other external signal. See page 100 as well.

*You can relate this input to the alarm output.

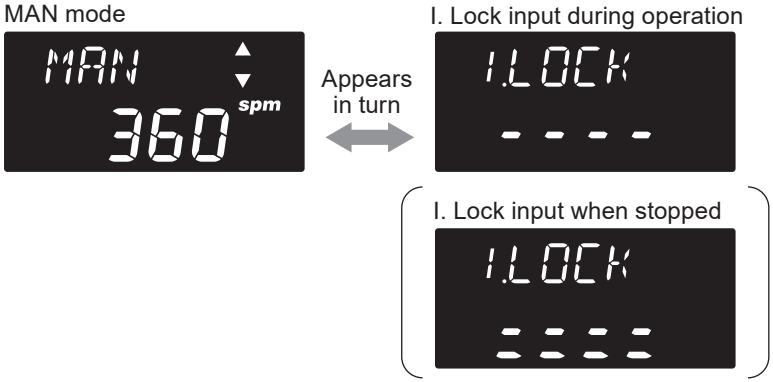

Output functions

The pump has the following outputs with different functions.

■ Pump out

The pump transmits the signals to another pump or your equipment in synchronous with strokes.

■ Alarm out

The pump transmits the signal when:

- the STOP signal is input (e.g. Low-Low alarm output from the level sensor),
- the Pre-STOP signal is input (e.g. Low alarm output from the level sensor),
- the Interlock signal is input, or
- the batch control is finished.

■ State out

The pump transmits the signal while the pump is running. The signal stops at the wait state or when the pump is stopped by the STOP/I.LOCK signal. This signal can be used as an answer-back signal to an operating command.

Other functions

■ Calibration

Calculate the output capacity per stroke by dividing the delivered liquid volume by the number of strokes. Calibration should be made in the actual piping system with the adjusted stroke rate/length, or the accuracy may decrease. See page 73 as well.

■ Keypad lock

This pump is shipped with the access codes of default values (0000). In order to prevent unauthorized tampering, you will need to change the access codes to your own values. See pages 82 and 117 for details.

■ Factory default setting

Power on the pump while depressing the ⟲ key and hold it for 3 seconds to get it back to the factory default setting besides the logging data.

Turn on the pump while pressing ⟲ key → Restoring the factory default



■ Anti-chattering factor

Set the bounce threshold based on the actual pulse width (ON time) in order to prevent the adverse effect of chattering (contact bounce) and electrical noise. This pump is designed to receive the external signal of the 50% duty cycle. The factory default threshold is 5 msec (100Hz ON time). With this value, the control unit recognizes the signal of 5 msec or wider ON time (or OFF time). Selecting the smaller 3 msec will allow shorter duration pulses to be recognized (typical for Hall Effect input), while the 20 or 50 msec setting will help to reduce erroneous pulses from noise (as from a reed switch).

Glossary

Chattering

The rapid, repetitive noises made from contact bounce of the mechanical relay or switch. Chattering can cause malfunction to electric devices or parts.

■ Input/Output logic

Select “normally open” or “normally closed” for the INPUT 1, 2, and 3 as well as the signal OUTPUT 1. See page 115 as well.

Combination with the FCP and FCM flow checker/counter

The FCP-1 VC/VE/PC/PE flow counter and the FCM-VC/VH-MS flow checker detect each pulsation flow from the pump and feed back pulse signals to the pump. The pump recognizes abnormal conditions when the feedback signals do not match the number of pump strokes.
The following four operating patterns are available.

■ A. MODE

If no feedback signal is received from the FCP/FCM within the set number of strokes (FC.NUM: Number of empty strokes), the pump stops and outputs an alarm via the OUT1 terminal, displaying "FLOW" and "Err" on the screen. Press the start/stop key to clear this error.

*FC.NUM: Number of empty strokes user settable in the user mode

When FC.NUM is set to 10:

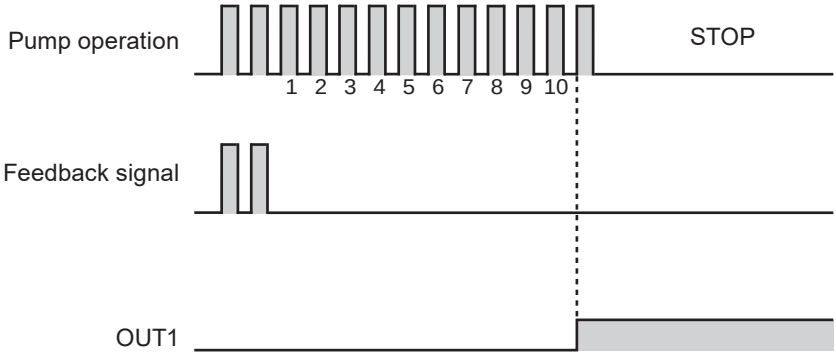

■ B. MODE

If no feedback signal is received from the FCP/FCM within the first set number of strokes (FC.NUM: Number of empty strokes), the pump outputs an alarm via the OUT1 terminal while continuing operation.
If no further feedback signal is received for the second set number of strokes (FC.POF: Empty strokes to pump off), the pump stops and displays "FLOW" and "Err" on the screen.
Press the start/stop key to clear this error.

When FC.NUM is set to 10 and FC.POF to 30:

<No feedback signal recovery>

The pump stops if no feedback signal is received for an additional 30 strokes (FC.POF) after 10 empty strokes (FC.NUM).

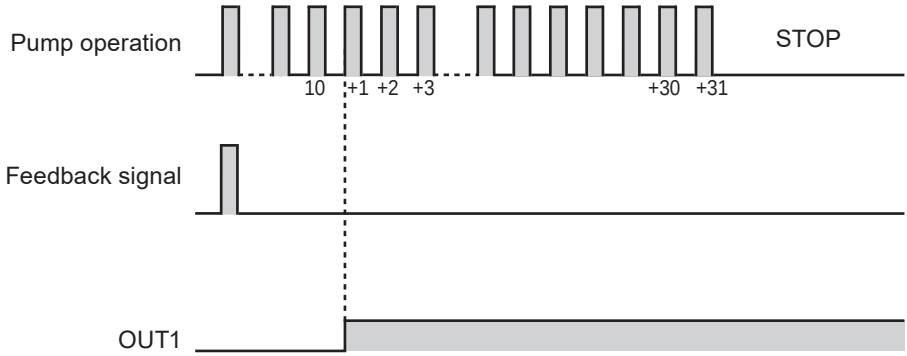

<Feedback signal recovery>

After 10 empty strokes (FC.NUM), the pump continues running if a feedback signal is received within 30 strokes (FC.POF)

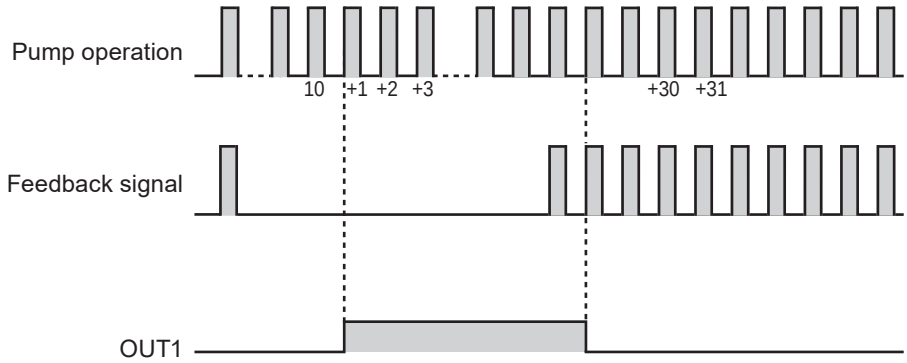

■ C. MODE

If no feedback signal is received from the FCP/FCM within the set number of empty strokes (FC.NUM) plus the set number of strokes (FC.POF), the pump stops, displays "FLOW" and "Err" on the pump screen, and outputs an alarm via the OUT1 terminal

Press the start/stop key to clear this error.

When FC.NUM is set to 10 and FC.POF to 30:

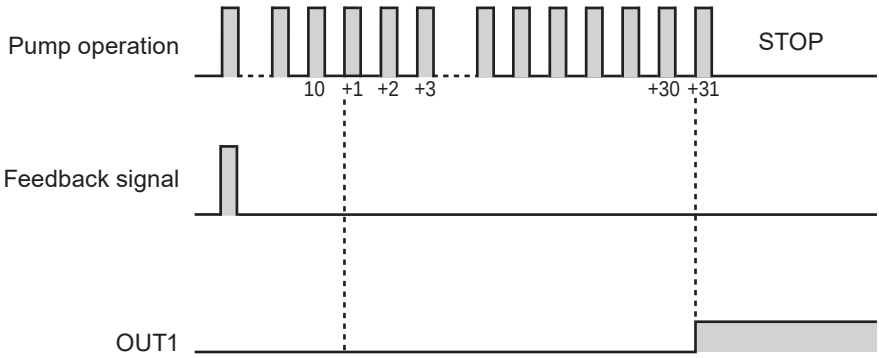

■ D. MODE

The pump operates in MAN or EXT mode for the first set time (FC.TIM: Detection time), then at maximum speed for the second set time (FC.PRM: Priming time).

If feedback signals from the FCP/FCM are continuously received during the return time (FC.RTN), the pump returns to normal operation. Otherwise, the pump stops, displays "FLOW" and "Err" on the screen, and outputs an alarm via the OUT1 terminal. Press the start/stop key to clear this error.

When FC.TIM is set to 2 min, FC.PRM to 5 min and FC.RTN to 30 sec:

<No feedback signal recovery>

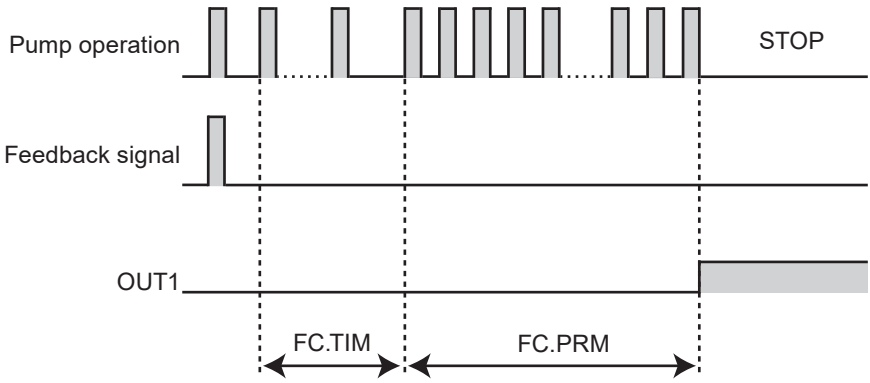

<Feedback signal recovery>

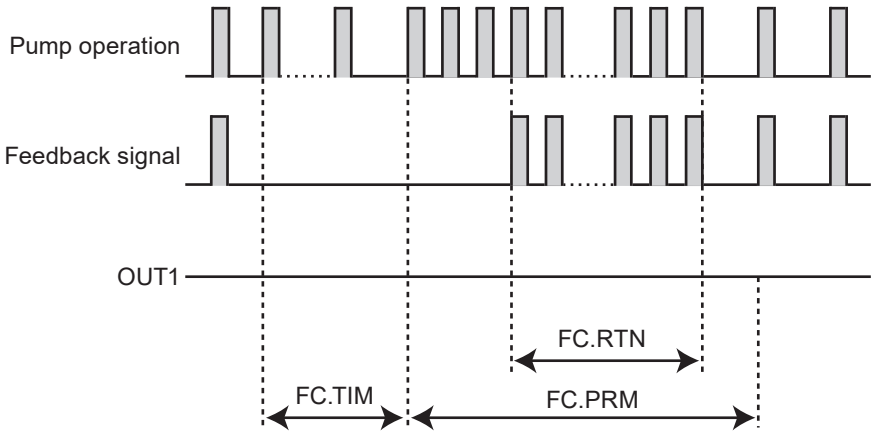

Installation

This section describes the installation of the pump, tubing and wiring. Read through this section before work.

Points to be Observed

- Risk of electrical shock. Be sure to turn off power to stop the pump and related devices before service is performed.
- If you notice any abnormal or dangerous conditions, suspend operation immediately and inspect/solve problems.
- Do not place explosive or flammable material near the pump.
- Do not use a damaged pump. Use of a damaged pump could lead to an electric shock or death.
- Do not mount the pump in an area with mechanical vibration. Ensure that the pump base does not experience vibration while it is being transported.
- Do not reuse the old pump base for holding the new pump.

Pump mounting

Select an installation location and mount the pump.

Floor mount

There are two ways to mount the pump on a level floor.

■ Mounting on the detachable pump base

A pre-installed pump base will help easy installation and maintenance. A tubed, wired, and programmed pump can be mounted in place on the pump base, and removed as it is, also.

Necessary tools

- Four M5 cap bolts (purchase separately)
- 4 mm hex wrench

1 Select a suitable place

Always select a flat floor free of vibration. See page 12 as well.

*Flooded suction is strongly recommended, especially when pumping liquids that readily generate gas bubbles. Sodium hypochlorite and hydrogen peroxide are common examples of such liquids.

2 Use the four M5 head bolts and fix the pump base

Be sure to fix the pump base at four points.

NOTE

If the pump is not installed level, output may be affected.

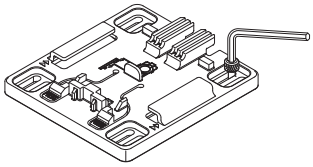

3 Slide the pump onto the pump base

All the way until the pump clicks into the PRESS hooks of the separate pump base.

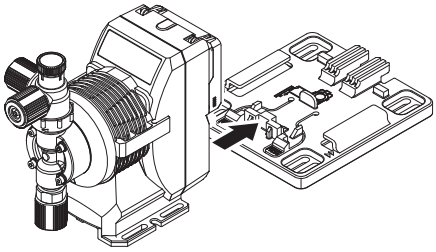

To remove the pump from the pump base, slide forward the pump while depressing the "PRESS" hooks.

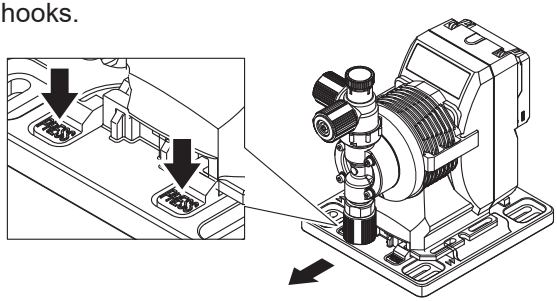

NOTE

Be careful not to catch your finger in the PRESS hooks.

■ Mounting on the floor (without pump base)

Necessary tools

- Four M5 bolts (purchase separately)
- Adjustable wrench
- Two baseplates (pumps with SH wet end code)

1 Select a suitable place

Always select a flat floor free of vibration. See page 12 as well.

*Flooded suction is strongly recommended, especially when pumping liquids that readily generate gas bubbles. Sodium hypochlorite and hydrogen peroxide are common examples of such liquids.

2 Place two baseplates on the pump (SH only)

The pump with the SH wet end code is heavier than other models. Always use the attached metal baseplates to reinforce the pump's base.

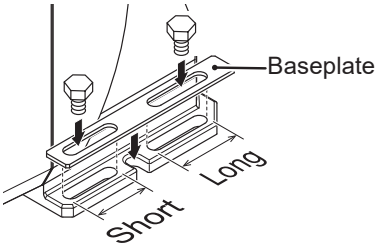

3 Use the four M5 bolts and fix the pump

Be sure to fix the base at four points.

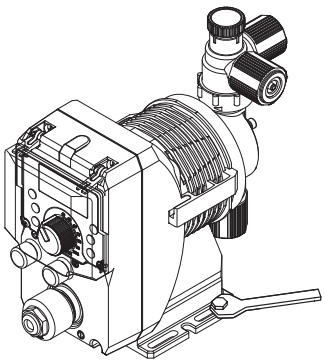

Wall mount

The pump can be mounted on the wall also (except the pump with SH wet end code).

Necessary tools

- Four M5 cap bolts (purchase separately)
- 4 mm hex wrench

1 **Select a suitable place**

The pump should be mounted on a vertical wall that is firm, vibration-free surface, and easily-accessible.

2 **Use the M5 anchors to create vertical mounting holes**

Use the copy of the mounting hole dimensions on page 155 to locate the mounting hole positions.

3 **Use the M5 cap bolts to mount the pump base using the holes**

The pump base has a mounting direction. See below.

*Always check that the cap bolts are caught by the upper end of the mounting slots of the pump base.

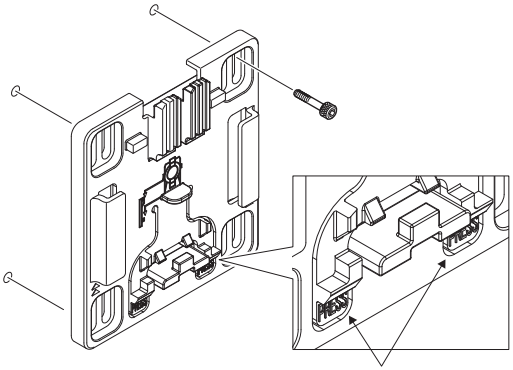

PRESS hooks downwards

4 Slide the pump into the pump base

All the way until the pump clicks into the PRESS hooks of the pump base.

*The pump can be mounted from both the right side and the left side.

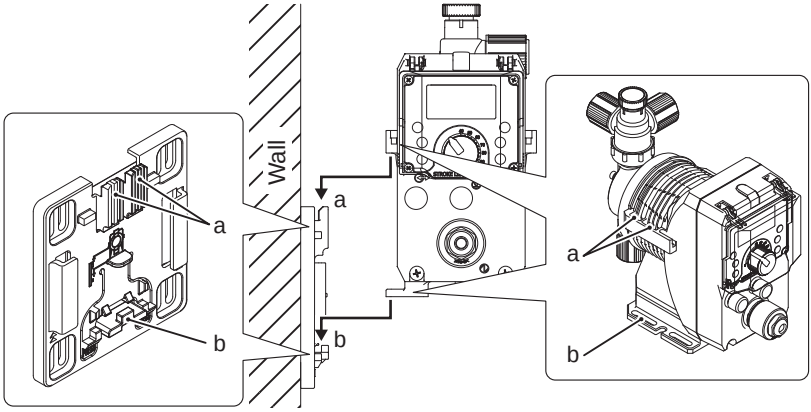

5 Check that:

- The PRESS hooks hold the pump securely.
- The pump stays horizontal.

To remove the pump from the pump base, slide out the pump while depressing the PRESS hooks.

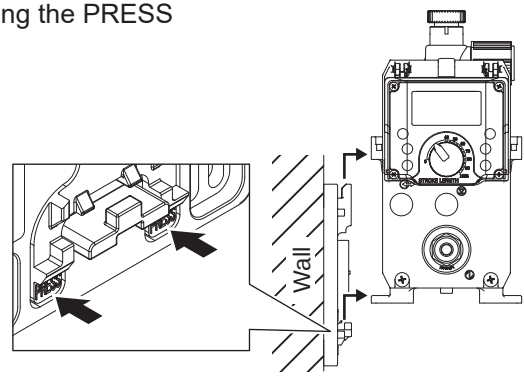

NOTE

Be careful not to drop the pump.

Plumbing

Connect tubes to the pump and install a check valve.

Before operation

• Cut the tube ends flat.

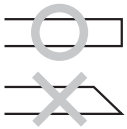

Tube end (side view)

Necessary tools

• 38 mm or wider adjustable wrench

Tube connection

a. Pass the tube through the fitting nut and stopper, and then slide it down onto the adaptor as far as it will go.
b. Put the tube end (adaptor) onto the fitting. Then hand tighten the fitting nut.
c. Retighten the fitting nut by turning it further 180 degrees with an adjustable wrench so it crushes into the tube a little.

*Do not use excessive force when tightening the plastic fitting nut.

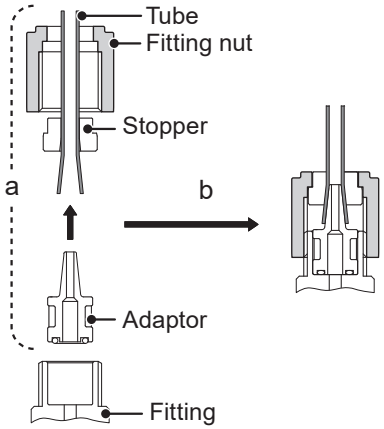

When the tube is removed and then reconnected

a. If the fitting nut, stopper, adaptor, fitting, or tube surface is wet with a chemical liquid, flush with tap water and then dry off. Wet parts won't bite into the tube successfully, and the tube may slips out of the connection with a chemical spill.
b. When removing the connection, if the adaptor has become stuck in the crushed tube and stopper and those parts can not be separated, contact us for a new adaptor/stopper set.
c. Do not reuse the same crushed tube end to reseal the tubing. Cut off the end and start with new tubing to ensure a new seal is established.
d. Use a new tube if the old tube is hardened, swollen, discoloured, cracked, worn, or sticky.

1 Connect tubes into the pump inlet and outlet

*Use the proper tube size depending on wet end materials and the pump type. See page 20.

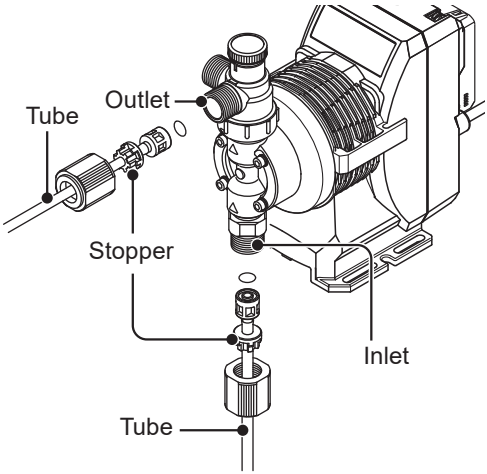

2 Connect a tube to establish the air vent line

Route back the other tube end to a supply tank or a container.

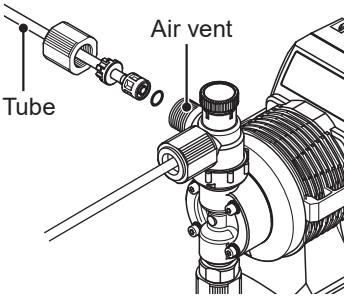

3 Determine the air vent body A direction

a. Loosen the lock nut.

b. Turn the air vent body A to the optimal direction.

c. Hand-tighten the lock nut, holding the air vent body A.

d. Use an adjustable wrench to turn the lock nut 90° further from the hand-tightened point.

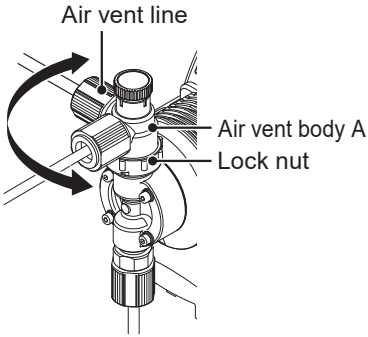

4 Connect an air bleed tube to establish the AUTO air vent line (Auto degassing type only)

Route back the other tube end to a supply tank or a container.

Even after gas is eliminated from the pump, a small amount of liquid is continuously expelled through the air vent path as long as the pump is running (you will see more liquid in siphoning).

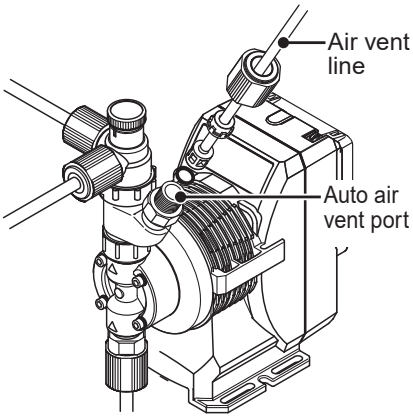

5 Determine the AUTO air vent port direction (Auto degassing type only)

The fitting adaptor can rotate 90 degrees.

a. Loosen the lower lock nut.
b. Turn the fitting adaptor to the optimal direction.
c. Hand-tighten the lower lock nut, holding the fitting adaptor.
d. Use an adjustable wrench or a 32 mm spanner to turn the lock nut further 90 degrees.

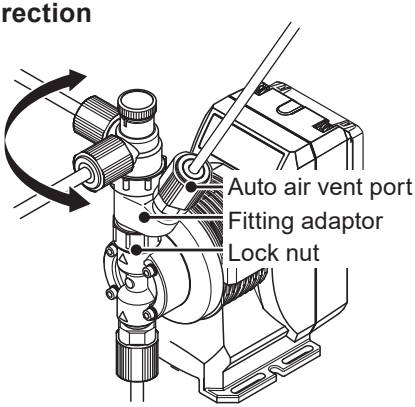

Thread connection

1 **Wrap a sealing tape around the threads of the discharge/ suction pipe and tighten them**

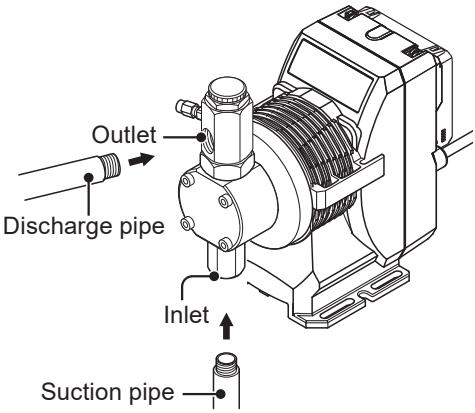

2 **Establish the air vent line**

a. Loosen the nut. Pass the air vent tube through the nut.

b. Slide the air vent tube down into the male thread connector as far as it will go.

c. Hand-tighten the nut.

d. Use an adjustable wrench to turn the nut 450° further from the hand-tightened point.

e. Route back the other tube end to a supply tank or a container.

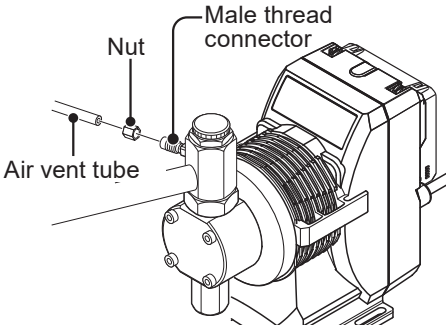

Tubing layout

Flooded suction application

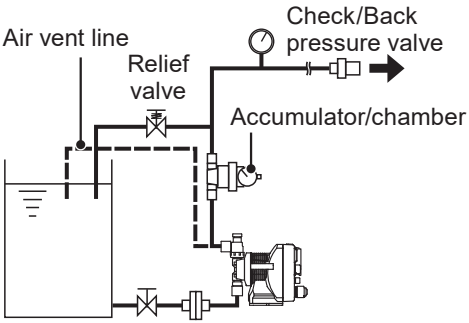

Suction lift application

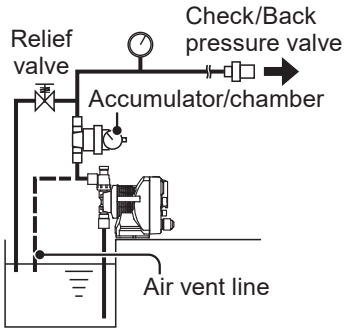

*Flooded suction is strongly recommended, especially when pumping liquids that readily generate gas bubbles. Sodium hypochlorite and hydrogen peroxide are common examples of such liquids.

NOTE

The air vent port is not provided to the EWP with FC wet ends. Purchase separately and install an external air vent valve to your piping as the right diagram shows.

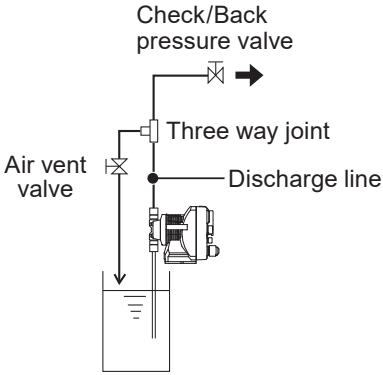

Check valve/Back pressure valve mounting

Install an optional check valve or a back pressure valve to the pump for the prevention of a back flow, siphon and overfeeding. In the following cases be sure to install the check valve.

• A suction side liquid level is higher than the discharge side.

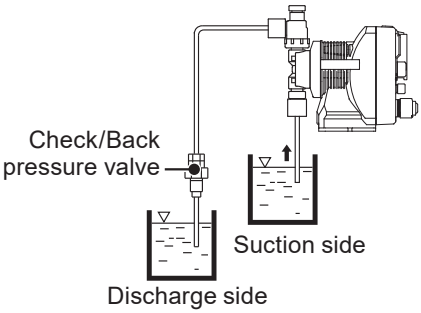

• A suction side liquid level is lower than the discharge side but the height distance is 5 m or below.

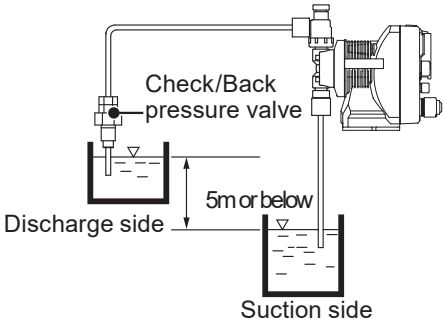

• A suction line pressure is higher than a discharge line pressure.

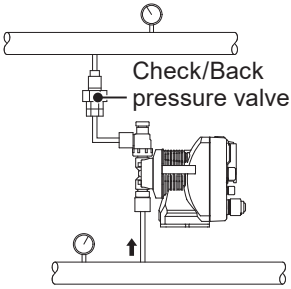

• The back pressure to the pump (including pipe resistance and discharge head) is below 0.13 MPa. (below 0.049 MPa for the EWP-410F/-420F).

1 **Mount an optional check valve at the discharge tube end**

*The CAN check valve has the R½ and R⅜ thread connections as well as an O.D.9 mm tube connection. If required, trim off an amount of the extension tip until it fits your fitting or tee.

NOTE

The maximum allowable tightening torque of the R½ and R⅜ thread connections are 10 N·m. Do not use excessive force when tightening into a pipe.

CAN check valve

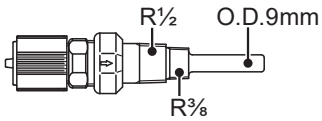

*The CBN check valve (both ends tube connections) and the BVC back pressure valve are optionally available. Contact us or your nearest distributor.

CBN check valve

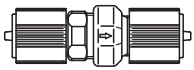

BVC back pressure valve

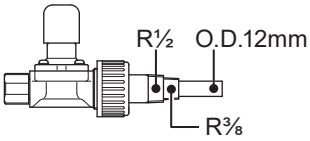

NOTE

- Install a relief valve on a discharge line near the pump so as to automatically release the discharge pressure when it exceeds the maximum level.
- If the set pressure of the check valve plus the injection point pressure to your system is lower than the maximum discharge pressure of the pump, the pump output can exceed the specified point. See page 69 and adjust the output capacity.

Tubing layout (pump with Auto degassing type code)

Flooded suction application

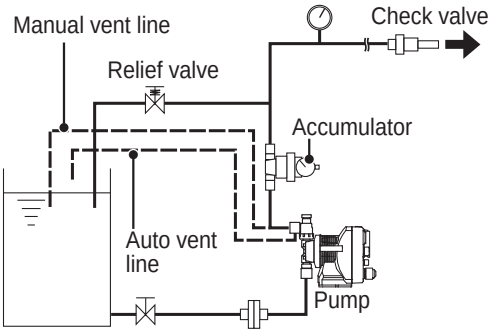

Suction lift application

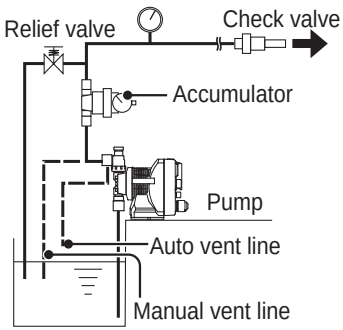

NOTE

*Flooded suction installation is strongly recommended when handling liquids that generate gas bubbles (sodium hypochlorite or hydrazine solution).
*The EWP PC-V/PS-V models require use of a flooded suction installation.
*Install a branched pipe and a relief valve on the discharge line for the prevention of excessive pressure that might be caused by a clogged injection point.
*Ensure that the end of the automatic air vent line is positioned above the liquid level of the supply tank. If the vent line is routed below the liquid level, siphoning may occur.
*When the pump and system are restarted after a long interval, be sure to expel gas from the pump and the suction line manually through the degassing step on page 63.
*When a flooded suction installation is used, keep the suction line as short as possible to ensure proper operation of the automatic degassing system.
An excessively long suction line may trap too much gas, which can exceed the degassing capacity of the pump. However, installing an optional Iwaki DG degassing joint at the pump inlet can help enhance the degassing performance.
*Even after gas is eliminated from the pump, a small amount of liquid is continuously expelled through the air vent path as long as the pump is running (you will see more liquid in siphoning). Be sure to route back the end of the auto air vent line to a supply tank or a container.
*The auto air vent line to a supply tank or a container must be established in the possible shortest distance without any arched line.
*Keep the auto vent line open ended to atmosphere. Do not immerse the tube end in solution in a supply tank.

Wiring

Wiring for a power voltage, earthing and an external signal.

Points to be observed

- Electrical work should be performed by a qualified electrician. Always observe applicable codes or regulations.
- Observe the rated voltage range, or the electrical circuit in the control unit may fail.
- Risk of electrical shock. Be sure to turn off power to stop the pump and related devices before service is performed.
- Risk of electric shock. Replacement of the power cable should be conducted by a manufacturer, his agency or a skilled person.

End terminals

See the following diagram for details.

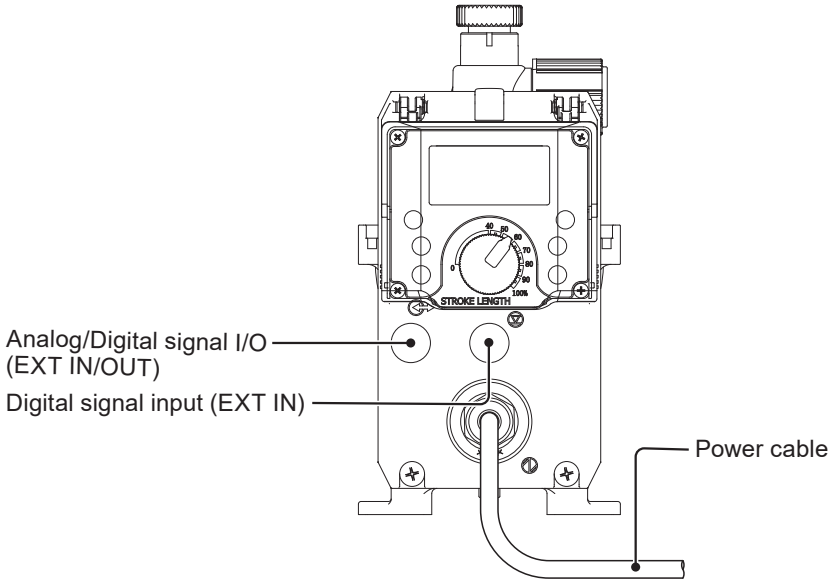

Power voltage/Earthing

Check that the main power is turned off.

■ Pump with the "JA" power plug code

1 **Connect power cable via crimp contacts**

2 **Earth the pump**

Be sure to earth the pump.

■ Pump with the "EU" or "AU" power plug codes

1 **Insert the plug all the way seated in a socket**

This product has two power wires and one earth wire, and is classified as class I.

*This pump is supplied with a grounding-type attachment plug. To reduce the risk of electrical shock, be certain that it is connected only to a properly grounded, grounding type receptacle.

NOTE

- Do not share a power source with a high power device which may generate surge voltage. Otherwise an electronic circuit may fail. The conductive noise caused by an inverter also affects the circuit.
- Energize the pump with a power voltage via a mechanical relay or switch. Do not fluctuate the voltage, or CPU may malfunction. See page 54 for the precautions for ON-OFF control by cycling power.

Apply power sharply

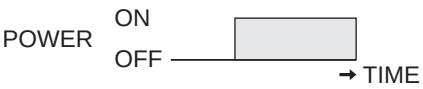

Do not apply gradually



- Use a circuit protector (250VAC, 3A Medium speed) as necessary.
- Do not use a motor thermal relay.

Surge voltage

The electronics within the pump can be damaged by excessive surges in voltage. Do not install the pump near high-power electrical equipment that generates high surge voltages. Avoid branch circuits that also supply power to heavy or other equipment that could generate electrical interference. If necessary,

• install a surge suppression device (such as a varistor with a resistance greater than 2000A)

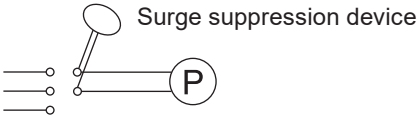

Recommended varistors

Panasonic	ERZV14D431
KOA	NVD14UCD430

See manufacturer's catalogues for details.

• or a noise-reducing transformer at the pump's power connection.

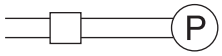

Noise-reducing transformer

Precautions for ON-OFF control by cycling power

The control unit is equipped with a CPU. To ensure the CPU to work properly, always start/stop the pump with the STOP signal for ON-OFF control. Try not to turn on and off the main power. Otherwise, observe the following points:

- Ensure the minimum OFF time of 10 minutes.
- When using a mechanical relay for ON-OFF operation, its contact capacity should be 5A or more. Or a contact point may break.
- If a mechanical relay with the contact capacity of 5A is used, the maximum allowable number of power cycles is limited to 150,000 times. Use the contact capacity of 10A or more when the power cycles exceed that number or when a power source is shared with a large capacity equipment which may cause a surge voltage and damage a contact point.
- Even the large mechanical relay may not last forever. If further longer life is desirable, use a SSR (Solid State Relay) such as the OMRON G3F that does not have a mechanical contact point. Note this product is not designed to be operated with a zero-crossing SSR. See manufacturer's catalogues and make sure a non zero-crossing SSR is selected.

Signal wire connection

Points to be checked

- Check that the main power is turned off.

Applicable cables

Use our optional connector cables below or purchase DIN 5-pin female connector cables when using signal input and output.

Optional DIN connector cables for:

- The EXT IN/OUT signal (or Binder 99-0436-10-05 Series 713)
- The EXT IN signal (or Binder 99-0436-15-05 Series 715)

NOTE

- Do not install these signal cables in parallel with a power cable. Otherwise the electromagnetic induction noise is generated and malfunction or failure may result.
- When using an external SSR for signal input, such a semiconductor relay must be capable of handling the maximum applied voltage from the pump (5V with 2.3mA). Also, its leak current must be 0.1mA or below.
  See specs of the selected SSR. The following SSRs at least meet the requirements:
  - OMRON G3TA-IDZR02S-US or G3TA-IDZR02SM-US
- When using an external mechanical relay for signal input, such a relay must be capable of handling the maximum applied voltage from the pump (5V with 2.3mA). Its minimum application load should be 1mA or less.
- Insert the DIN 5-pin female connector as far as it will go and then tighten the locking collar to make a secure connection.
- Connect the signal cables to external devices which are protected by double or reinforced insulation.

*Use either an external no-voltage contact or an external open collector for the signal line wiring**.**

■ EXT IN/OUT

Wiring diagram

To make the EXT operation, to activate the STOP/P.STOP/I.LOCK/AUX functions, or to output the SPM/ALARM/STATE signal, use the EXT IN/OUT terminal via a DIN 5-pin connector.

- ***When using an analog signal from the 4-20 mA signal generator:***
  Polarity Sensitive. Connect the 4-20mA line to ANA IN (POSITIVE) and COM. The input resistance is 220Ω.
- ***When using an open collector signal from an external device to the pump:***
  An open collector signal is polarity sensitive. Use DIG 1 IN (POSITIVE) and COM (GND).
- ***When using a dry contact signal from an external device to the pump:***
  A dry contact signal is generally not polarity sensitive. Use DIG 1 IN and COM. Use a mechanical relay or a switch designed for electronic circuits. Its minimum applicable load should be 1mA or less.

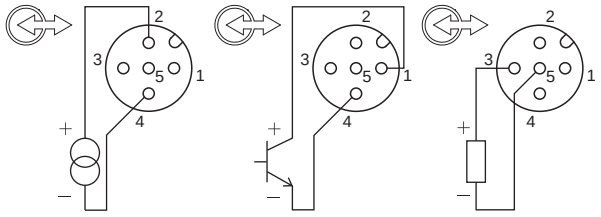

1 : DIG 1 IN + (Brown)
2 : ANA IN + (White)
3 : OUT 1 + (Blue)
4 : COM (Black)
5 : OUT 1 − (Grey)

*The OUT 1 is an open collector output (polarity sensitive) capable of handling the maximum applied voltage of 24 VDC at up to 10 mA from an external device.

Pin assignment

You can set an EXT control or a function corresponding to input/output wirings.

Input	Terminals		EXT controls/functions	Parameters	
	+	–		EXT code	Input/Output
ANA IN	PIN 2 (White)	PIN 4 (Black)	Analog preset control	ANA.P	–
			Analog variable control	ANA.V	–
DIG 1 IN	PIN 1 (Brown)	PIN 4 (Black)	Pulse variable control	PLS.V*	PULSE
			Pulse divisor control	DIV*	
			Pulse multiplier control	MULTI*	
			Batch control	BATCH*	
			Interval batch control	INT.B*	
			STOP function	–	STOP
			PreSTOP function	–	P.STOP
			AUX function	–	AUX
			Interlock function	–	I.LOCK
OUT 1	PIN 3 (Blue)	PIN 5 (Grey)	spm synchronous output	–	SPM
			Alarm output	–	ALARM
			Pump state output	–	STATE

*If the PLS.V, DIV, MULTI, BATCH, or INT.B control mode is selected over the EXT type, the DIGI.1 input is automatically configured as PULSE, regardless of the input option selected.

■ EXT IN

Wiring diagram

To activate the STOP/P.STOP/I.LOCK/AUX functions, select the EXT IN terminal via a DIN 5-pin connector.

- ***When using an open collector signal from an external device to the pump:***
  An open collector signal is polarity sensitive. Use DIG 2 (or 3) IN (POSITIVE) and COM (GND).
- ***When using a dry contact signal from an external device to the pump:***
  A dry contact is generally not polarity sensitive. Use DIG 2 (or 3) IN and COM. Use a mechanical relay or a switch designed for electronic circuits. Its minimum applicable load should be 1mA or less.

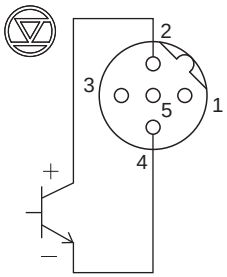

DIG 2 IN

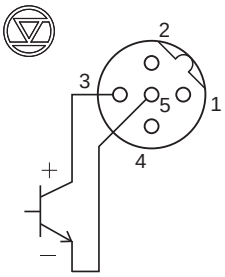

DIG 3 IN

1 : 12 VDC + (Brown)
2 : DIG 2 IN + (White)
3 : DIG 3 IN + (Blue)
4 : COM (Black)
5 : COM (Grey)

*Sensor Power: The control circuit of the EWP series has the ability to provide 12 VDC at up to 2.3 mA to power a Hall effect sensor or similar device. Connect the sensor power leads to terminal 1 (POSITIVE) and terminal 4 or 5 (NEGATIVE).

Pin assignment

You can set an EXT control or a function corresponding to input wirings. Select the DIG 2 or DIG 3 in the input-selection menu.

Input	Terminals		EXT functions	Parameters	
	+	–		EXT code	Input
DIG 2 IN or DIG 3 IN	PIN 2 (White) or PIN 3 (Blue)	PIN 4 (Black) or PIN 5 (Grey)	STOP function	–	STOP
			PreSTOP function	–	P.STOP
			AUX function	–	AUX
			Interlock function	–	I.LOCK

*Always use PIN 2 and PIN 4 when using DIG 2 IN, and PIN 3 and PIN 5 when using DIG 3 IN.

FCP/FCM mounting (purchase separately)

For details, refer to the instruction manuals for the FCP flow counter and FCM flow checker.

■ **Flow counter (FCP)**

1 **Remove the adjusting screw**

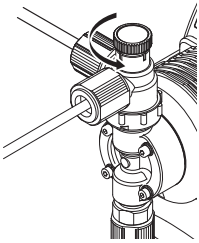

2 **Tighten the FCP flow counter into the pump head by hand**

DO NOT use excessive force or large wrenches.

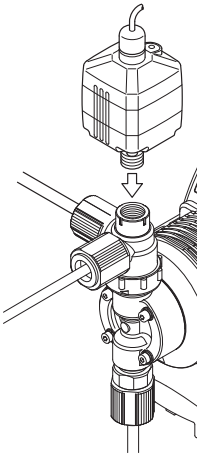

■ **Flow checker (FCM)**

1 **Remove the fitting, and take out the valve set from the pump head**

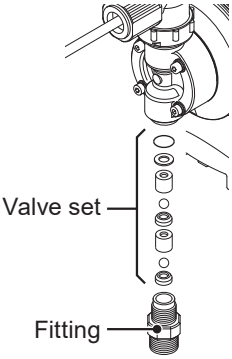

2 **Insert the valve set into the air vent body B, then screw the air vent body B into the pump head by hand, with the lock nut in place**

Use a 17 mm socket wrench to tighten the air vent body B an additional 90°.

NOTE

The air vent valve set has a specified mounting direction.

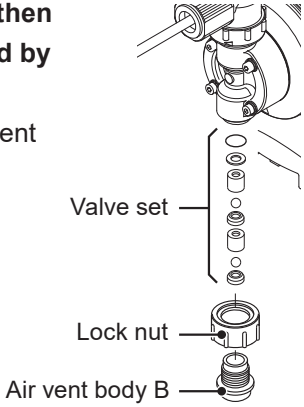

3 **Connect the flow checker body to the pump head, then tighten the lock nut by hand to secure it**

Take care not to drop the O ring, Float, or Plate. Note that the Float has a mounting direction. Install the float with a red-marked face upwards.

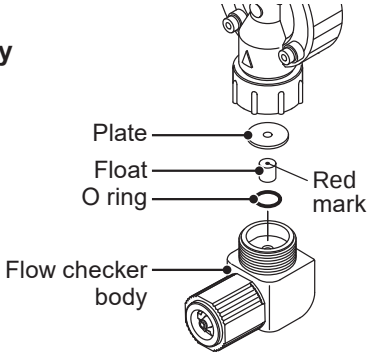

■ FCP/FCM wiring

Wiring diagram

To activate the FL.CHK function, select the EXT IN terminal via a DIN 5-pin connector. Follow the wiring diagram below.

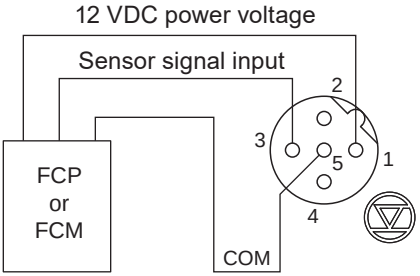

DIG 3 IN

1 : 12 VDC+ (Brown)
2 : DIG 2 IN+ (White)
3 : DIG 3 IN+ (Blue)
4 : COM (Black)
5 : COM (Grey)

Pin assignment

Select the DIG 3 in the input-selection menu.

Input	Terminals		FCP/FCM input	Parameters
	+	–		
DIG 3 IN	PIN 3 (Blue)	PIN 5 (Grey)	Flow monitoring function	FL.CHK

Operation

This section describes pump operation and programming.
Run the pump after pipework and wiring are completed.

Before operation

First check tubing and wiring are correct. And then perform degassing and flow rate adjustment before starting operation.

Points to be checked

Before operation, check if:

- Liquid level in a supply tank is enough.
- Tubing is securely connected and is free from leakage and clogging.
- Discharge/suction valves are opened.
- A power voltage is in the allowable range.
- Electrical wiring is correct and is free from the risk of short circuit and electrical leakage.

Retightening of head bolts

Important

Head bolts may loosen when plastic parts creep due to temperature change in storage or in transit. This could lead to a chemical leak. Tighten the screws diagonally and evenly by the rated torque at each model before initial operation and at regular intervals (every three months).

Tightening torque

Pump unit	Torque	Bolts
EWP-A/-B/-C/-D	2.16 N•m	M4 hex. socket head bolt
EWP-E	2.55 N•m	M4 hex. socket head bolt
EWP-E-V	2.16 N•m	M4 hex. socket head bolt
EWP-F	2.55 N•m	M5 hex. socket head bolt

■ **Use of hex wrench instead of a torque wrench**

1 **Fasten the four head bolts as tight as can be with the straight long part of a hexagon wrench**

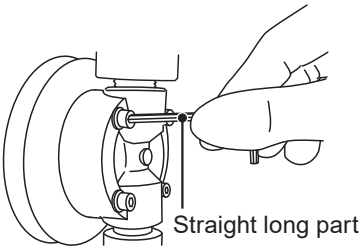

2 **Further turn the head bolts clockwise 90° with the short part**

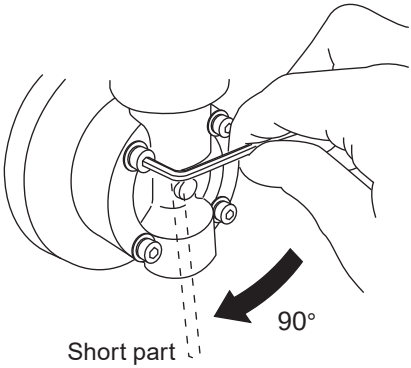

Degassing

The gas in the pump and tubing is the obstacle to liquid delivery and needs to be expelled before the pump is started. Especially:

- When the pump starts to run for the first time
- When a flow rate is too low
- After liquid is replaced in a supply tank
- After a long period of stoppage
- After maintenance and inspection are performed

NOTE

- Both gas and chemical come out together through an air bleed tube. Make sure the end of the tube is located in a supply tank or a container.
- Some chemicals are harmful or attack non-wetted parts. Wash/wipe chemicals off immediately if getting wet.

■ EWP VC/VS/VE/PC/PS/PE/TC/SH with the MAN air vent port

Points to be checked

- An air bleed tube is connected to the pump.

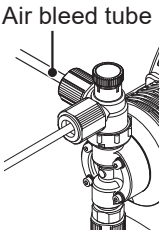

1 **Turn on power**

The status LED lights up, the display momentarily shows the software version, and the controller goes to whatever mode the pump was in when power was disconnected.

*If being powered for the first time, the pump is in the MAN/EXT selection mode.

MAN/EXT selection mode



2 **Run the pump at the maximum stroke rate**

Choose one from the following three methods.

Method 1: Set/Run the full MAN speed. See pages 71 and 79 as well.

*If the pump boots up in the EXT mode, use the ⟲ key to get back to the MAN/EXT selection mode and choose the MAN mode.

MAN WAIT mode
(white status LED lights)



Pump runs at MAN speed
(green status LED blinks)



Method 2: Enter the external signal via the AUX terminal. See page 82.

*The pump runs at the AUX speed that is user settable. See page 112.

MAN RUN mode only
(green status LED blinks)



AUX signal

Pump runs at AUX speed
(green status LED blinks)



Method 3: Press and hold the ⏻ key for more than 3 second. See page 82 for the Priming function section.

MAN WAIT mode
(white status LED lights)



3 sec

Pump runs at Priming speed
(green status LED blinks)



3 **Rotate the adjusting screw two revolutions counterclockwise to open the air vent port**

*Do not rotate it three revolutions. Otherwise, the adjusting screw may come off with solution spray.

Adjusting screw

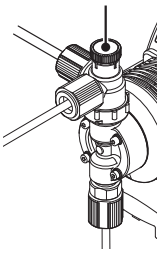

4 **Keep the pump running for more than ten minutes for degassing**

5 **Stop the pump by:**

- pushing the ⏻ key once (if it's 100% MAN run mode),
- stopping the AUX signal (if it's AUX mode), or
- releasing the ⏻ key (if it's priming mode).

6 **Rotate the adjusting screw clockwise to close the air vent port**

7 **Check liquid is delivered to the discharge line**

Degassing must be repeated until liquid is outputted from the pump outlet.

8 **Check connections for leakage**

Degassing has now been completed.

■ EWP FC with no MAN air vent port

No air vent port is provided to the pump with the FC wet end code. Branch the main flow line (discharge side) to establish an open-ended air vent line.

1 **Establish an air vent line to your system**

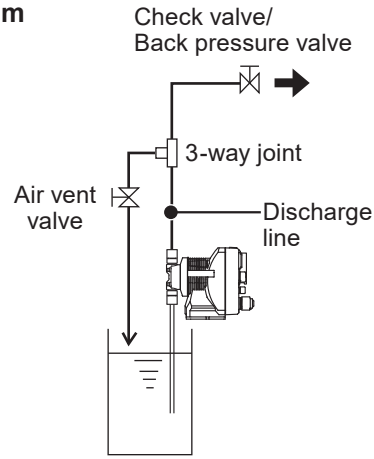

2 **Turn on power**

The status LED lights up, the display momentarily shows the software version, and the controller goes to whatever mode the pump was in when power was disconnected.

*If being powered for the first time, the pump is in the MAN/EXT selection mode.

MAN/EXT selection mode



3 **Open the air vent valve and run the pump at the maximum stroke rate**

Choose one from the following three methods.

Method 1: Set/Run the MAN speed 100%. See pages 71 and 79 as well.

*If the pump boots up in the EXT mode, use the ⮌ key to get back to the MAN/EXT selection mode and choose the MAN mode.

MAN WAIT mode
(white status LED lights)



Pump runs at MAN speed
(green status LED blinks)



Method 2: Enter the external signal via the AUX terminal. See page 82.

*The pump runs at the AUX max speed. See page 112 as well.

MAN RUN mode only
(green status LED blinks)



AUX signal

Pump runs at AUX speed
(green status LED blinks)



Method 3: Press and hold the ⏻ key for more than 3 seconds. See page 82 for the Priming function section.

MAN WAIT mode
(white status LED lights)



3 sec

Pump runs at Priming speed
(green status LED blinks)



Operation

4 **Keep the pump running for more than ten minutes for degassing**

5 **Stop the pump by:**

- pushing the ⏻ key once (if it's 100% MAN run mode),
- stopping the AUX signal (if it's AUX mode), or
- releasing the ⏻ key (if it's priming mode).

6 **Close the air vent valve**

7 **Check liquid is delivered to the discharge line**

Degassing must be repeated until liquid is outputted from the pump outlet.

8 **Check connections for leakage**

Degassing has now been completed.

Flow rate adjustment

The flow rate can be adjusted by modulating a stroke rate and stroke length. The stroke rate represents the pump speed in %. The stroke rate adjustment is the main way to adjust the flow rate from the pump.
The stroke length represents the moving distance of the shaft. The widest moving distance is defined as 100% stroke length. The stroke length adjustment is used for determining the optimal volume pumped per stroke (fine adjustment of the pump flow).
First adjust the flow rate with the stroke rate adjustment. Use stroke length adjustment for the range where the stroke rate adjustment can not reach.
Note the optimal stroke length changes with operating conditions and liquid characteristics.

The following procedure is recommended.

1 **With the stroke length 100%, adjust the stroke rate to meet the desired output**

See the "Stroke rate adjustment" section (page 71) and the "Stroke length adjustment" section (page 72) for details.

2 **Measure the pump output**

3 **If the measured output is lower/higher than the desired level, increase/decrease strokes and measure the pump output again**

4 **Adjust the stroke length for fine adjustment**

5 **Measure the output again to see if the desired output is obtained**

Flow rate, stroke rate and stroke length

EWP-A

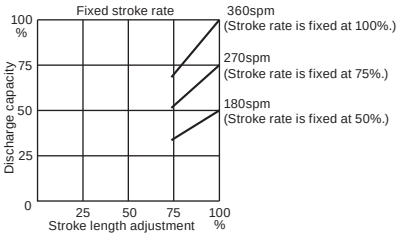

EWP-B

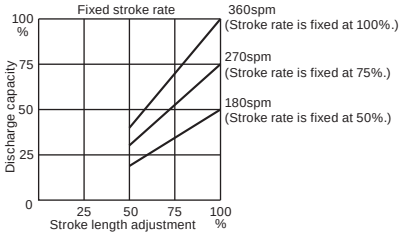

EWP-C/-D/-E/-F

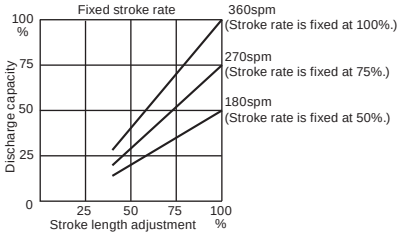

NOTE

- When back pressure is high, set the stroke length to 100% and adjust the pump flow by modulating the stroke rate.
- When each dose greatly affects a chemical reaction in neutralization or titration application, shorten the stroke length to reduce the volume pumped per stroke. And then tune the stroke rate to finalize.
- When handling liquids that readily generate gas bubbles (sodium hypochlorite or hydrazine solution), set the stroke length to 100% and adjust the pump flow by modulating the stroke rate. Note air lock may occur when the stroke length is set too short.

■ Stroke rate adjustment

The stroke rate can be set by keypad operation from 0.1 to 100.0%.

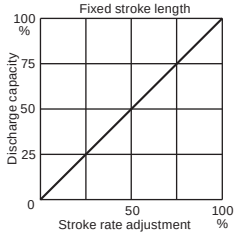

*The nameplate shows the maximum (100%) output with the full stroke rate and length.

1 Turn on power and select the MAN mode

Use the ↵ key to select the % unit.

*If the pump is turned on with the EXT mode, use the ↩ key to return to the MAN/EXT selection mode.

*When either the "STOP", "P.STOP", or "I.LOCK" display appears on the screen, see page 99 and deactivate that input signal.

2 Use the ▲ or ▼ key to adjust the stroke rate

The stroke rate can be changed by pressing the ▲ and ▼ keys in either the MAN WAIT mode or MAN RUN mode. Press the ▲ to increase the stroke rate and the ▼ key to decrease the rate. Holding the keys down briefly will change the rate slowly, but holding them down for 5 seconds will change the rate rapidly.

3 Push the ⏻ key to run the pump at the stroke rate

The status LED blinks at each stroke during operation.

■ Stroke length adjustment

The stroke length can be adjusted when the moving distance of the shaft is changed with the stroke length adjusting knob.

Model	Allowable range
EWP-A	70-100%
EWP-B	50-100%
EWP-C/-D/-E/-F	40-100%

EWP-A

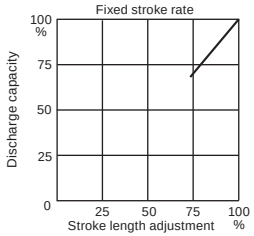

EWP-B

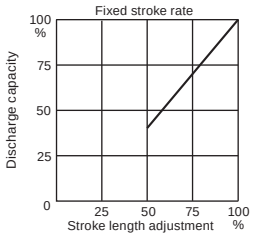

EWP-C/-D/-E/-F

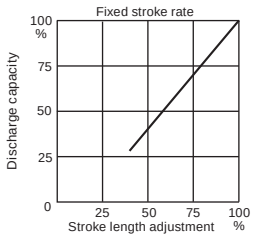

NOTE

- Do not rotate the stroke length adjusting knob when the pump is not running.
- Do not set the stroke length out of the allowable range where the output capacity is not assured.

1 Turn on power and push the ⏻ key to run the pump

The status LED blinks during operation.

MAN WAIT mode



Pump runs at MAN speed (green status LED blinks)



2 Rotate the stroke length knob to determine liquid volume per stroke

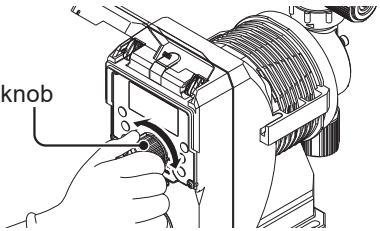

Perform a calibration

Calibrate the pump in your plumbing system with an actual chemical liquid after the flow rate adjustment is done, so that the pump can be operated using a theoretical output capacity. Use a reliable flow meter to measure the flow volume. The pump divides the measured flow volume by strokes to determine the flow volume per stroke. See page 98 for the calibration menu flow.

NOTE

- To obtain the best calibration accuracy, it is recommended to perform calibration at the maximum SPM set in Manual mode (MAN speed).
- The pump calculates and displays the current flow rate based on the volume per stroke obtained during the calibration process. After calibration, the following parameters are reset to their default settings. Be sure to configure the required parameters before operating the pump. For default values, refer to the Default setting and Setting range table on page 75.
  - MAN speed
  - AVA.V, PLS.V, BATCH, INT.B
  - Upper limit (MAX), Auxiliary rate (AUX)

1 **Push the ☰ key**

MAN/EXT selection mode



Menu mode



2 **Push the ▼ key once to select the CALIB option**





3 **Push the ↵ key once to confirm the selection**

A countdown time shows up.

4 **Push the ↵ key once again to run the pump**

Measure the output capacity from the pump with an reliable flow meter

The pump stops when the countdown is finished.

Countdown time

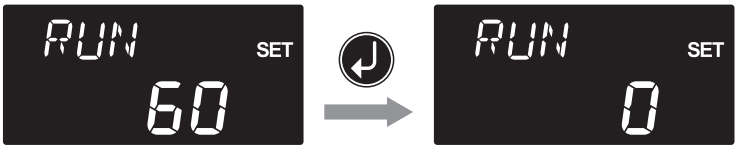

5 **Enter the measured output capacity**

Use the ☰ key to move between digits, the ▲ and ▼ keys to change and the ↵ key to confirm the value.

*The ↩ key get back to the CALIB option menu if you don't want to save the new value.

Enter the new value

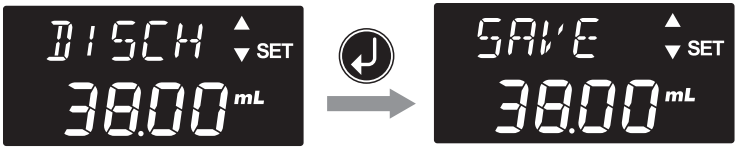

Before a long period of stoppage (one month or more)

Clean wet ends and the inside of tubing:

• Run the pump with clean water for about 30 minutes to rinse chemicals off from the pump head and piping.

Before unplugging the pump:

• Always stop the pump by key operation and wait for three seconds before unplugging the pump. Otherwise, the last key operation may not be put in memory. In this case the pump unintentionally starts to run as powered on, discharging liquid.

When the pump does not transfer liquid:

• Clean the valve sets and remove foreign matters.

• If gas is in the pump head, expel gas and readjust the output capacity. See the "Degassing" section on page 63 and the "Flow rate adjustment" section on page 69 for details.

Operation programming

Operation at each mode is individually set and controlled by keypad operation. Select a proper mode to make optimal operation.

Default setting and Setting range

Control mode	Parameters		Default settings	Setting ranges	STEP
Operation	–		MAN	MAN/EXT	–
	Unit		%	%, spm, mL/m, L/h, GPH	–
MAN RUN/ WAIT	Number of strokes	%	100.0	0.1-100.0%	0.1*2
		spm	360*1	1-360spm*1	1*2
	Theoretical capacity*5	mL/m	38.01*1	0.01-MAX mL/m*4	0.01*2
		L/h	2.280*1	0.001-MAX L/h*4	0.001*2
		GPH	0.6004*1	0.001-MAX GPH*4	0.001*2
EXT (EXTYP)	Analogue rigid (ANA.P)		4-20	4-20, 0-20, 20-4, 20-0	–
	Analogue variable (ANA.V)	SP1 (1.mA)	4.0	0.0-20.0mA	0.1*2
		SP1 (1.FL)	0.0%	0.0-100.0%*4, 5	0.1*2
		SP2 (2.mA)	20.0	0.0-20.0mA	0.1*2
		SP2 (2.FL)	100.0%	0.0-100.0%*4, 5	0.1*2
		Patterns (CURVE)	LINE	LINE, BOX, LIMIT	–
	Pulse variable (PLS.V)	Max range (RANGE)	100	100/500Hz	–
		SP1 (1.Hz)	0Hz	0-100 or 0-500Hz	1*2
		SP1 (1.FL)	0.0%	0.0-100.0%*4, 5	0.1*2
		SP 2 (2.Hz)	100Hz	0-100 or 0-500Hz	1*2
		SP2 (2.FL)	100.0%	0.0-100.0%*4, 5	0.1*2
		Patterns (CURVE)	LINE	LINE,BOX,LIMIT	–
	Divisor (DIV)		1	1-9999	1*2
	Multiplier (MULTI)		1	1-9999	1*2
	Batch control (BATCH)	Capacity (BATCH)	100.0mL 0.0263gal	0.1mL-99.9999L or 0.0001-26.4199gal	–
	Interval batch control (INT.B)	Day (DAY)	0	0-9	1*3
		Hour (HOUR)	0	0-23	1*3
		Minute (MIN)	1	0-59	1*2
		Capacity (FLOW)	100.0mL 0.0263gal	0.1mL-99.9999L or 0.0001-26.4199gal	–

Control mode	Parameters		Default settings	Setting ranges	STEP
Input (INPUT)	Digital input 1 (DIGI.1)		PULSE	PULSE, STOP, P.STOP, I.LOCK, AUX, OFF	–
	Digital input 1 (DIGI.2)		OFF	STOP, P.STOP, I.LOCK, AUX, OFF	–
	Digital input 1 (DIGI.3)		OFF	STOP, P.STOP, I.LOCK, AUX, OFF	–
Output 1 (OUT1)	Trigger (TRIG)		ALARM	OFF, SPM, ALARM, STATE	–
	Alarm (AL.SET)	STOP signal (STOP)	on	on, oFF	–
		PreSTOP signal (P.STOP)	oFF	on, oFF	–
		INTERLOCK setting (I.LOCK)	oFF	on, oFF	–
		Batch complete (B.COMP)	oFF	on, oFF	–
F.CHK(FCP/FCM setting)			A MODE	A.MODE/B.MODE/ C.MODE/D.MODE	–
	A.MODE	FC.NUM (Number of empty strokes)	1	1 - 60 strokes	
	B.MODE/ C.MODE	FC.NUM (Number of empty strokes)	1	1 - 60 strokes	
		FC.POF (Empty strokes to P-OFF)	1	1 - 60 strokes	
	D.MODE	FC.TIM (Detection time)	1	1 min - 60 min	
		FC.PRM (Priming time)	1	1 min - 60 min	
		FC.RTN (Return time)	1:00	1 sec - 60 min	
Logging (LOG)	Total capacity (T.VOL)		0	–	–
	Total strokes (SHOT.C)		0×(1K)	–	–
	OUT1 ON times (OUT1.C)		0	–	–
	Total power-on time (PW.ON.T)		0	–	–
	Total operation time (OPER.T)		0	–	–

Control mode	Parameters		Default settings	Setting ranges	STEP
Others (OTHER)	Max pump speed (RATE)	Upper limit (MAX)	100.0%	0.3-100.0%	0.1*2
		Auxiliary rate(AUX)	100.0%	0.3-100.0%	0.1*2
	Buffer memory (bF.MEM)		oFF	on, oFF	–
	Anti-chattering (ANTI.C)		5	3,5,20,50	–
	Logic (LOGIC)	Digital input 1 (DIGI.1)	n.o	n.o, n.c	–
		Digital input 2 (DIGI.2)	n.o	n.o, n.c	–
		Digital input 3 (DIGI.3)	n.o	n.o, n.c	–
		Digital output 1 (OUT 1)	CL	CL, oP	–
	Flow unit (UNIT)	mL/m	on	on, oFF	–
		L/h	on	on, oFF	–
		GPH	on	on, oFF	–
	PIN number to unlock keypads (CODE)		0000	0000-9999	1*3
	Backlight LED ON time (b.LCD)		on	on/1-10	1*3

*1 The output capacity is of the EWP-038B and this value changes with pump model.
*2 The parameter increases/decreases step by step every time the up or down key is pushed. Press and hold either key 5 seconds for quick change.
*3 The parameter increases/decreases step by step every time the up or down key is pushed. The quick change does not happen.
*4 The upper limit of programmable values is defined by the calibration results.
*5 The settings can also be done by the spm, L/h, mL/m or GPH.
*6 The value of the lowest place after the decimal point may change due to arithmetic processing.

Programming flow

First set up the menu mode parameters so the pump runs as you desire. Select the MAN or EXT mode and run the pump as programmed.

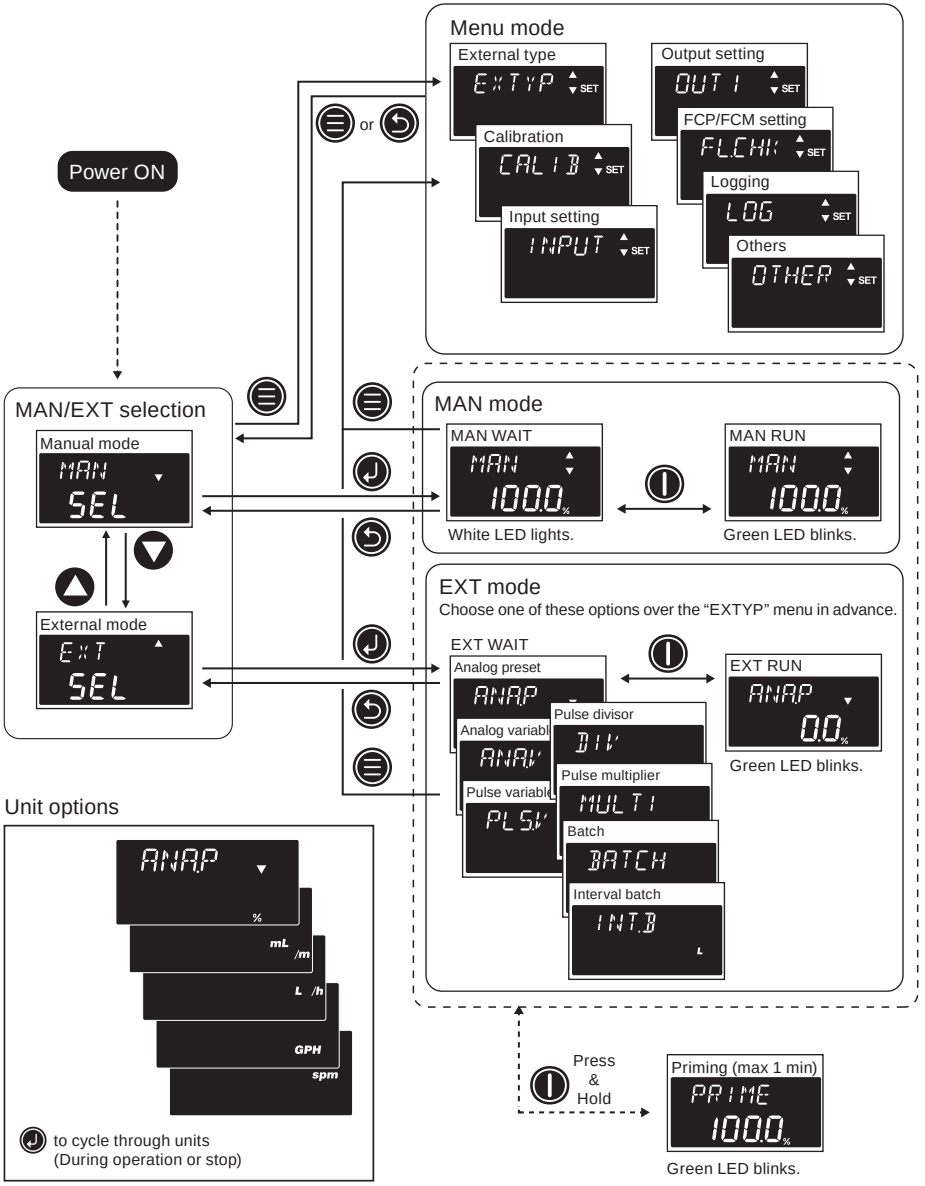

Manual operation

Run or stop the pump with keypad operation.

1 **Turn on power**

The status LED lights up, the display momentarily shows the software version, and the controller goes to whatever mode the pump was in when power was disconnected.

*If being powered for the first time, the pump is in the MAN/EXT selection mode.

The mode currently selected



2 **Push the ⏎ key to enter the MAN/EXT selection mode**

If the pump is running in the MAN/EXT RUN mode, push the ⏻ key to stop the pump in the MAN/EXT selection mode in advance.

The mode currently selected



MAN/EXT selection mode



3 **Push the ▲ keys to select the MAN mode and then the ↵ key**

In the MAN mode, you can adjust the output capacity with the ▲ and ▼ keys during operation or stop.

MAN/EXT selection mode



MAN selected



MAN mode (MAN WAIT)



↵ key to change units.

Operation

4 **Push the ⏻ key**

The green LED blinks with every stroke during operation.

*With the ↵ key, you can cycle through the flow unit during operation or stop.

EXT operation

The pump operation is controlled by the external signal. First, see page 56 or 57 to hardwire the EXT IN/OUT or EXT IN terminals with your device (e.g. an analog signal generator or a pulse signal generator). And then select the ANA.P, ANA.V, PLS.V, DIV, MULTI, BATCH, or INT.B option over the "EXTYP" menu (page 86). Also see page 22 for how the pump should run corresponding to the external signal.

■ EXT control mode

Set the upper limit spm (MAN speed) and enter EXT mode (except ANA.P/ ANA.V/PLS.V). Note that the pump may start to run as entering EXT RUN mode corresponding to the external signal.

1 **Turn on power**

The status LED lights up, the display momentarily shows the software version, and the controller goes to whatever mode the pump was in when power was disconnected.

*If being powered for the first time, the pump is in the MAN/EXT selection mode.

The mode currently selected



2 **Push the ⑤ key to enter the MAN/EXT selection mode**

If the pump is running in an EXT RUN mode, push the ① key to stop the pump and ⑤ to move back to the MAN/EXT selection mode.

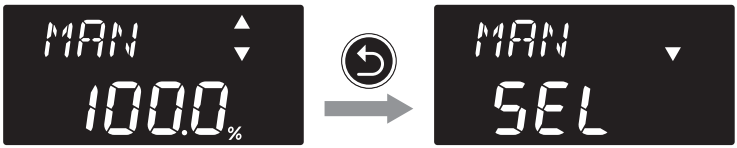

3 **Push the ▼ key to select the EXT mode and then the ↵ key**

The pump enters the EXT WAIT mode.

*See page 86 for the EXT mode setting flow chart as well.

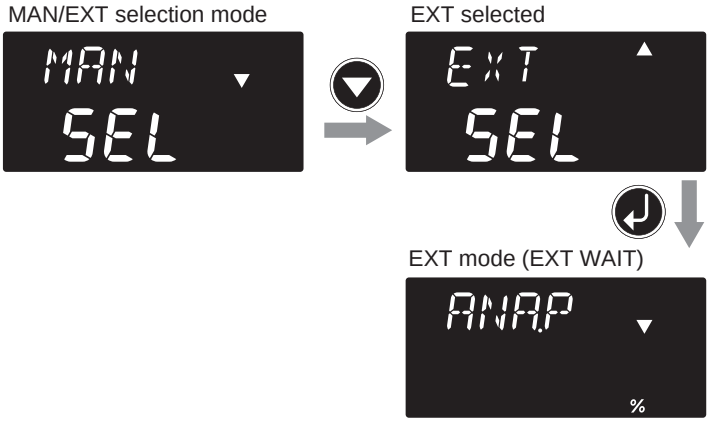

4 **Push the ① key to enter the EXT RUN mode**

The pump is ready to run with the external analog/pulse signal or the ↵ key (BATCH or INT.B). The green LED bar blinks with every stroke during operation.

*Push the ① key to move back to the EXT WAIT mode.

*When the pump is in the ANA.P mode or the ANA.V mode, you can see the amps from the external device with the ▼ key. Get back to the flow unit with the ▲ key.

AUX function

The pump in the MAN RUN mode or the EXT RUN mode operates at the AUX speed while receiving the external signal via the AUX terminal. See page 112. Use this function to prime the pump or to remove entrained air in operation.

*Once the AUX signal is stopped, the mode returns to the MAN speed or continues the programmed EXT mode.

Priming function

This key operation runs the pump at the maximum stroke rate in operation.

1 **Press and hold the ⏻ key more than 3 seconds**

The pump runs at the maximum stroke rate while key is pressed in the MAN mode or EXT mode. This function stops automatically in one minute.

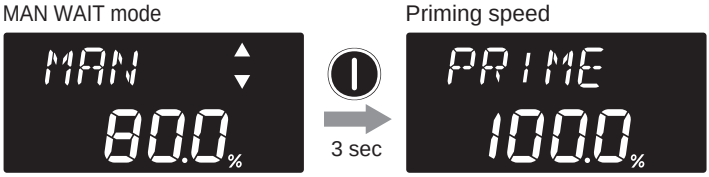

Keypad lock

Keypad lock can be active for the prevention of erroneous key operation. The pin code to release the locked keypad is "0000" when shipped from our factory. See page 117 and change the PIN code to your own number.

■ Keypad lock activation

1 **Press and hold the ☰ key for 3 seconds**

The 🔒 icon appears on the screen in the MAN mode or EXT mode.

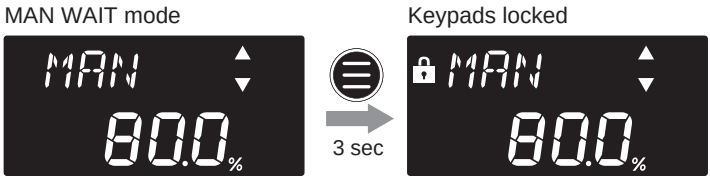

■ Keypad lock release

1 **Push the ⏎ key to move the PIN code entry screen**

Keypads are locked



PIN code entry screen



2 **Enter your PIN number**

Use the ☰ key to move between digits and ▲ and ▼ keys to change the numeric value.

*The default PIN number is "0000".

3 **Push the ⏎ key**

The "PASS" will appear to unlock keypads.

*If the pin number is not correct, "FAIL" will be shown and the lock state will continue.

PIN code entry screen



PASS



■ Emergency stop with keypads locked

1 **Press and hold the ⏻ key for 3 seconds**

The pump enters the WAIT mode and stops running with keypad locked. To run the pump again, you will need to enter your PIN code and unlock the keypads.

Unit change

The stroke rate of the pump is shown in % with the factory default setting. Use the key to cycle through the flow unit from % to spm, mL/min, L/h, or GPH based on your application.

■ Stroke rate unit

% indication



Stroke rate shown in between 0.1 and 100.0%.

spm indication



Stroke rate per minute

■ Flow rate unit

The following flow units are available. See page 73 and perform a calibration in advance.

mL/m indication



Output capacity in millilitre per minute

L/h indication



Output capacity in litre per hour

GPH indication



Output capacity in gallon per hour

Menu mode

Enter the ☰ key to set up the pump. Use the ↩ key to return to the MAN/EXT selection mode to start the operation afterward.

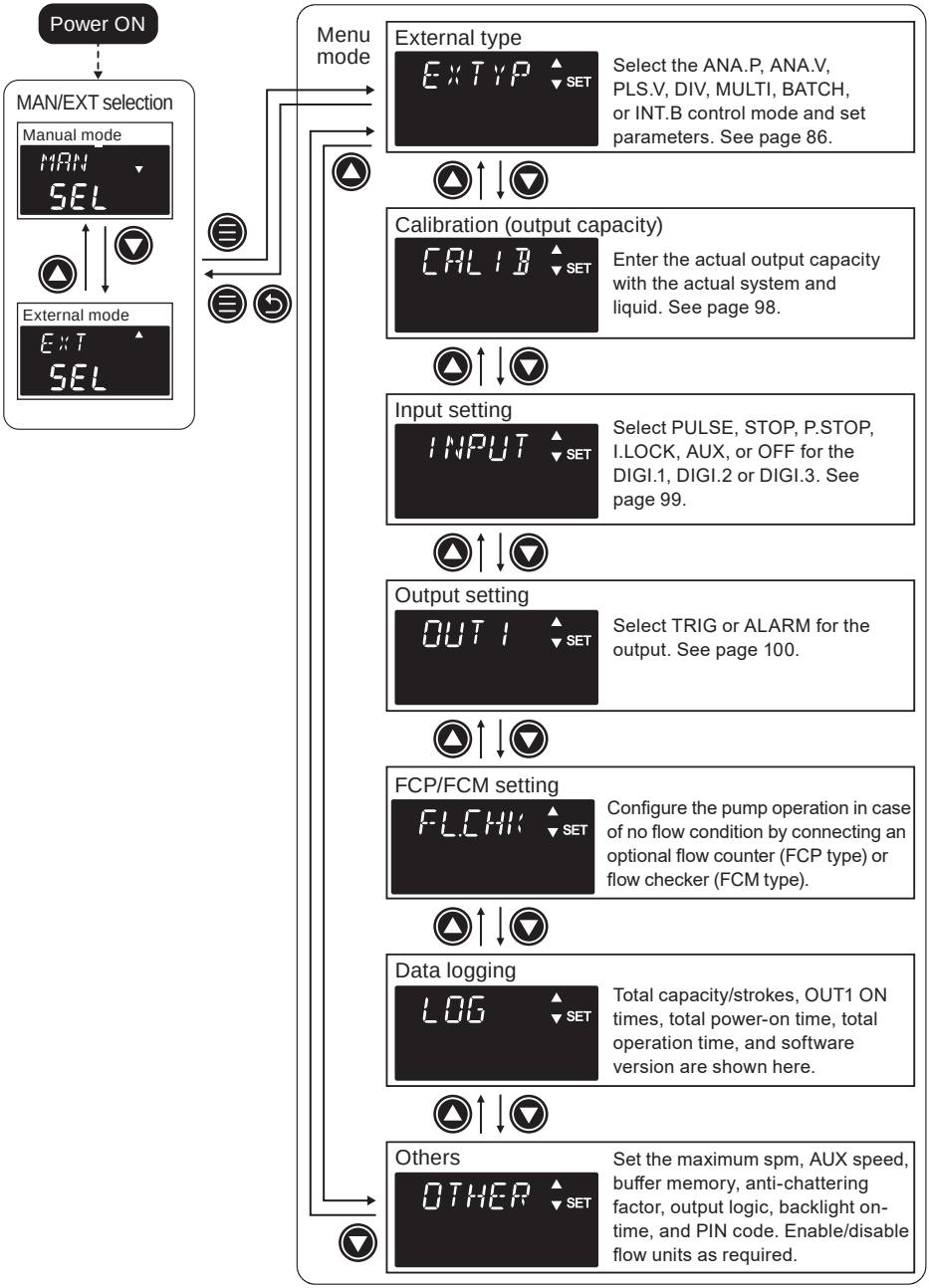

EXT mode setting

■ Flow chart

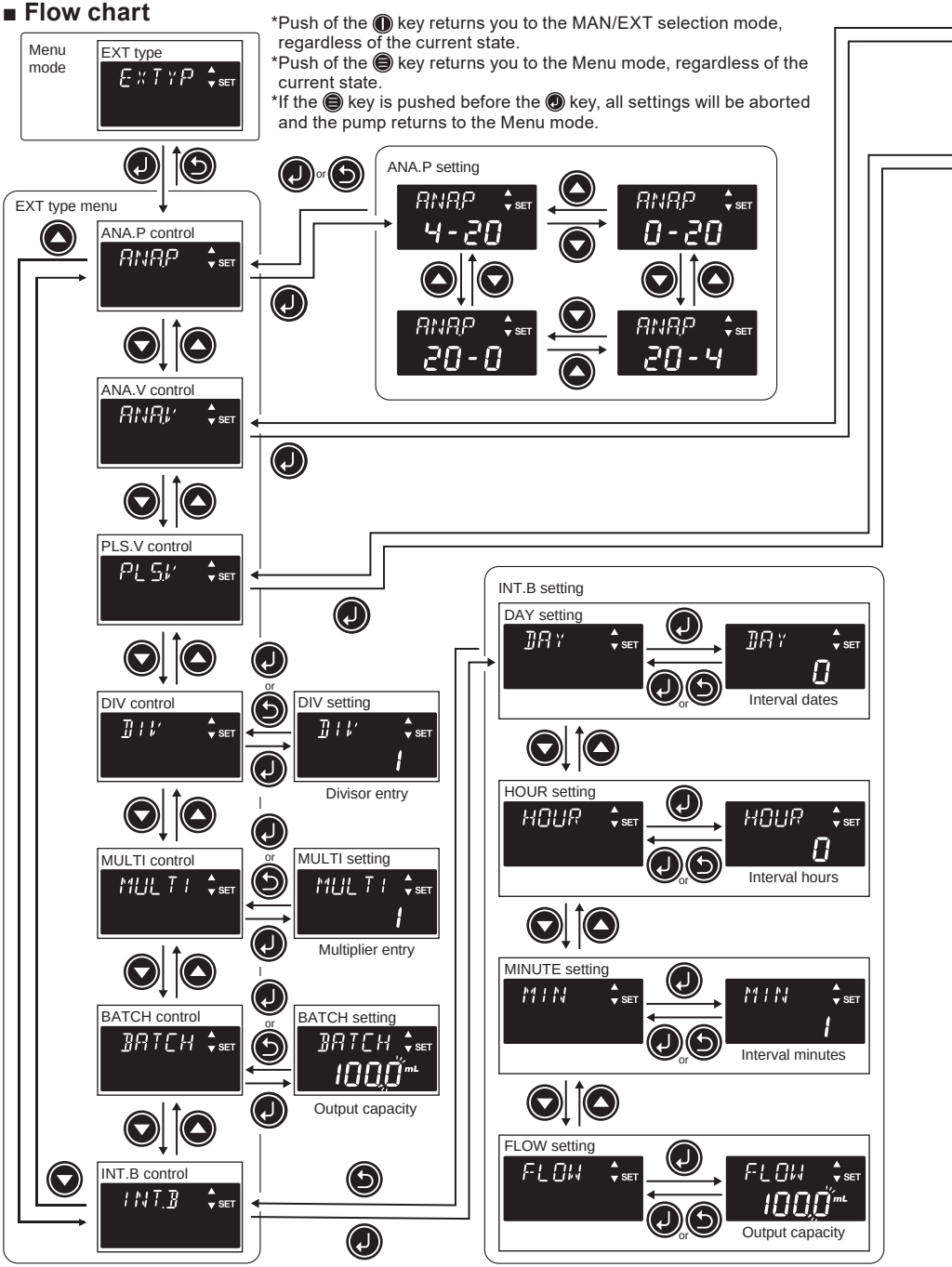

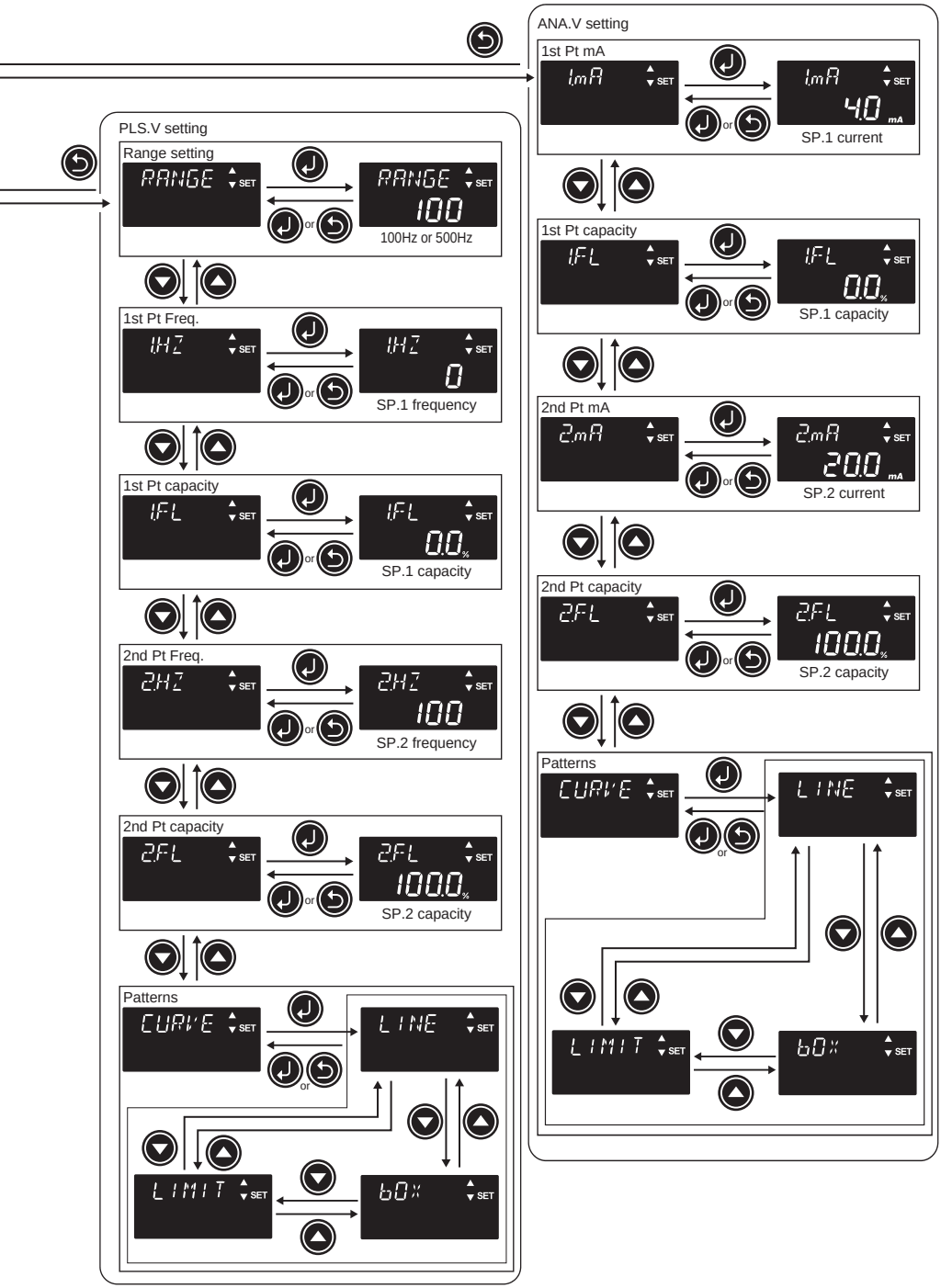
PLS.V setting
Range setting
RANGE
RANGE
100
100Hz or 500Hz
1st Pt Freq.
1HZ
1HZ
0
SP.1 frequency
1st Pt capacity
1FL
1FL
0.0
SP.1 capacity
2nd Pt Freq.
2HZ
2HZ
100
SP.2 frequency
2nd Pt capacity
2FL
2FL
100.0
SP.2 capacity
Patterns
CURVE
LINE
LIMIT
60%
ANA.V setting
1st Pt mA
1mA
1mA
4.0
mA
SP.1 current
1st Pt capacity
1FL
1FL
0.0
SP.1 capacity
2nd Pt mA
2mA
2mA
20.0
mA
SP.2 current
2nd Pt capacity
2FL
2FL
100.0
SP.2 capacity
Patterns
CURVE
LINE
LIMIT
60%
SET
or

■ EXT mode setting

Select the control mode from the ANA.P, ANA.V, PLS.V, DIV, MULTI, BATCH, and INT.B, options.

NOTE

- Settings will not be entered unless the ↵ key is pushed for confirmation. Note if the ↩, ☰, or ▲ key is pushed before the ↵ key, your setting will be aborted.
- When 500 Hz is selected in the “RANGE” setting of “PLS.V,” the chattering suppression setting is disabled. To enable the chattering suppression setting, make sure that the “RANGE” setting is set to 100 Hz.

ANA.P (Analog preset)

1 **Enter the menu mode and select the EXTYP option**

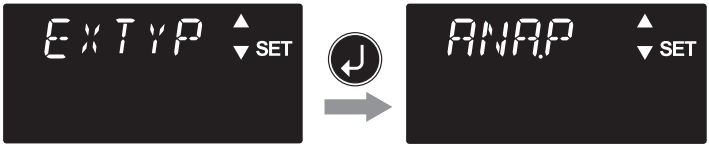

2 **Choose the ANA.P option**

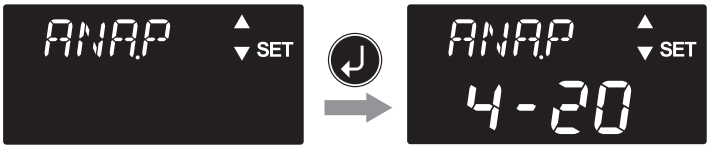

3 **Select a proportional control pattern**

Push the ↵ key to confirm your option. See page 22 for the behaviour of each pattern.

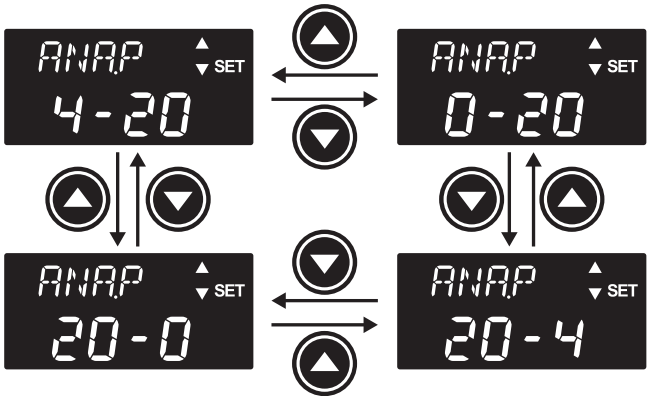

4 **Push the ☰ key that brings you back to the Menu mode**

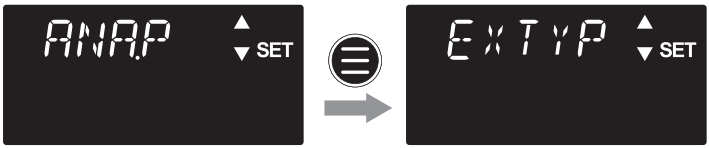

ANA.V (Analog variable)

If you want to use the different flow unit than "%", select the desired flow unit in advance over the MAN WAIT mode or the EXT WAIT mode. Note that the calibration must be performed before selecting the flow unit.

Enter a different value to the setpoint 1 and setpoint 2. If the same value is entered, the display will blink for a few seconds and return to the previous value.

1 **Enter the menu mode and select the EXTYP option**

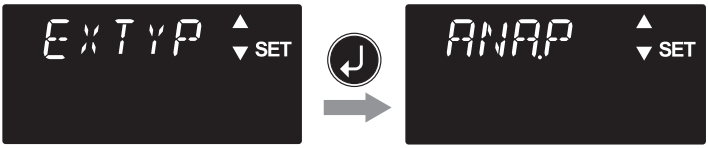

2 **Choose the ANA.V option**



3 **Set the 1st input current (mA) to the setpoint 1**

Use the ▲ and ▼ keys to adjust and the ↵ key to confirm the amps.
The ▼ key to move to the next step.

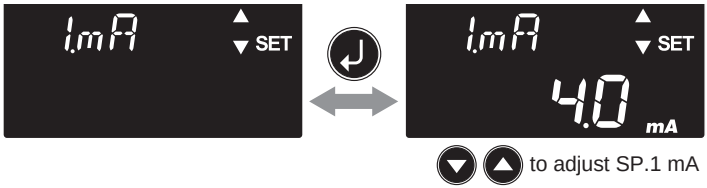

4 **Set the 1st stroke rate or output capacity to the setpoint 1**

Use the ▲ and ▼ keys to adjust and the ↵ key to confirm the value.
Push the ▼ key to move to the next step.



5 **Set the 2nd input current and the 2nd stroke rate or output capacity to the setpoint 2 as well**

Push the ⏎ key to confirm and the ▼ key to move to the next menu.

6 **Select the "CURVE" option and determine the operation pattern of the "LINE", "BOX" or "LIMIT"**

The ⏎ key to confirm your selection. See page 23 for each proportional pattern.

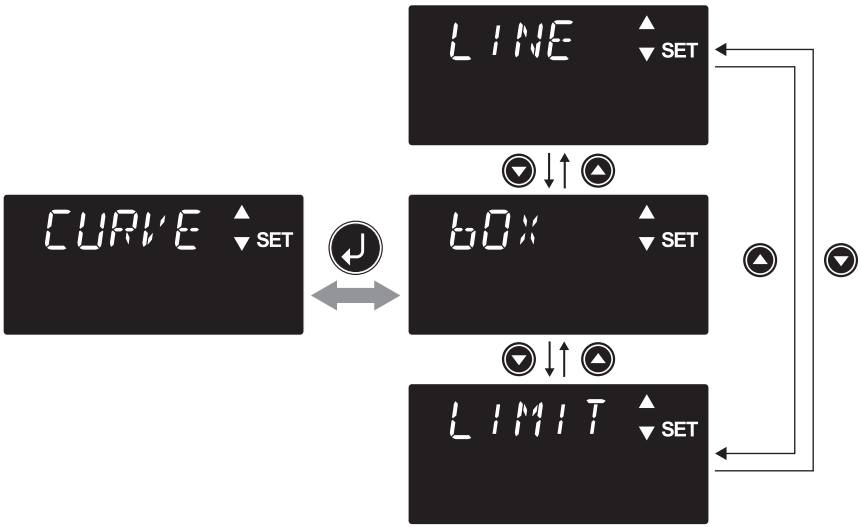

7 **Push the ☰ key that brings you back to the Menu mode**

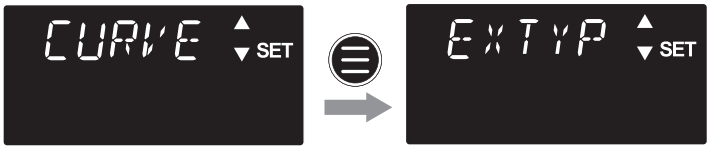

PLS.V (Pulse variable)

If you want to use the different flow unit than "%", select the desired flow unit in advance over the MAN WAIT mode or the EXT WAIT mode. Note that the calibration must be performed before selecting the flow unit.

Enter a different value to the setpoint 1 and setpoint 2. If the same value is entered, the display will blink for a few seconds and return to the previous value.

1 **Enter the menu mode and select the EXTYP option**

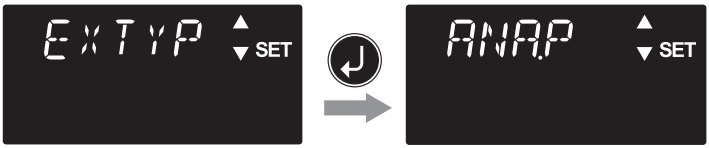

2 **Choose the PLS.V option**

The PULSE option is automatically selected to the DIGI.1 input.

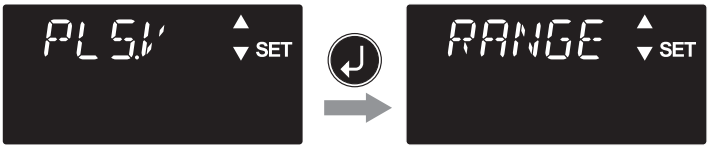

3 **Select the pulse frequency range (Hz) based on the input device**

Select the 100Hz range or 500Hz based on the input device you use. Push the ↵ key to confirm the selection and the ▼ key to move to the next step.

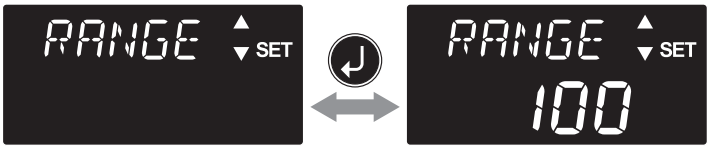

4 **Set the 1st pulse frequency (Hz) to the setpoint 1**

Use the ▲ and ▼ keys to adjust and the ↵ key to confirm the Hz. Push the ▼ key to move to the next step.

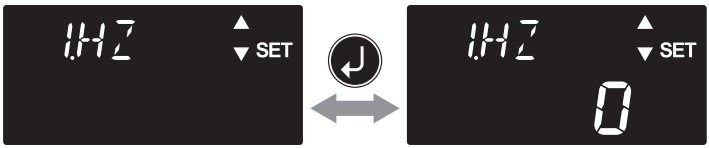

5 **Set the 1st output capacity to the setpoint 1**

Use the ▲ and ▼ keys to adjust and the ↵ key to confirm the capacity.
Push the ▼ key to move to the next menu.

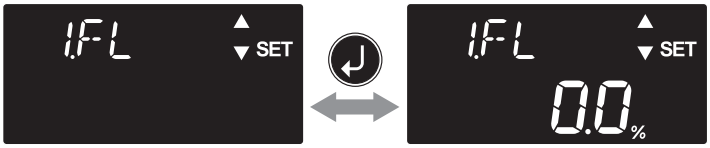

6 **Set the 2nd pulse frequency and the 2nd output capacity to the setpoint 2 as well**

Push the ↵ key to confirm and the ▼ key to move to the next menu.

7 **Select the "CURVE" option and determine the operation pattern of the "LINE", "BOX" or "LIMIT"**

The ↵ key to confirm your selection. See page 24 for each proportional pattern.

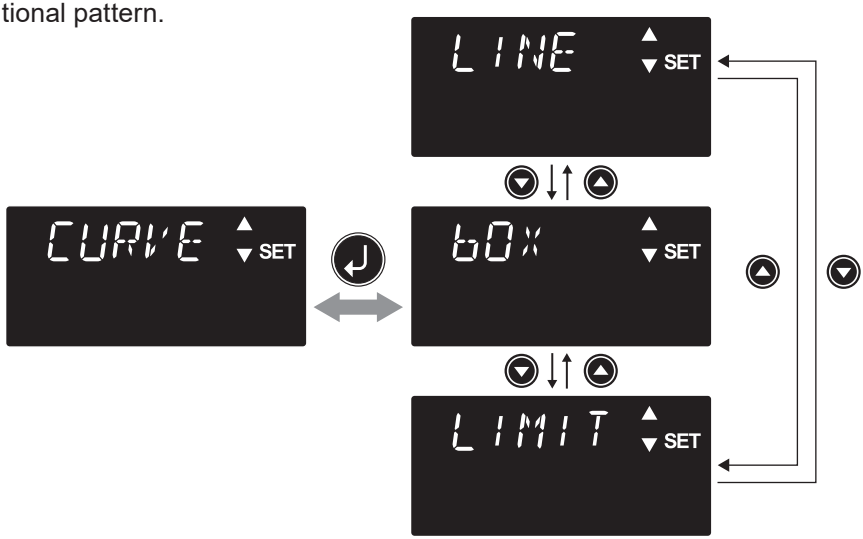

8 **Push the ☰ key that brings you back to the Menu mode**

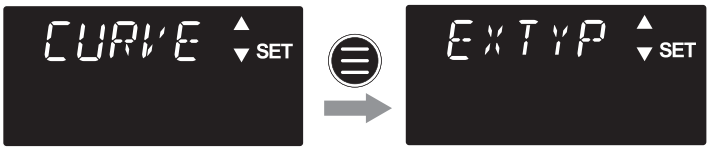

DIV (Divisor)

1 **Enter the menu mode and select the EXTYP option**

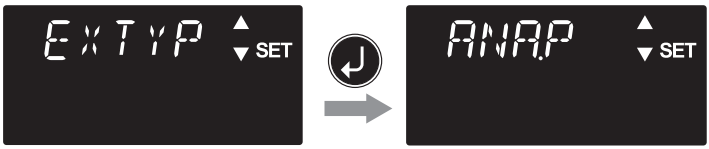

2 **Choose the DIV option**

The PULSE option is automatically selected to the DIGI.1 input here.

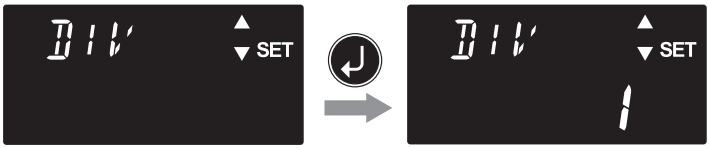

3 **Set the divisor that corresponds to one stroke**

Use the ▲ and ▼ keys to select and the ↵ key to confirm the divisor.

See page 25 for the setting example.



4 **Push the ☰ key that brings you back to the Menu mode**

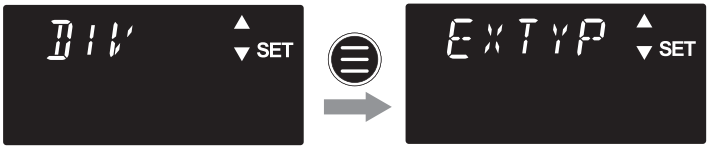

MULTI (Multiplier)

1 **Enter the menu mode and select the EXTYP option**

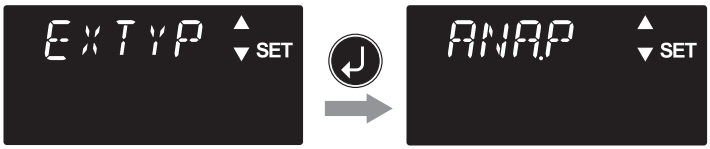

2 **Choose the MULTI option**

The PULSE option is automatically selected to the DIGI.1 input here.

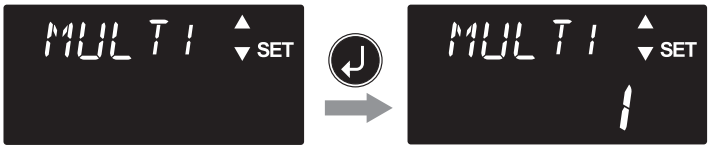

3 **Set the multiplier that multiples the pump stroke**

Use the ▲ and ▼ keys to select and the ↵ key to confirm the multiplier.

See page 25 for the setting example.



4 **Push the ☰ key that brings you back to the Menu mode**

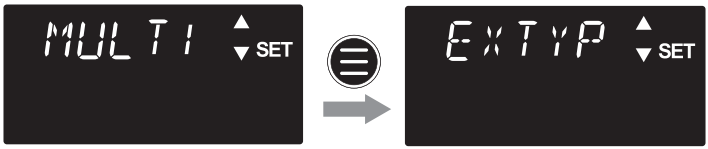

BATCH (Batch)

The batch completion alarm can be enabled. See page 100 as well. If you want to use the different flow unit than "%", select the desired flow unit in advance over the MAN WAIT mode or the EXT WAIT mode. Note that the calibration must be performed before selecting the flow unit (see page 73).

1 **Enter the menu mode and select the EXTYP option**

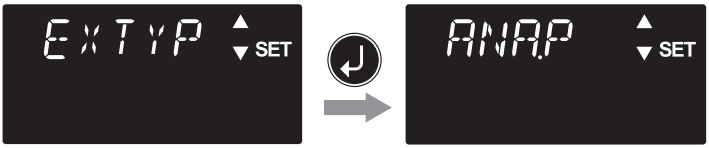

2 **Choose the BATCH option**

The PULSE option is automatically selected to the DIGI.1 input here.

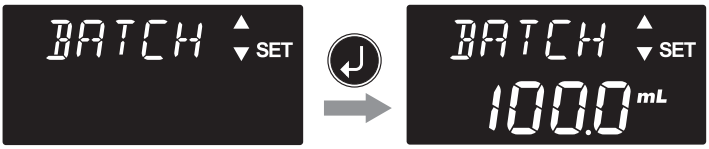

3 **Set the batch volume**

Use the ☰ key to move between the digits, the ▲ and ▼ keys to change and the ↵ key to confirm the value. See page 26 for the setting example.



4 **Push the ☰ key that brings you back to the Menu mode**

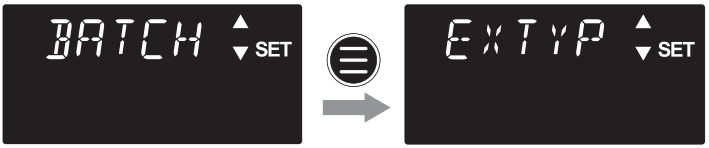

INT. B (Interval batch)

Before starting this procedure, ensure the pump is properly calibrated. Refer to page 73 for details.

NOTE

The pump operating time per batch is calculated as:

Batch volume ÷ MAN speed shown in flow rate units

See page 84 and select the appropriate flow rate unit corresponding to batch volume. The calculated operating time should not exceed the selected interval (day, hour, or minute). During the operating time, the pump runs at the MAN speed.

1 **Enter the menu mode and select the EXTYP option**

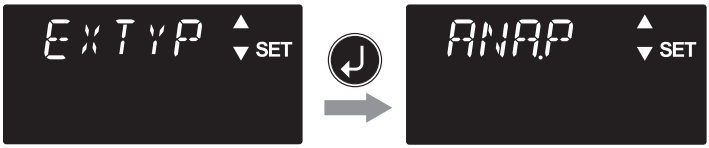

2 **Choose the INT. B option**

The PULSE option is automatically selected to the DIGI.1 input here.

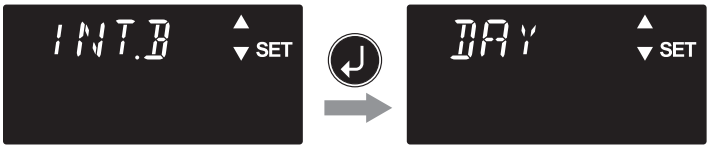

3 **Set the interval between the batch volume**

Set the DAY (0 to 9 days), HOUR (0 to 23 hours), and MIN (0 to 59 minutes). Press the ↵ key to confirm the interval. See page 28 for the setting example.



4 **Set the batch volume**

Select the FLOW to set the batch volume. Use the ☰ key to move between the digits and the ↵ key to confirm the value.



Operation

5 **Push the ☰ key that brings you back to the Menu mode**

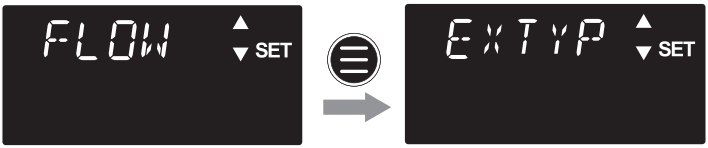

Calibration

See the Perform a Calibration section on page 73 as well.

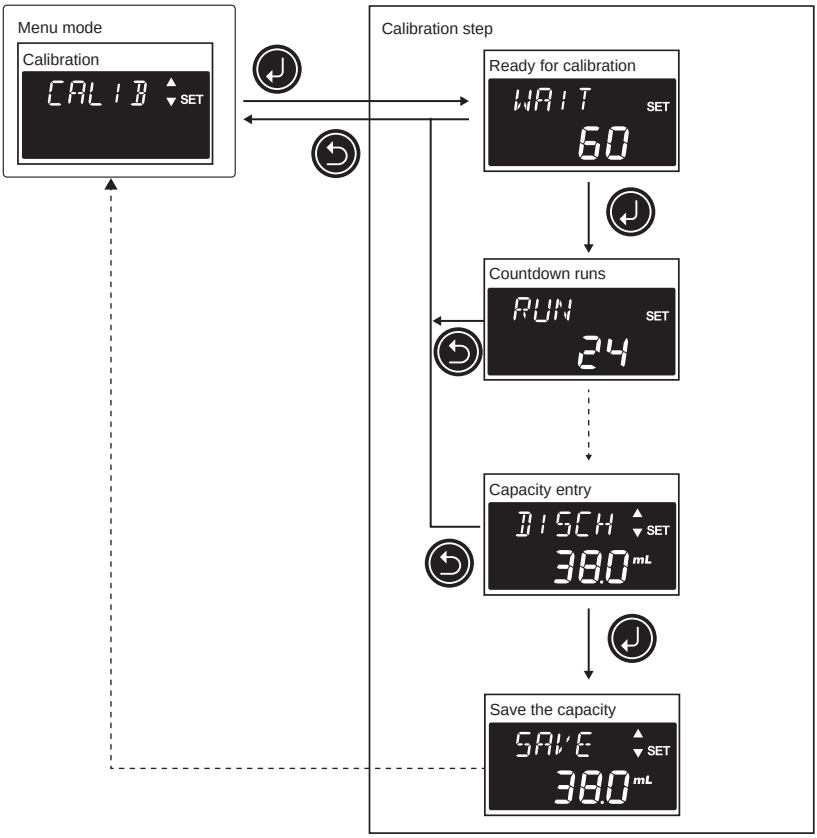

Input setting

Set the PULSE (DIGI.1 only), STOP, PreSTOP, I.LOCK, AUX, or OFF option to the DIGI.1, 2, or 3 input of the menu mode. The digital 1, 2, or 3 input of the pump terminal must be electrically connected with an external device correspondingly to the option you will set here. See page 54 for the Signal wire connection also.

*The PULSE option that is used for the PLS.V, DIV, MULTI, BATCH, and INT.B control modes can be selected only to DIGI.1 input of the menu mode.

*The FL.CHK control mode is available only via the DIGI.3 input in the menu mode.

*The I.LOCK (Interlock) signal takes precedence over the STOP, AUX, and PreSTOP signals. The STOP takes precedence of the AUX and PreSTOP signals, and the AUX the PreSTOP signal.

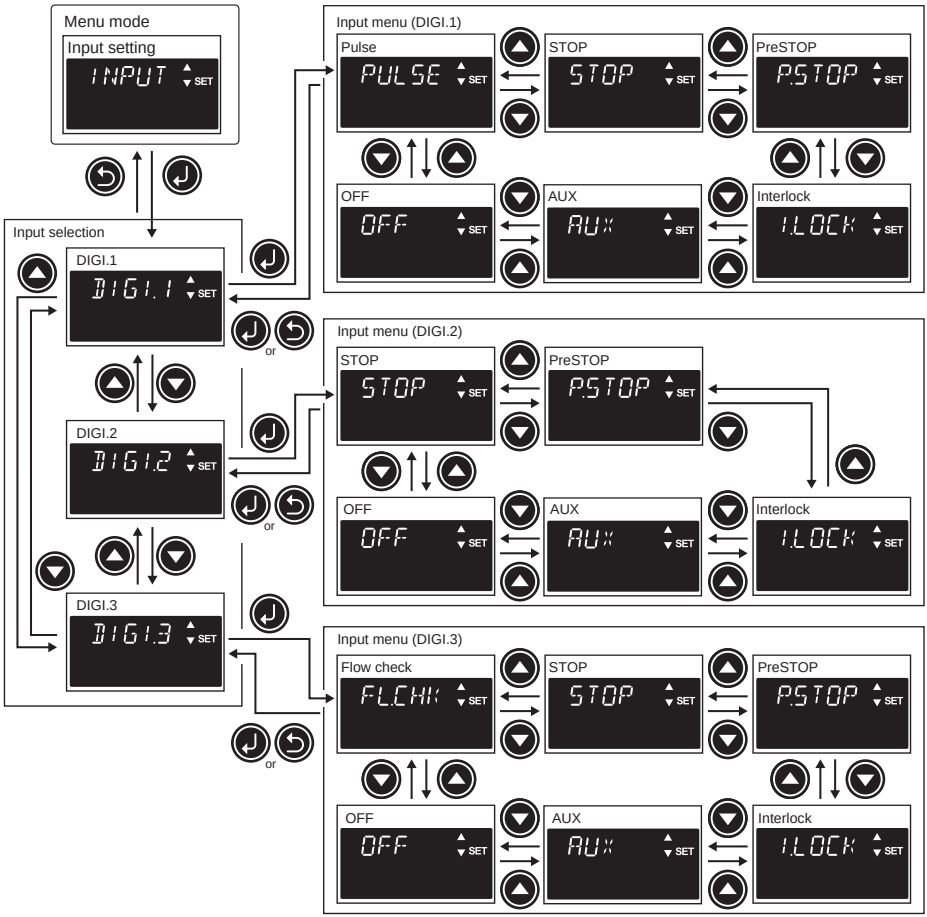

*Push of the ⏻ key returns you to the MAN/EXT selection mode, regardless of the current state.
*Push of the ☰ key returns you to the Menu mode, regardless of the current state.
*If the ☰ key is pushed before the ↵ key, all settings will be aborted and the pump returns to the Menu mode.

Output setting (photocoupler: open collector)

To enable the OUT 1, enter the menu mode and select the trigger option. Select the SPM to ouput the pulse signal simultaneously with the pump strokes, select the ALARM to output an alarm signal at the STOP, PreSTOP, Interlock, or B.COMP state, or select the STATE to output the signal that lets you know whether the pump is running or not (The STATE signal pauses when the pump is in MAN/EXT selection mode, WAIT mode or when the pump is paused by the STOP and I.LOCK signal.).

Options	Alarm outputs when:
STOP	The pump receives the STOP signal.
P.STOP (Pre-STOP)	The pump receives the Pre-STOP signal.
I.LOCK (Interlock)	The pump receives the interlock signal.
B.COMP (Batch Complete)	The pump has completed the batch volume (BATCH only).

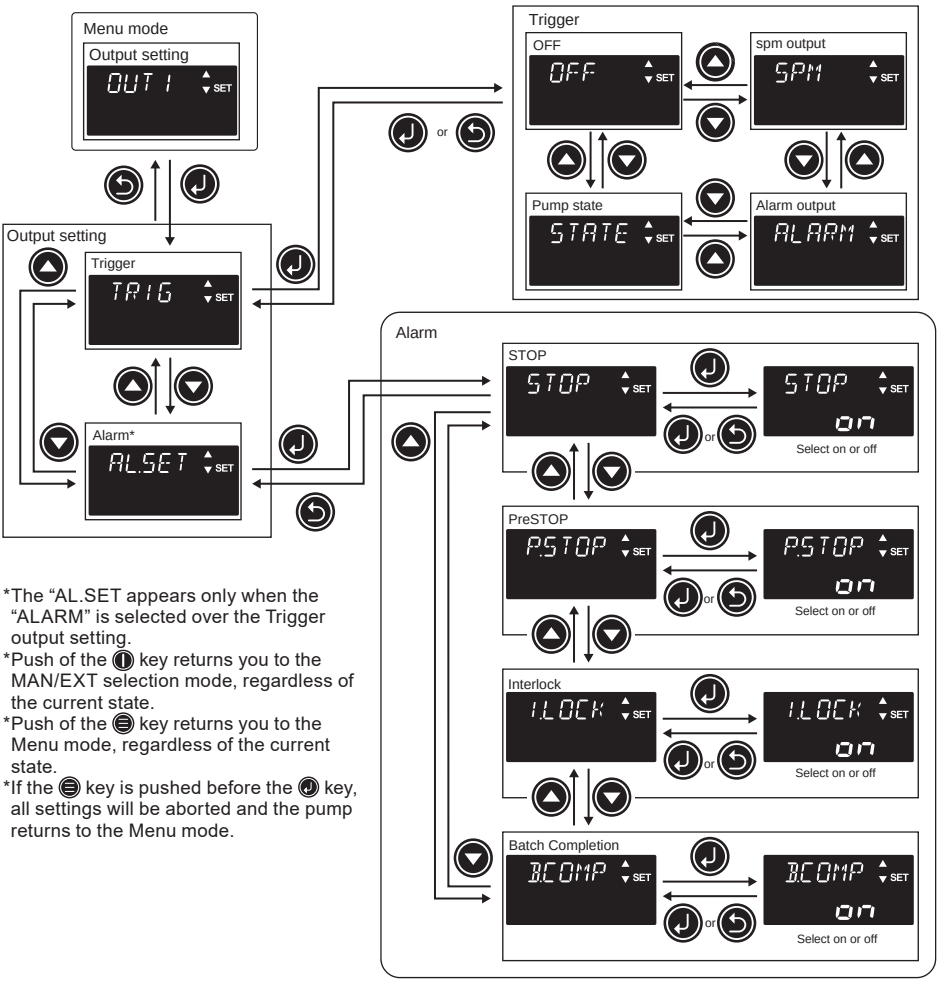

*The “AL.SET appears only when the “ALARM” is selected over the Trigger output setting.
*Push of the ⓘ key returns you to the MAN/EXT selection mode, regardless of the current state.
*Push of the ☰ key returns you to the Menu mode, regardless of the current state.
*If the ☰ key is pushed before the ⏎ key, all settings will be aborted and the pump returns to the Menu mode.

■ **Target setting**

1 **Enter Menu mode and select the OUT 1 option**

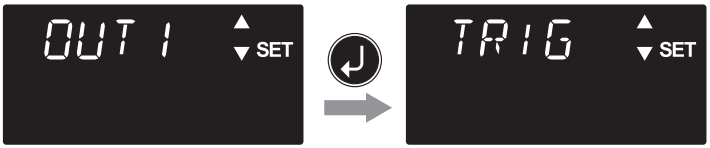

2 **Select TRIG, then select SPM, ALARM, STATE, or OFF**

*Selecting those options can be set simply with the ↵ key. Selecting the OFF option disables the output.

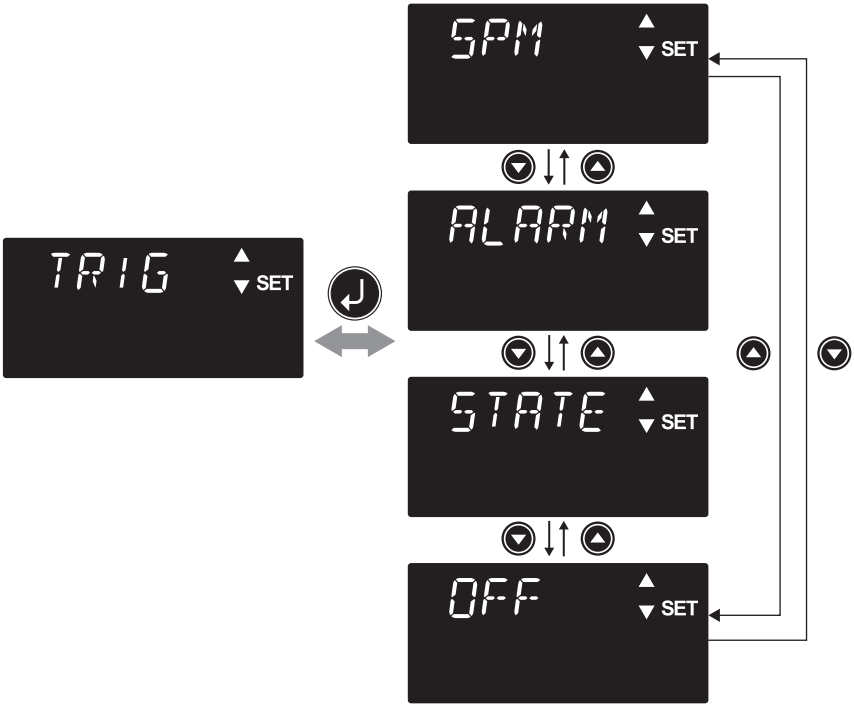

■ Alarm setting

If the AL.SET option is selected for OUT 1:

1 **Use the ▲ and ▼ keys to select the AL.SET and push the ↵ key**



2 **Enable or disable the STOP, P.STOP, I.LOCK, or B.COMP option**

Push the ↵ key once. Select and enable or disable the signal type that triggers the alarm output. Push the ↵ key once again to confirm the choice and then the ↩ key.

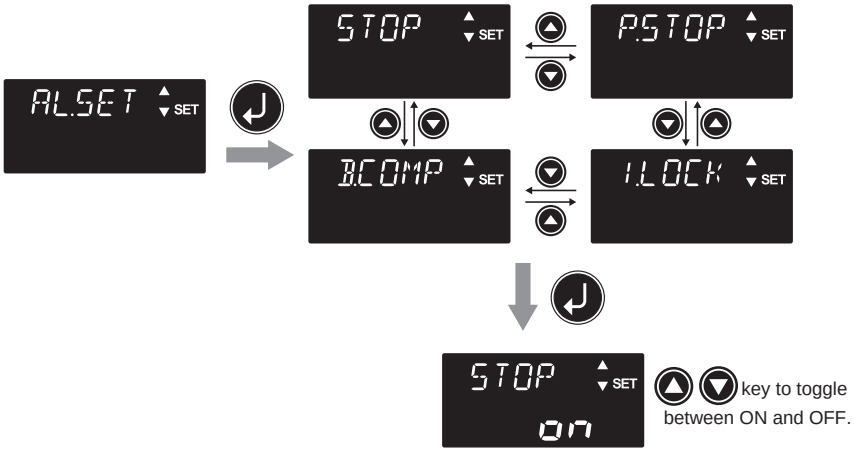

3 **Push the ☰ key that brings you back to the Menu mode**

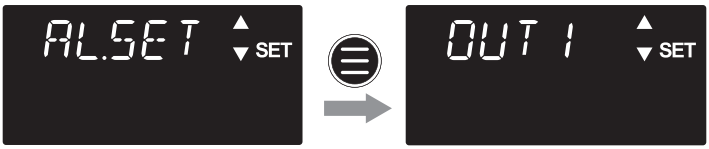

Flow check

For details of the flow check function, refer to the FCP/FCM mounting section on page 58.

*Although the same procedure is used for the settings, B.MODE and C.MODE have different functions.

*When the FL.CHK option is selected in the Menu mode, the DIGI.3 input is automatically set to FL.CHK, regardless of the selected input option.

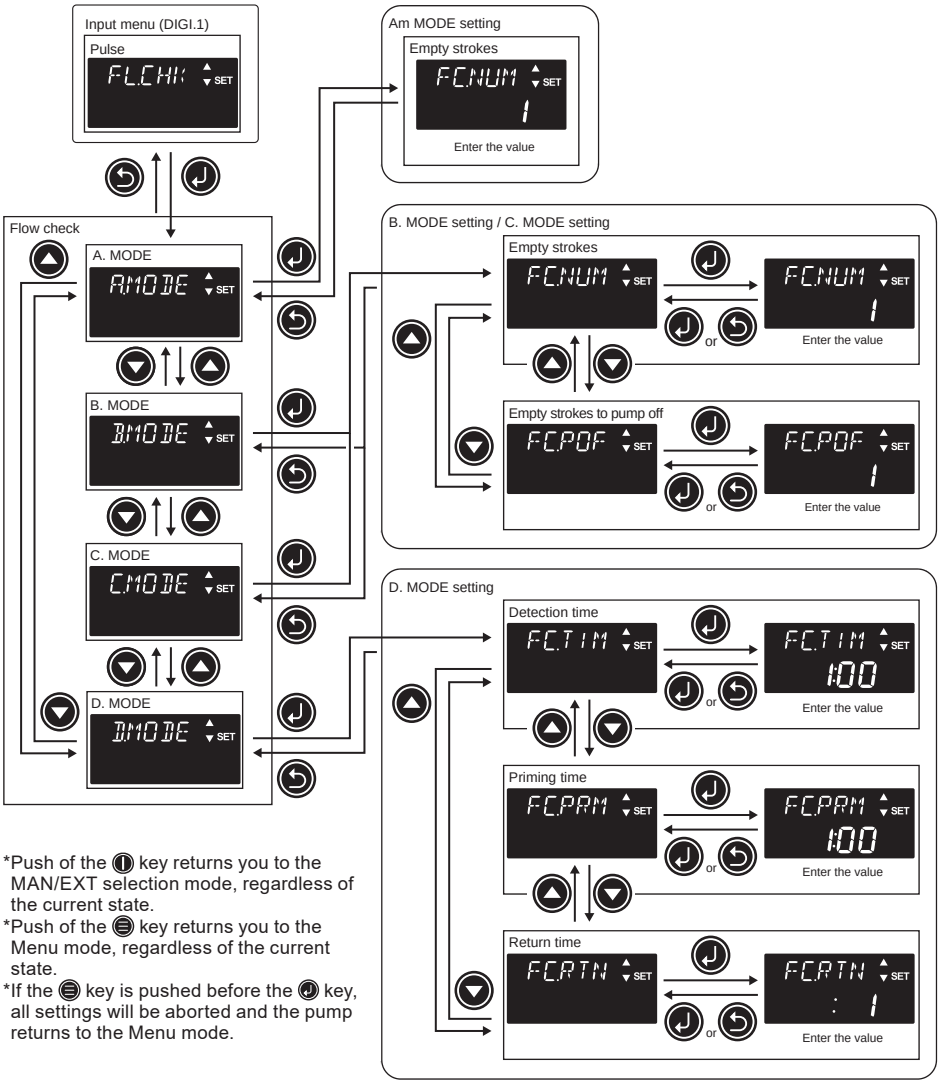

*Push of the ⏻ key returns you to the MAN/EXT selection mode, regardless of the current state.

*Push of the ☰ key returns you to the Menu mode, regardless of the current state.

*If the ☰ key is pushed before the ↵ key, all settings will be aborted and the pump returns to the Menu mode.

■ A. MODE setting

1 **Select the FL.CHK option in the Menu mode and push the ↵ key**



2 **Select the A. MODE and push the ↵ key**

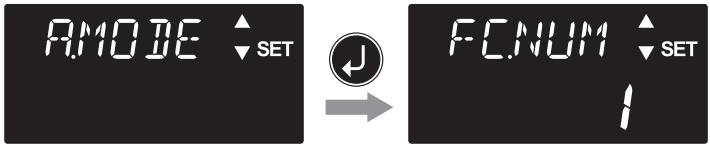

3 **Enter the FC.NUM value and push the ↵ key**

FC.NUM: Number of additional empty strokes before the pump stops.



■ **B. MODE / C. MODE setting**

1 **Select the FL.CHK option in the Menu mode and push the ↵ key**

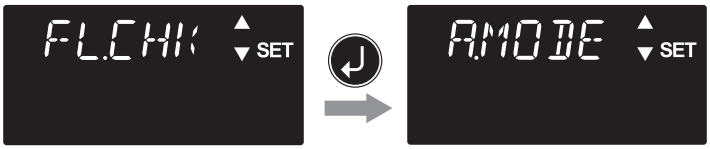

2 **Select B. MODE or C. MODE, then press the ↵ key**

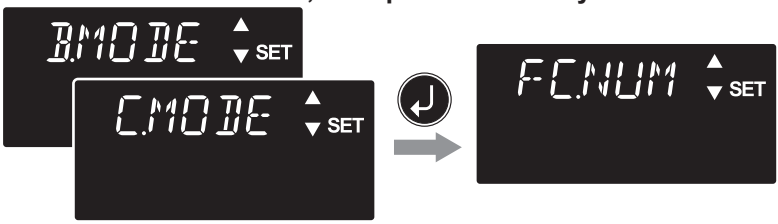

3 **Select the FC.NUM option and press the ↵ key**

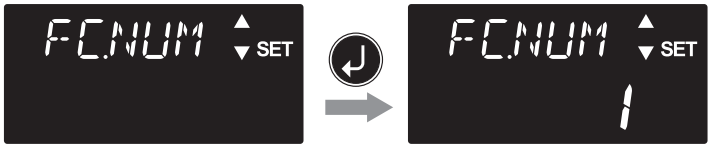

4 **Enter the FC.NUM value and press the ↵ key**

FC.NUM: Number of empty strokes before the next control action is triggered.

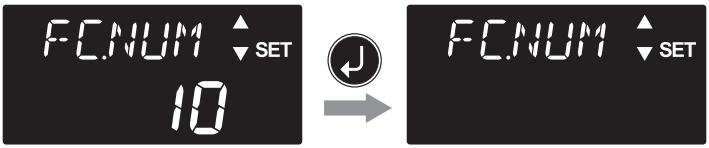

5 **Select the FC.POF option and press the ↵ key**

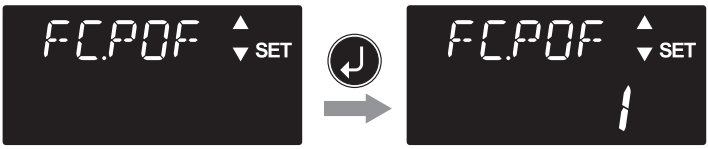

6 **Enter the FC.POF option and press the ↵ key**

FC.POF: Number of additional empty strokes before the pump stops.



■ D. MODE setting

1 **Select the FL.CHK option in the Menu mode and press the ↵ key**

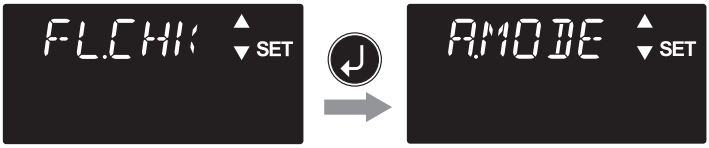

2 **Select D. MODE and press the ↵ key**

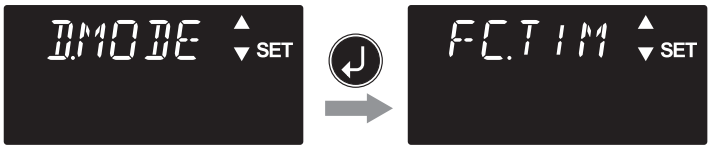

3 **Select the FC.TIM option and press the ↵ key**

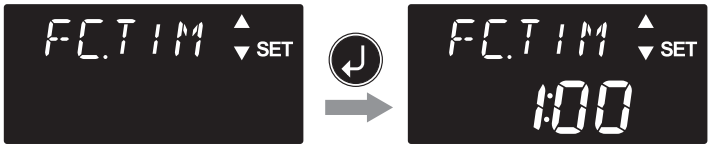

4 **Enter the FC.TIM value and press the ↵ key**

FC.TIM: After an empty stroke is detected, the pump continues operation in MAN or EXT mode for the set duration.

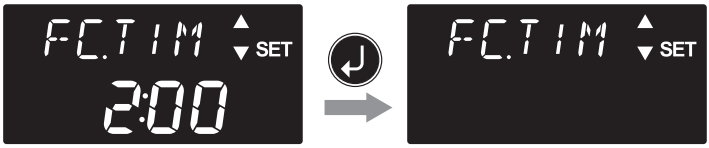

5 **Select the FC.PRM option and press the ↵ key**

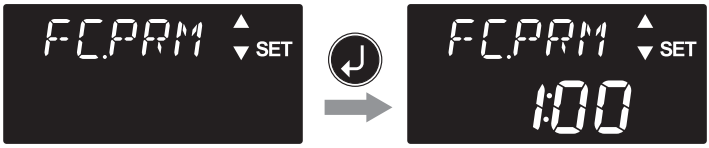

6 **Enter the FC.PRM value and press the ↵ key**

FC.PRM: After the FC.TIM, the pump operates at the maximum speed to expel air.

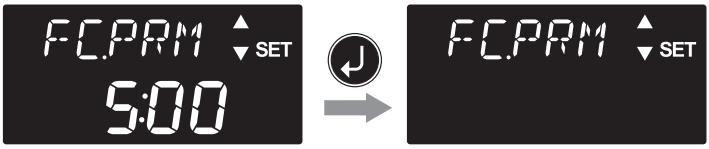

7 Select the FC.RTN option and press the ↵ key

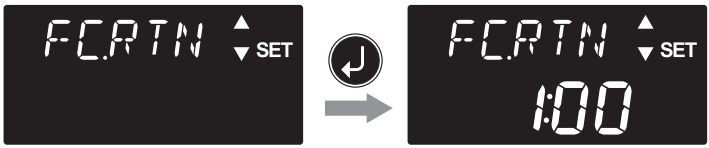

8 Enter the FC.RTM value and press the ↵ key

FC.RTM: If the pump continues to receive pulse signals from the FCP flow counter or the FCM flow checker during FC.RTM, the pump returns to the previous mode (MAN or EXT) and resumes normal operation, regardless of whether it is in FC.TIM or FC.PRM.

FC.RTN = 0 min and 30 sec



Min Sec

FC.RTN = 5 min and 0 sec



Min Sec

The Min field is not displayed when the value is less than 1 min.

Data logging

Data logs show the total capacity of the pump, the total strokes of the pump, the OUT1 ON times, the total power-on time, the total operation time, and the software version.

If the ↵ key is depressed for three seconds at any log menu, you can reset that log.

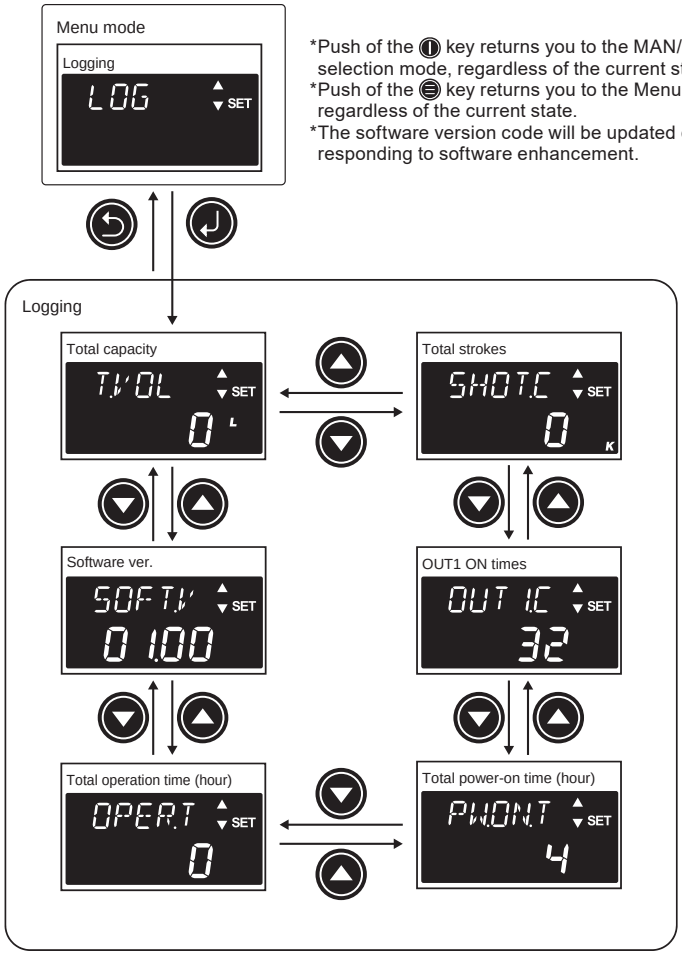

■ Flow chart

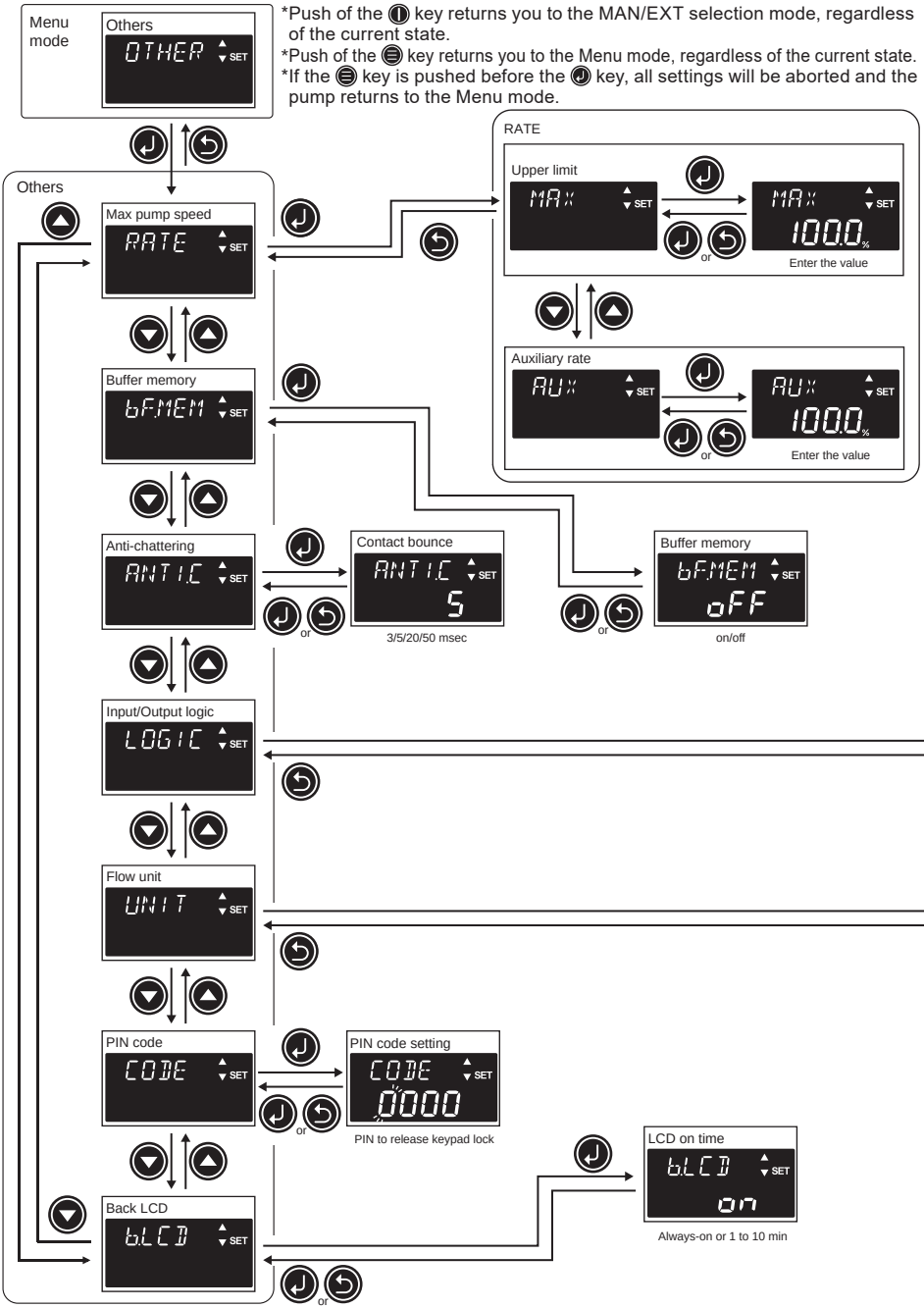
Menu mode
Others
OTHER
SET
*Push of the key returns you to the MAN/EXT selection mode, regardless of the current state.
*Push of the key returns you to the Menu mode, regardless of the current state.
*If the key is pushed before the key, all settings will be aborted and the pump returns to the Menu mode.
Others
Max pump speed
RATE
RATE
Upper limit
MAX
1000
Enter the value
Auxiliary rate
AUX
1000
Enter the value
Buffer memory
bFMEM
Anti-chattering
ANTIC
Contact bounce
5
3/5/20/50 msec
Buffer memory
oFF
on/off
Input/Output logic
LOGIC
Flow unit
UNIT
PIN code
CODE
PIN code setting
0000
PIN to release keypad lock
Back LCD
bLCD
LCD on time
on
Always-on or 1 to 10 min
or

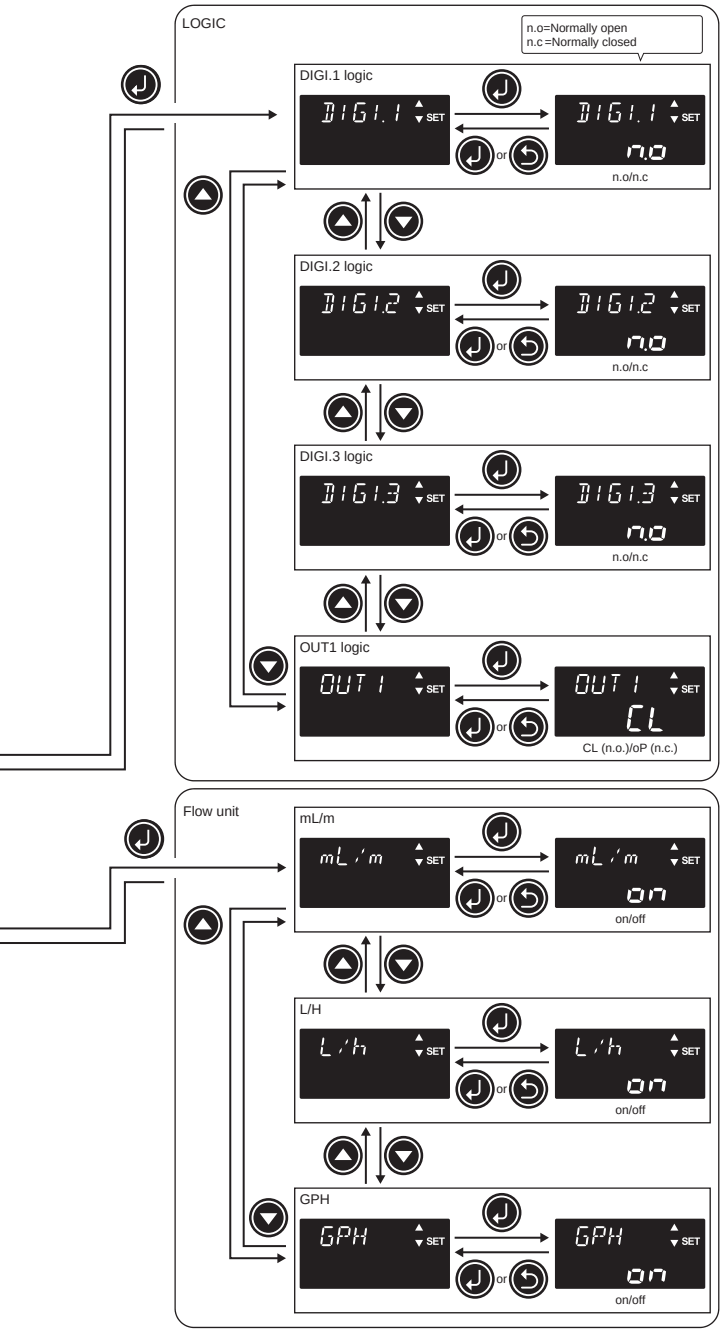
LOGIC
n.o=Normally open
n.c =Normally closed
DIGI.1 logic
DIGI.1
SET
or
n.o/n.c
DIGI.2 logic
DIGI.2
n.o/n.c
DIGI.3 logic
DIGI.3
n.o/n.c
OUT1 logic
OUT 1
CL
CL (n.o.)/oP (n.c.)
Flow unit
mL/m
on/off
L/H
GPH

■ Other setting

The MAX pump speed, AUX speed, buffer memory, anti-chattering, input/output logic, flow unit, PIN code, and backlight LCD on time.

NOTE

Settings will not be entered unless the ↵ key is pushed for confirmation. Note if the ↩, ☰, or ⏻ key is pushed before the ↵ key, your setting will be aborted.

RATE (Upper limit spm)

1 Enter the menu mode and select the OTHER option

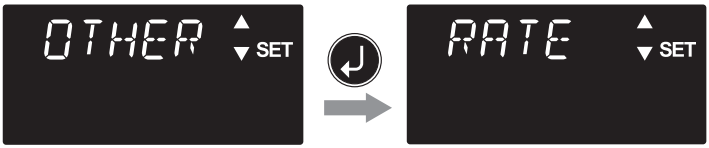

2 Choose the RATE option



3 Select the MAX or AUX option and push the ↵ key

The MAX represents the MAN/EXT/Priming speeds, and the AUX represents the AUX speed individually.

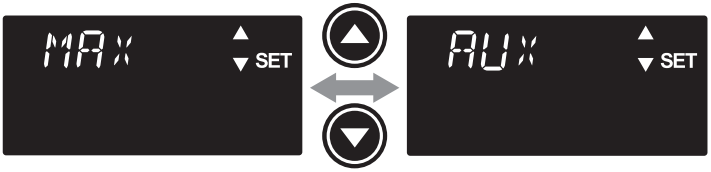

4 Use the ▲ and ▼ keys to adjust the MAX or AUX speed

If you want to use the different flow unit than "%", select the desired flow unit in advance over the MAN WAIT mode or the EXT WAIT mode.



5 **Push the ↵ key to confirm the setting**

bF.MEM (Buffer memory)

Enable or disable the buffer memory based on your application. The buffer memory can be used for the DIV, MULT, and BATCH control modes.

1 **Enter the menu mode and select the OTHER option**

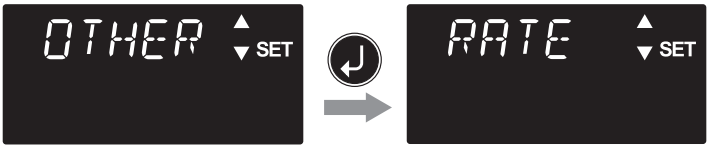

2 **Choose the bF.MEM option**

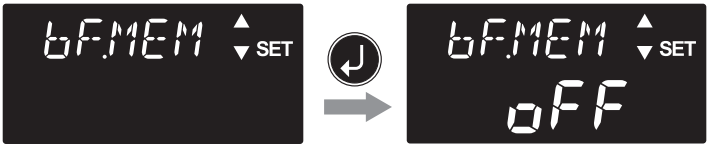

3 **Select the "on" or "oF" option**

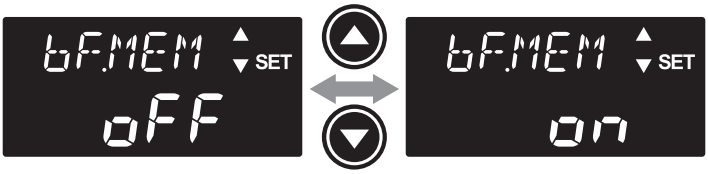

4 **Push the ↵ key to confirm the setting**

ANTI.C (Anti-chattering)

Set the bounce threshold based on the actual pulse width (ON time) in order to prevent the adverse effect of chattering (contact bounce) and electrical noise.

NOTE

When 500 Hz is selected in the “RANGE” setting of “PLS.V,” the chattering suppression setting is disabled. To enable the chattering suppression setting, make sure that the “RANGE” setting is set to 100 Hz.

1 **Enter the menu mode and select the OTHER option**

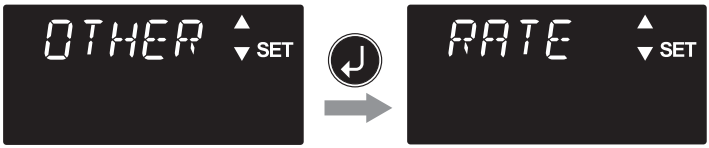

2 **Choose the ANTI.C option**

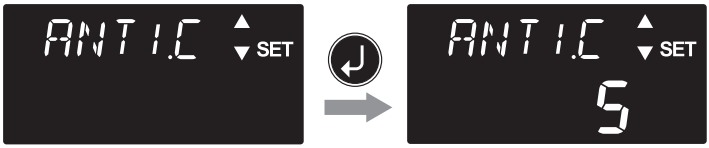

3 **Select the best bounce threshold**

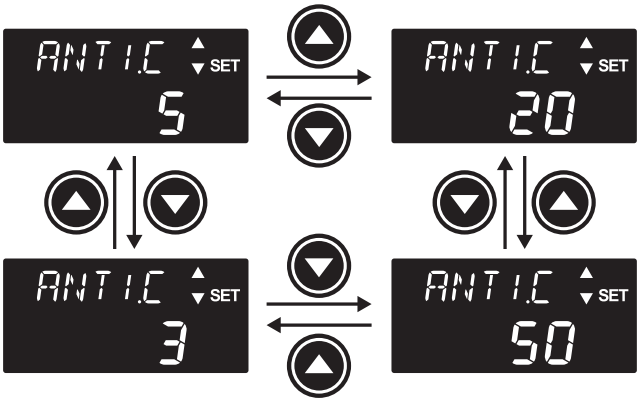

4 **Push the ⏎ key once to confirm the setting**

LOGIC (Input/Output logic)

Select "n.o" (factory default) or "n.c" for the DIGI.1, DIGI.2, or DIGI.3 input. This determines whether the pump runs or stops based on the external signal applied to the EXT IN/OUT or EXT IN terminal.

For example, with the "STOP" function and "n.o" selected, the pump stops while the signal is present (normally-open contact). With the "STOP" function and "n.c" selected, the pump runs while the signal is present (normally-closed contact).

Also, select "CL" (factory default) or "oP" for the OUT1 output to control an external device or alarm.

With the "ALARM" function and "CL" selected for OUT1, the NO contact closes when an alarm signal is output. With the "ALARM" function and "oP" selected, the NC contact opens when an alarm signal is output.

1 **Enter the menu mode and select the OTHER option**

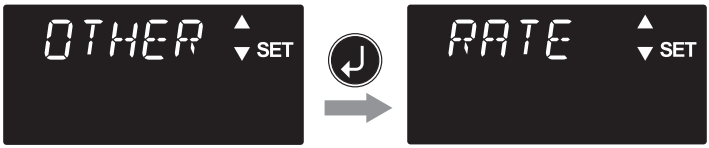

2 **Choose the LOGIC option**

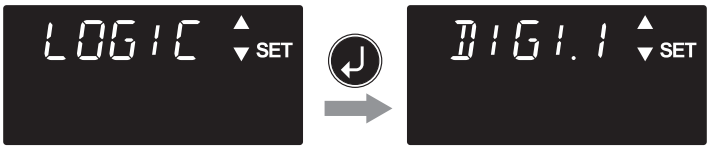

3 **Select the DIGI or OUT option and push the ↵ key**

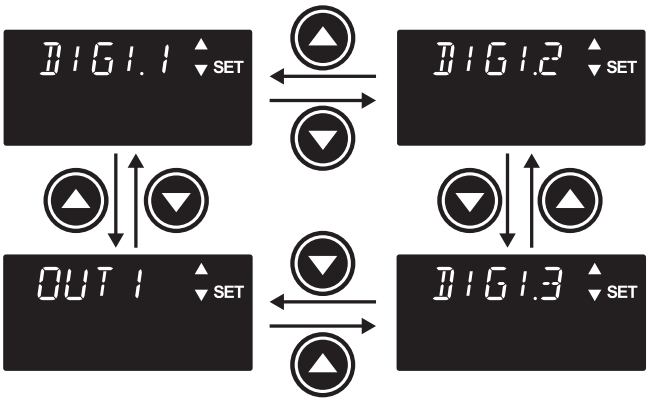

4 **Set the "n.o" (normally-open) or "n.c" (normally-closed) to the input or "CL" (normally-open) or "oP" (normally-closed) to the output**

Input logic



Output logic



5 **Push the ↵ key once to confirm the setting**

UNIT (Flow units)

Enable the flow unit which you use and turn off others.

1 **Enter the menu mode and select the OTHER option**



2 **Choose the UNIT option**

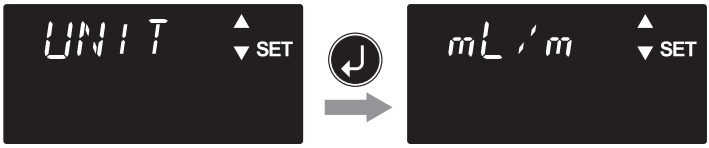

3 **Select the units you will enable or disable and press the ↵ key**

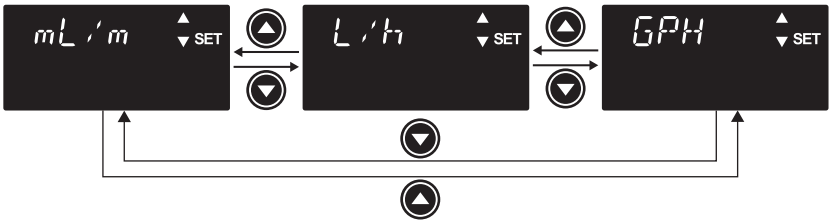

4 **Select on or off for the chosen unit**



5 **Push the ⏎ key to confirm the setting**

CODE (PIN number entry)

A PIN is required to release a keypad lock state.

*The default setting is "0000".

1 **Enter the menu mode and select the OTHER option**

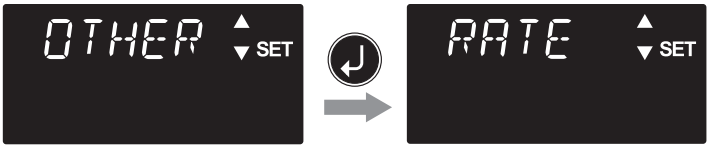

2 **Choose the CODE option**

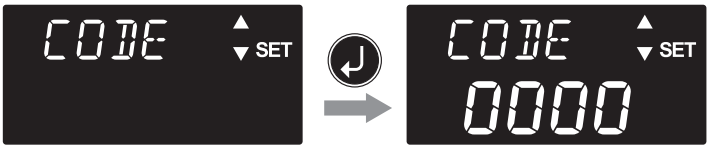

3 **Enter the new PIN code**

Use the ☰ key to move between the digits, ▲ and ▼ keys to change the value.

4 **Push the ⏎ key to confirm the setting**

b. LCD (Backlight LCD on time)

Set the on time of the backlight LCD.

1 **Enter the menu mode and select the OTHER option**

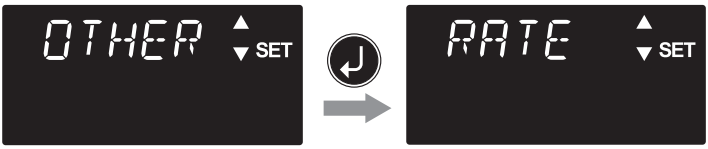

2 **Choose the b.LCD option**

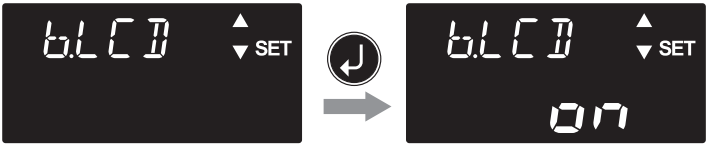

3 **Enter the on time**

Use the ▲ and ▼ keys to select 1 to 10 minutes for the LCD to light and then automatically goes off.

*The "on" option is "Always-on".

4 **Push the ↵ key to confirm the setting**

Maintenance

This section describes troubleshooting, inspection, wear part ***replacement, exploded views and specifications.***

Important

- Follow instructions in this manual for replacement of wear parts. Do not disassemble the pump beyond the extent of the instructions.
- Always wear protective clothing such as an eye protection, chemical resistant gloves, a mask and a face shield during disassembly, assembly or maintenance work. The specific solution will dictate the degree of protection. Refer to SDS precautions from the solution supplier.
- Risk of electrical shock. Be sure to turn off power to stop the pump and related devices before service is performed.

Before unplugging the pump

Always stop the pump by key operation. And wait for three seconds before unplugging the pump. Otherwise, the last key operation to stop the pump may not be put in memory. In this case the pump unintentionally starts to run as powered on, discharging liquid.

NOTE

- It's not the manufacturer's responsibility for any failure due to corrosion or erosion occurred in your operating condition.
- For the need of repair, contact your distributor of Iwaki or the manufacturer of equipment in which our product is built.
- Be sure to drain chemicals and flush the inside of the pump before return so that a harmful chemical does not spill out in transit.

Troubleshooting

First check the following points. If the following measures do not help remove problems, contact us or your nearest distributor.

States	Possible causes	Solutions
The pump does not run. (LED does not light. Blank screen.)	Power voltage is too low.	• Observe the allowable voltage range of 90-264VAC.
	The pump is not powered.	• Check the switch if it is installed. • Correct wiring. • Replace a broken wire to new one.
Pump does not prime.	Pump is air locked.	• Prime pump per instructions. See page 63.
	Air in suction tubing.	• Reroute suction tubing to eliminate air trap.
	A valve set is installed upside down.	• Reinstall the valve set.
	Valve gasket is missing.	• Install valve gasket.
	Foreign matters are stuck in the valve ball in the pump head.	• Take apart, inspect and clean the valves. Replace as necessary.
	A valve ball is stuck on a valve seat.	• Take apart, inspect and clean the valve. Replace as necessary.
Output fluctuates.	Air is trapped in the pump.	• Prime pump per instructions. See page 63.
	Overfeeding	• Purchase separately and mount the check valve. See page 48.
	Foreign matters are stuck in the valve ball in the pump head.	• Take apart, inspect and clean the valves. Replace as necessary.
	Diaphragm is damaged.	• Replace diaphragm. See page 130.
	Pressure fluctuates at an injection point.	• Maintain a pressure constant at an injection point by optimizing tubing or by relocating the point.
Liquid leaks.	The fitting, the fitting nut or the air vent body is loose.	• Retighten them.
	Pump head is loose.	• Retighten the pump head bolts. See page 61 for the rated torque.
	O rings or valve gaskets are missing.	• Install O rings and valve gaskets in place.
	Diaphragm is damaged.	• Replace diaphragm. See page 130.
	Excessive discharge pressure.	• Check that the discharge line is not closed. • Check if tubing is not clogged.

Inspection

Perform daily and periodic inspection to keep pump performance and safety.

Daily inspection

Check the following points. If you notice any abnormal or dangerous conditions, suspend operation immediately and inspect/solve problems. See the troubleshooting section as necessary.
When wear parts come to the life limit, replace them with new ones. Contact us or your nearest distributor for details.

No.	States	Points to be checked	How to check
1	Pumping	• If liquid is pumped.	Flow meter or visual inspection
		• If the suction and discharge pressure are normal.	Check specifications.
		• If liquid has deteriorated, crystallized or precipitated.	Visual or audio inspection
2	Noise and vibration	• If abnormal noise or vibration occurs. They are signs of abnormal operation.	Visual or audio inspection
3	Air ingress from pump head joints and the suction line	• If pumped liquid includes air bubbles, check the line for leakage and loose connection and retighten as necessary.	Visual or audio inspection

Periodic inspection

Retighten the pump head bolts evenly to the following torque in diagonal order.

*Head bolts may loosen in operation. How fast the bolts start to loosen is depending on operating conditions.

Tightening torque

Pump unit	Torque	Bolts
EWP-A/-B/-C/-D	2.16 N•m	M4 hex. socket head bolt
EWP-E	2.55 N•m	M4 hex. socket head bolt
EWP-E-V	2.16 N•m	M4 hex. socket head bolt
EWP-F	2.55 N•m	M5 hex. socket head bolt

*A hexagon wrench can be used for a torque wrench. See page 62.

Wear part replacement

To run the pump for a long period, wear parts need to be replaced periodically. It is recommended that the following parts are always stocked for immediate replacement. Contact us or your nearest distributor for details.

Precautions

- Solution in the discharge line may be under pressure. Release the pressure from the discharge line before disconnecting plumbing or disassembly of the pump to avoid solution spray.
- Rinse wet ends thoroughly with tap water.
- Each time the pump head is taken apart, replace the diaphragm, O rings, and valve sets with new ones.

Wear part list

<table>
<tr><th colspan="5">Parts</th><th># of parts</th><th>Estimated life</th></tr>
<tr><td rowspan="2">Valve set</td><td>VC/VS/VE/
PC/PS/PE/TC</td><td>FC</td><td>SH</td><td>PC-V/PS-V</td><td rowspan="2">2 sets</td><td rowspan="5">8000 hours</td></tr>
<tr><td>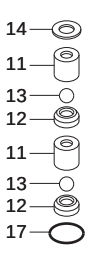
</td><td>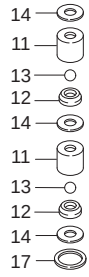
</td><td>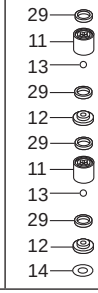
</td><td>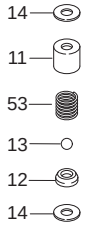
</td></tr>
<tr><td>Diaphragm</td><td colspan="4">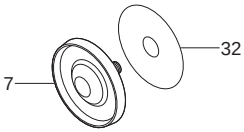

*The rear diaphragm sheet (32) is provided to the High pressure type only.</td><td>1</td></tr>
<tr><td>O ring</td><td colspan="4">

(except the FC and SH types)</td><td>See pages 133 – 140.</td></tr>
<tr><td>Automatic air vent valve set</td><td colspan="4">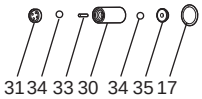
</td><td>1</td></tr>
</table>

*Wear part duration varies with the pressure, temperature and characteristics of liquid.
*The estimated life is calculated based on the continuous operation with clean water at ambient temperature.

Before replacement

First release pressure from the pump head and the discharge line.

1 **Stop the pump operation**

2 **Rotate the adjusting screw two revolutions counterclockwise to open the air vent port**

NOTE

Do not rotate it three revolutions from the closed position. Or liquid may come out from the adjusting screw.

*The air vent adjusting screw is NOT provided to the pumps with the FC wet end code. Establish an air vent line with an air vent valve and adjust the valve manually to expel gas from the pump and system before operation (see the sketch on page 66 as well.). In the case the air vent line is unable to be built, you have no choice but to remove the discharge line while it is under pressure. This is not totally recommended; however, use a cloth around the fitting nut of the check valve several times until it can be a protection against solution spray and the check valve is safely removed from the discharge tube.

3 **Check the pump head and the discharge line are depressurized**

Liquid pressure is released from the air vent line in the form of solution spray.

NOTE

If pressurized liquid is not expelled, run the pump with an opened air vent line until pressure is removed.

Valve set replacement

■ Discharge valve set disassembly/assembly

Necessary tools

- 38 mm or wider adjustable wrench
- A pair of tweezers

*Do not secure the pump base during disassembly.

1 **Remove the fitting nut, the discharge tube, and the air bleed tube**

NOTE

Rinse chemicals or crystals off the parts as necessary.

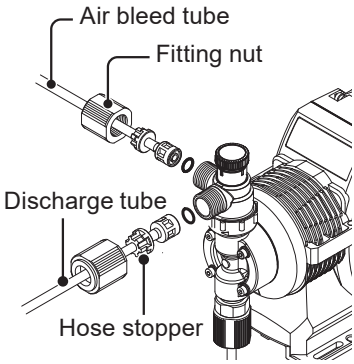

2 **Turn the lock nut counterclockwise and remove the air vent body A**

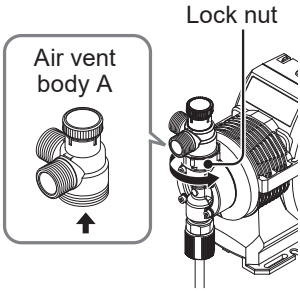

3 **Use an adjustable wrench and remove the air vent body B**

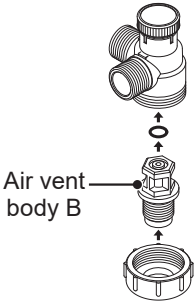

4 **Pull out the valve set with a pair of tweezers**

5 **Build up the new valve set into the pump head and hand-tighten the air vent body B through the lock nut as far as it will go**

Retighten the air vent body B by a further 90° with an adjustable wrench.

*There are many small parts in the liquid end. These parts must be installed correctly for proper operation of the pump (no leak or good pump output). Be sure both valve seats are in the same orientation. See the exploded view pages, also.

*Be sure to fit O rings and gaskets are in place.

*Keep the valve set clean.

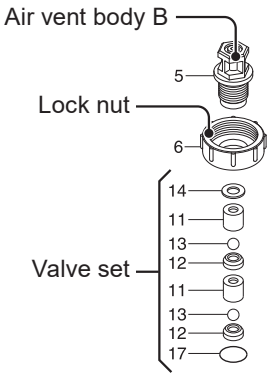

6 **Remount the air vent body A using the lock nut and connect tubes**

EWP-B/-C/-D/-E/-F FC

1 **Remove the pipe**

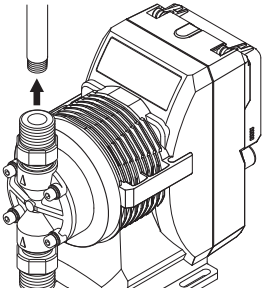

2 **Use an adjustable wrench and remove the fitting**

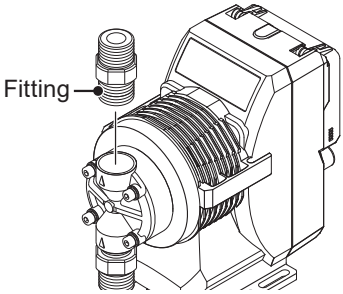

3 **Pull out the valve set with a pair of tweezers**

4 **Build up the new valve set into the pump head and hand-tighten the fitting as far as it will go**

Retighten it by a further 90° with an adjustable wrench.

*There are many small parts in the liquid end. These parts must be installed correctly for proper operation of the pump (no leak or good pump output). Be sure both valve seats are in the same orientation. See the exploded view pages, also.

*Be sure to fit gaskets are in place.

*Keep the valve set clean.

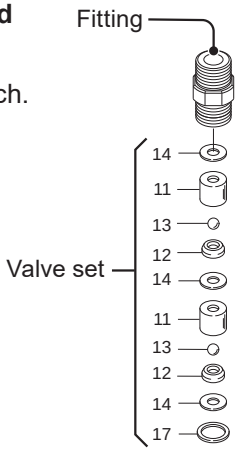

5 **Remount the pipe**

EWP-B/-C/-D/-E/-F SH

1 **Remove the discharge pipe and the air bleed tube**

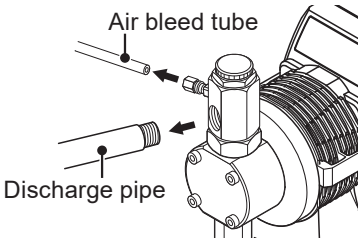

2 **Use an adjustable wrench to remove the lock nut and the air vent body A**

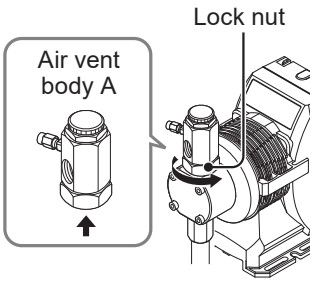

3 **Use an adjustable wrench and remove the air vent body B**

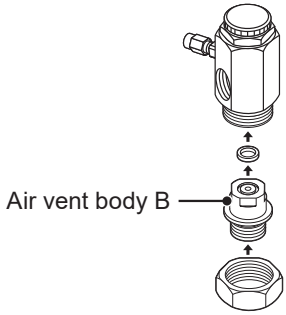

4 **Pull out the valve set with a pair of tweezers**

5 **Build up the new valve set into the pump head and hand-tighten the air vent body B through the lock nut as far as it will go**

Retighten the air vent body B by a further 90° with an adjustable wrench.

*There are many small parts in the liquid end. These parts must be installed correctly for proper operation of the pump (no leak or good pump output). Be sure both valve seats are in the same orientation. See the exploded view pages, also.

*Be sure to fit gaskets are in place.

*Keep the valve set clean.

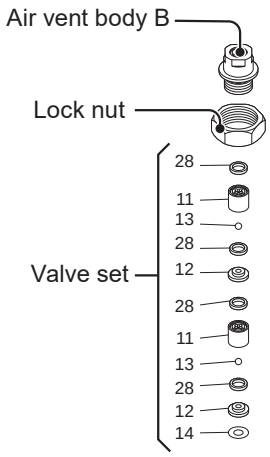

6 **Remount the air vent body A using the lock nut and connect the pipe and tube**

■ Suction valve set disassembly/assembly

NOTE

Be careful not to drop the valve set.

1 Remove the fitting nut and the suction tube

NOTE

Rinse chemicals or crystals off the parts as necessary.

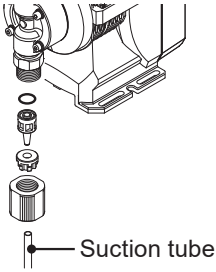

2 Remove the fitting

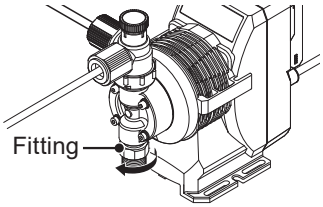

3 Pull out the valve set with a pair of tweezers

4 Build up the new valve set into the pump head and hand-tighten the air vent body B as far as it will go

Retighten it by a further 90° turn with an adjustable wrench.

*There are many small parts in the liquid end. These parts must be installed correctly for proper operation of the pump (no leak or good pump output). Be sure both valve seats are in the same orientation. See the exploded view pages, also.

*Be sure to fit O rings (except pumps with SH/FC wet ends) and gaskets in place.

*Keep the valve set clean.

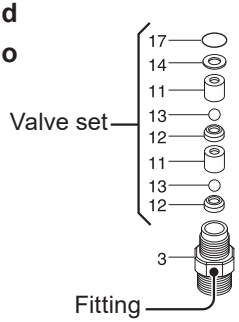

5 Reconnect the suction tube

■ Auto air vent valve set disassembly/assembly (Auto degassing type only)

Necessary tools

• Adjustable wrench • 27mm and 24mm spanners • A pair of tweezers

1 **Use an adjustable wrench or a 27 mm spanner to loosen the fitting nut and remove the air bleed tube**

*Be careful not to get wet with a residual chemical.

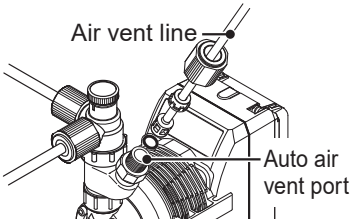

2 **Use an adjustable wrench or a 24 mm spanner to remove the fitting from the fitting adaptor**

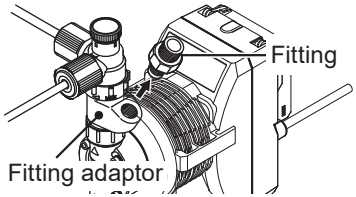

3 **Pull out the auto air vent valve with a pair of tweezers from the fitting adaptor**

4 **Remove the tape from the new auto air vent assy**

*Do not drop the auto air vent valve from the fitting.

5 **Hand-tighten the new auto air vent assembly into the fitting adaptor as far as it will go**

Retighten it by a further ¼ turn with an adjustable wrench or a 24 mm spanner.

*Arrange the auto air vent valve in the correct parts order and direction so the auto degassing works correctly. See page 140 for the correct order.

*Be sure to fit O rings in place.

*Keep the auto air vent valve clean.

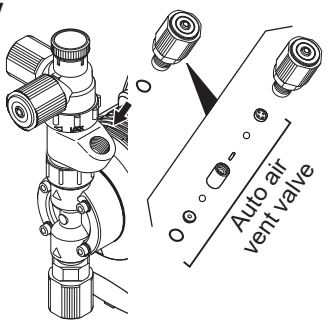

6 **Reconnect the air bleed tube**

*See the tube connection section on page 43 for details.

Diaphragm replacement

Necessary tools

- 27 mm or wider adjustable wrench
- 3 mm or 4 mm hex wrench (depending on pump size)
- Torque wrench

NOTE

A few diaphragm spacers may be inserted between the retainer and the shaft for the adjustment of the diaphragm location. Note that the number of diaphragm spacers provided varies at different pumps.

1 **Run the pump to set the stroke length to 0% and stop afterward**

Shorten the stroke length to 0% or just to the length that the diaphragm can be removed.

2 **Loosen the fitting nuts and remove the suction tube, discharge tube, and air bleed tube**

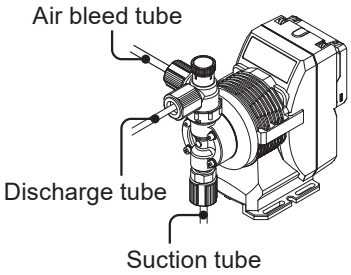

3 **Remove the pump head with the 3 mm or 4 mm hex wrench depending on the pump size**

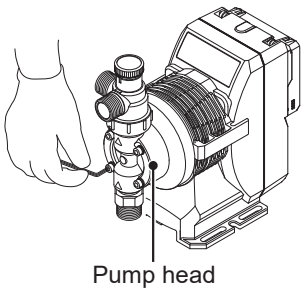

4 Unscrew the diaphragm from the shaft

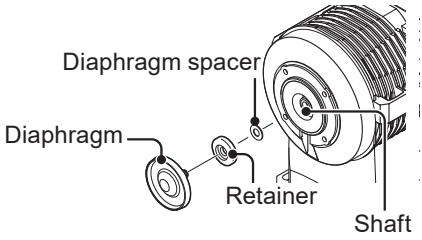

5 Slide the retainer and diaphragm spacer(s) onto the screw of the new diaphragm

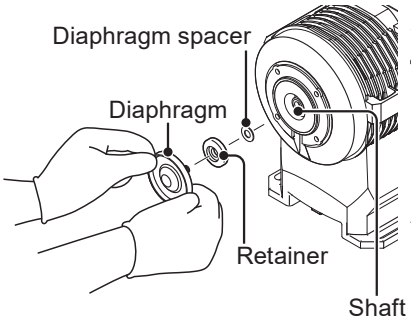

NOTE

- Fit the retainer with its round edge to the diaphragm.
- Try not to remove the separate bracket spacer during replacement. If removed inadvertently, catch the mating point with the bracket spacer and push that part into the bracket until it bottoms out.
- The EWP-E/-F types do not have the bracket spacer.

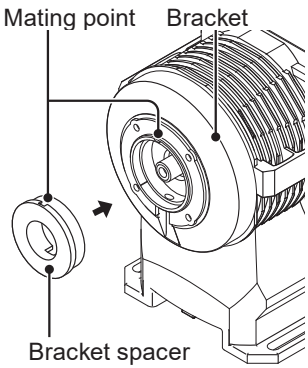

6 **Screw the new diaphragm into the shaft as far as it will go**

7 **Run the pump and set the stroke length to 100%**

Stop the pump afterward.

8 **Mount the pump head**

Tighten the head bolts diagonally and evenly by the specified torque at each model.

Tightening torque

Pump unit	Torque	Bolts
EWP-A/-B/-C/-D	2.16 N•m	M4 hex. socket head bolt
EWP-E	2.55 N•m	M4 hex. socket head bolt
EWP-E-V	2.16 N•m	M4 hex. socket head bolt
EWP-F	2.55 N•m	M5 hex. socket head bolt

*A hex wrench can be used for a torque wrench. See page 62.

9 **Reconnect the tubes**

Pump head, Drive unit & Control unit

Do not disassemble the pump beyond the description in this manual.

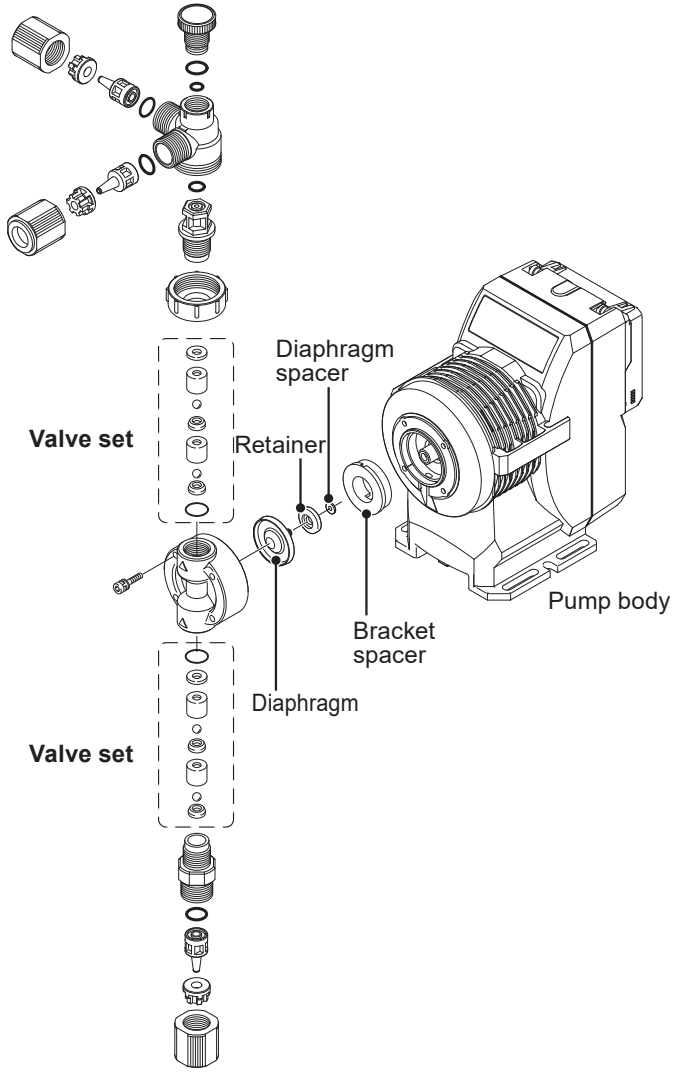

*Wet end materials and their sizes differ with models.
*The EWP-E/-F types do not have the bracket spacer.

■ EWP-A/-B/-C/-D/-E/-F VC/VS/VE/PC/PS/PE/TC

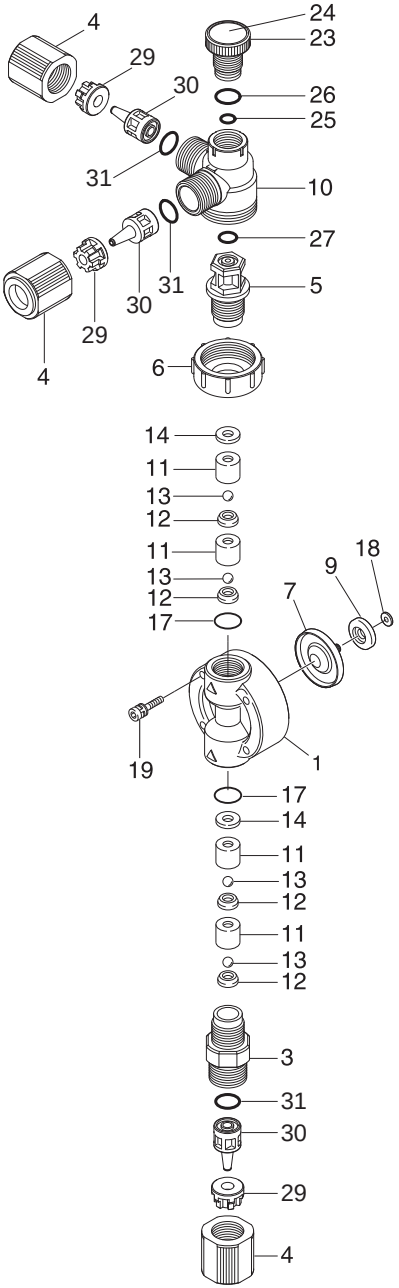

No.	Part names	# of parts
1	Pump head	1
3	Fitting	1
4	Fitting nut	3
5	Air vent body B	1
6	Lock nut	1
7	Diaphragm	1
9	Retainer	1
10	Air vent body A	1
11	Valve guide	4
12	Valve seat	4
13	Valve	4
14	Valve gasket	2
17	O ring	2
18	Diaphragm spacer	*
19	Hex. socket cap bolt [PW•SW]	4
23	Adjusting screw	1
24	Name plate	1
25	O ring	1
26	O ring	1
27	O ring	1
29	Hose stopper	3
30	Hose adaptor	3
31	O ring	3

*The number of diaphragm spacers varies with pump model.

■ EWP-B/-C/-D/-E/-F FC

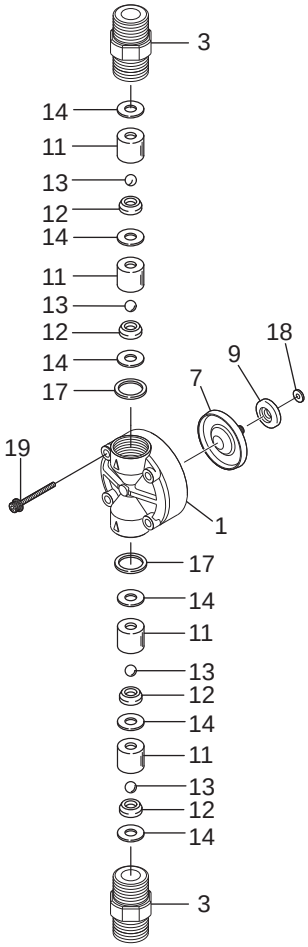

No.	Part names	# of parts
1	Pump head	1
3	Fitting	2
7	Diaphragm	1
9	Retainer	1
11	Valve guide	4
12	Valve seat	4
13	Valve	4
14	Valve gasket	6
17	Gasket	2
18	Diaphragm spacer	*
19	Hex. socket cap bolt [PW•SW]	4

*The number of diaphragm spacers varies with pump model.

■ EWP-B/-C/-D/-E/-F SH

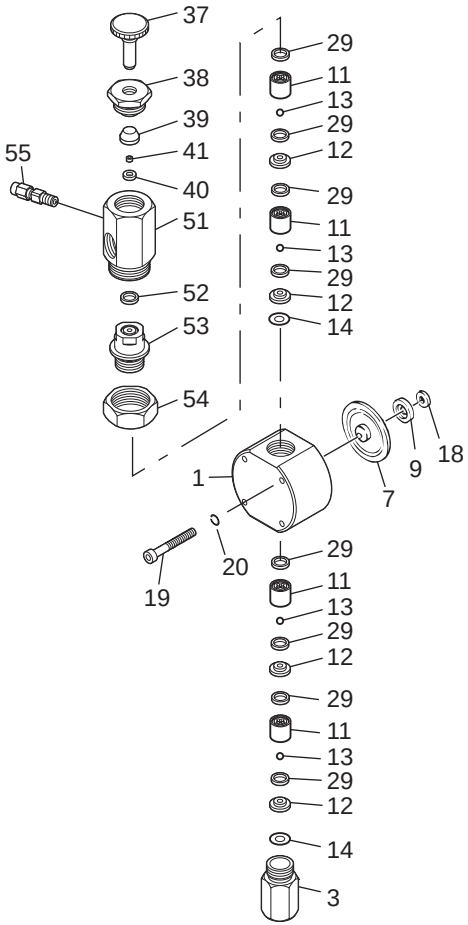

No.	Part names	# of parts
1	Pump head	1
3	Fitting	1
7	Diaphragm	1
9	Retainer	1
11	Valve guide	4
12	Valve seat	4
13	Valve	4
14	Valve gasket B	2
18	Diaphragm spacer	*
19	Hex. socket cap bolt	4
20	Spring washer	4
29	Valve gasket A	8
37	Adjusting screw	1
38	Seal nut	1
39	Seal ring	1
40	Seat	1
41	Seat ring	1
51	Air vent body A	1
52	Gasket	1
53	Air vent body B	1
54	Lock nut	1
55	Male connector	1

*The number of diaphragm spacers varies with pump model.

■ EWP-B PC/PS/PE -H

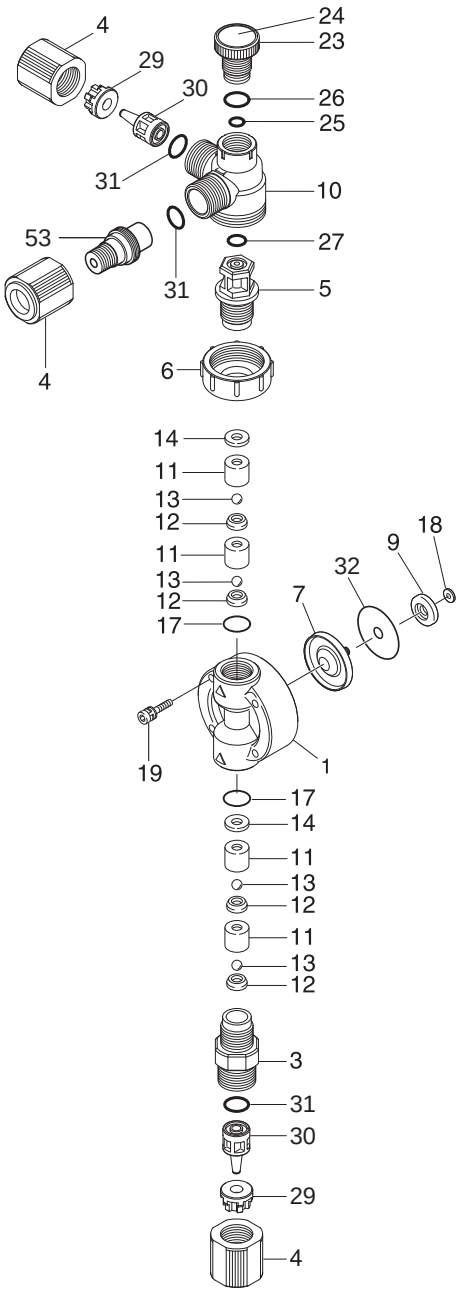

No.	Part names	# of parts
1	Pump head	1
3	Fitting	1
4	Fitting nut	3
5	Air vent body B	1
6	Lock nut	1
7	Diaphragm	1
9	Retainer	1
10	Air vent body A	1
11	Valve guide	4
12	Valve seat	4
13	Valve	4
14	Valve gasket	2
17	O ring	2
18	Diaphragm spacer	*
19	Hex. socket cap bolt [PW•SW]	4
23	Adjusting screw	1
24	Nameplate	1
25	O ring	1
26	O ring	1
27	O ring	1
29	Hose stopper	2
30	Hose adaptor	2
31	O ring	3
32	Rear diaphragm sheet	1
53	Fitting adaptor	1

*The number of diaphragm spacers varies with pump model.

■ EWP-B SH -H

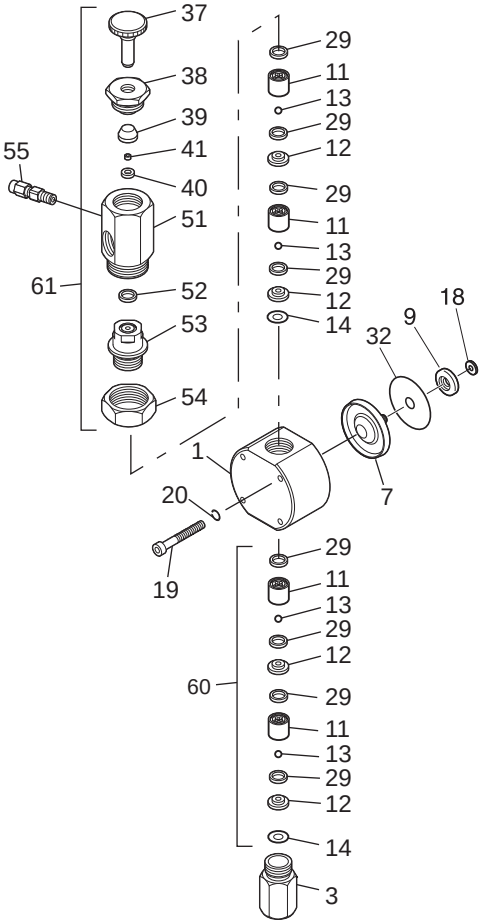

No.	Part names	# of parts
1	Pump head	1
3	Fitting	1
7	Diaphragm	1
9	Retainer	1
11	Valve guide	4
12	Valve seat	4
13	Valve	4
14	Valve gasket B	2
18	Diaphragm spacer	*
19	Hex. socket cap bolt	4
20	Spring washer	4
29	Valve gasket A	8
32	Rear diaphragm sheet	1
37	Adjusting screw	1
38	Seal nut	1
39	Seal ring	1
40	Seat	1
41	Seat ring	1
51	Air vent body A	1
52	Gasket	1
53	Air vent body B	1
54	Lock nut	1
55	Male connector	1

*The number of diaphragm spacers varies with pump model.

■ EWP-E PC/PS -V

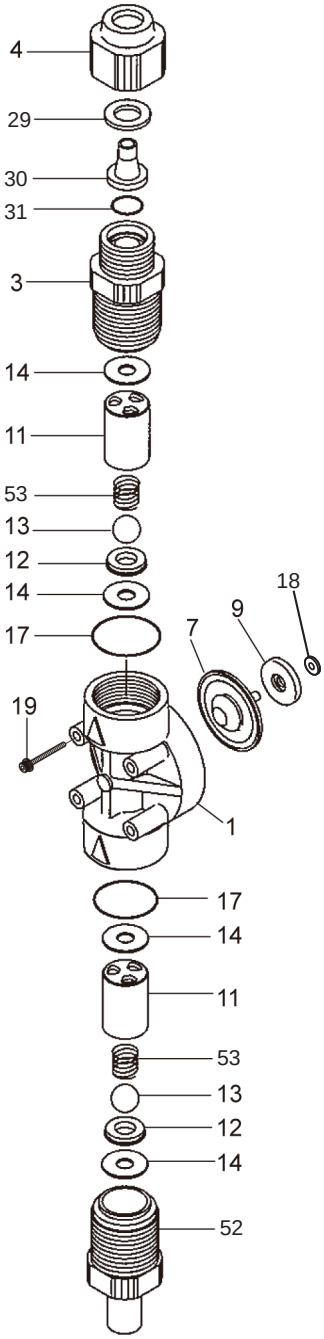

No.	Part names	# of parts
1	Pump head	1
3	Fitting	1
4	Fitting nut	1
7	Diaphragm	1
9	Retainer	1
11	Valve guide	2
12	Valve seat	2
13	Valve	2
14	Valve gasket	4
17	O ring	2
18	Diaphragm spacer	*
19	Hex. socket cap bolt [PW•SW]	4
29	Hose stopper	1
30	Hose adaptor	1
31	O ring	1
52	Suction fitting	1
53	Valve spring	2

*The number of diaphragm spacers varies with pump model.

■ EWP-B/-C/-D VC/VS -A

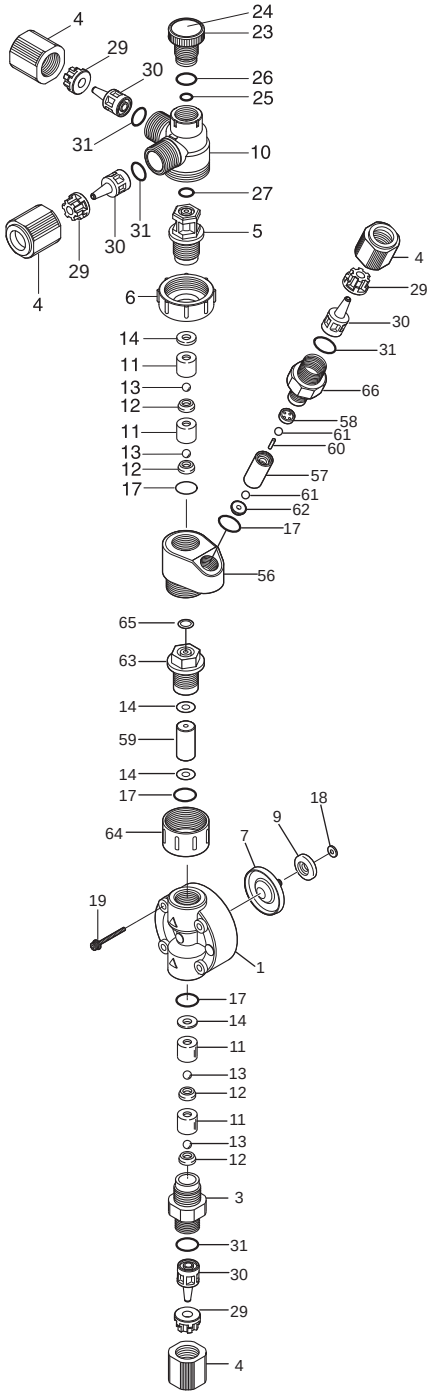

No.	Part names	# of parts
1	Pump head	1
3	Fitting	1
4	Fitting nut	4
5	Air vent body B	1
6	Lock nut	1
7	Diaphragm	1
9	Retainer	1
10	Air vent body A	1
11	Valve guide	4
12	Valve seat	4
13	Valve	4
14	Valve gasket	4
17	O ring	4
18	Diaphragm spacer	*
19	Hex. socket cap bolt [PW•SW]	4
23	Adjusting screw	1
24	Name plate	1
25	O ring	1
26	O ring	1
27	O ring	1
29	Hose stopper	4
30	Hose adapter	4
31	O ring	4
56	Fitting adapter	1
57	Air vent valve guide A	1
58	Air vent valve guide B	1
59	Spacer	1
60	Separate pin	1
61	Valve	2
62	Valve seat	1
63	Air vent body B	1
64	Lock nut	1
65	O ring	1
66	Air vent fitting	1

*The number of diaphragm spacers varies with pump model.

Specifications

Information in this section is subject to change without notice.

■ Pump unit

VC/VS/VE/PC/PS/PE/TC/FC/SH -N

Model code	Max. output capacity mL/min (L/h)	Max. rated discharge pressure MPa	Stroke length % (mm)	Stroke rate % (spm)	Average power cons. W	Average current A	Weight kg
EWP-019A	19 (1.14)	1.2	70-100 (0.7-1.0)	0-100 (0-360)	13	0.8	2.5*3
EWP-038B	38 (2.28)	1.0	50-100 (0.5-1.0)				
EWP-080C	80 (4.80)		40-100 (0.5-1.25)		23	1.1	
EWP-130D	130 (7.80)	0.7					
EWP-270E	270 (16.2)	0.35					
EWP-410F*1	410 (24.6)	0.2					
EWP-420F*2	420 (25.2)						

VC/VS/VE -C (High compression type)

Model code	Max. output capacity mL/min (L/h)	Max. rated discharge pressure MPa	Stroke length % (mm)	Stroke rate % (spm)	Average power cons. W	Average current A	Weight kg
EWP-023B	23 (1.38)	1.0	50-100 (0.625-1.25)	0.1-100 (1-180)	13	0.8	2.5
EWP-054C	54 (3.24)		40-100 (0.6-1.5)		23	1.1	
EWP-078D	78 (4.68)	0.7					

PC/PS/PE/SH -H (High pressure type)

Model code	Max. output capacity mL/min (L/h)	Max. rated discharge pressure MPa	Stroke length % (mm)	Stroke rate % (spm)	Average power cons. W	Average current A	Weight kg
EWP-038B	38 (2.28)	2.0	50-100 (0.5-1.0)	0.1-100.0 (1-360)	23	1.1	2.5*4

PC/PS -V (High viscosity type)

Model code	Max. output capacity mL/min (L/h)	Max. rated discharge pressure MPa	Stroke length % (mm)	Stroke rate % (spm)	Average power cons. W	Average current A	Weight kg
EWP-150E	150 (9.00)	0.5	40-100 (0.5-1.25)	0.1-100.0 (1-240)	23	1.1	2.5

VC/VS -A (Auto degassing type)

Model code	Max. output capacity mL/min (L/h)	Max. rated discharge pressure MPa	Stroke length % (mm)	Stroke rate % (spm)	Average power cons. W	Average current A	Weight kg
EWP-030B	30 (1.80)	1.0	50-100 (0.5-1.0)	0.1-100.0 (1-360)	13	0.8	2.5
EWP-064C	64 (3.84)		40-100 (0.5-1.25)		23	1.1	
EWP-110D	110 (6.60)	0.7					

*Maximum output capacity is rated with clean water at ambient temperature at maximum discharge pressure (also, stroke length 100%, at 360 spm and rated voltage). Output may increase as pressure decreases.

*Allowable room temperature: 0-40°C

*Allowable liquid temperature: 0-40°C for the pumps with VC/VS/VE wet ends (0-60°C for the PC/PS/PE/TC/FC/SH wet ends)

*Allowable ambient humidity: 30-90%RH (non-condensing)

*Allowable power voltage deviation: ±10% of the rated voltage

*Maximum altitude: 2000 m

*Pollution degree: 2

*Maximum noise level: 70 dB at 1 m (A scale)

*1 The EWP-410F with the TC/FC/SH wet ends

*2 The EWP-420F with the VC/VS/VE/PC/PS/PE wet ends

*3 The EWP with the SH wet end is 3.8 kg.

*4 The EWP with the SH-H wet end is 3.2 kg.

■ Control unit

Control modes	MAN (Manual)	0.1-100.0%	
	ANA.P	4-20/20-4/0-20/20-0mA (preset proportional patterns)	
	ANA.V	User-entry set points (output in proportion to 0-20mA)	
	PLS.V	User-entry set points (output in proportion to 0-100/500Hz, 50:50 duty ratio)	
	DIV	n (1-9999) signals per stroke (n = divisor)	
	MULTI	n (1-9999) strokes per signal (n = multiplier)	
	BATCH	The pump runs to meet a batch volume per signal.	
	INT. B	The pump runs to meet a batch volume at a set time interval.	
Displays	LCD	14×5 backlit LCD	Control modes, pump status or so
		7×4 backlit LCD	Output capacity, set value or so
		Others	Flow units, status indicators
	Status LED	Lights white when the pump is in the wait state or menu mode.	
		Blinks green synchronously with strokes when the pump is running.	
		Blinks orange synchronously with strokes when the Pre-STOP signal is input.	
		Turns purple when the STOP signal is input.	
		Turns red when the pump is interlocked.	
Control functions	STOP/ Pre-STOP	Pump keeps running while the Pre-STOP signal is input and stops at the STOP signal input.*1	
	PRIME	Max spm operation while holding down the START/STOP key.	
	Keypad lock	PIN number entry disables the function.	
	Interlock	Pump stops at contact input.	
	AUX	Pump runs at the preset AUX speed.	
	Max capacity setting	The max output capacity of the MAN, EXT, PRIME modes.	
	Buffer memory	MULTI/DIV: Excess pulse signal can be stored up to 65535 shots. ON/OFF is selectable. BATCH: Accumulates the flow volume up to 99.9999L (26.4199gal). ON/OFF is selectable.	
	Current value indication	An input current is displayed during operation in the ANA.V /ANA.P mode.	
Input	STOP/Pre-STOP	Dry contact or Open collector*3	
	AUX	Dry contact or Open collector*3	
	Interlock	Dry contact or Open collector*3	
	Analog	0-20mADC (input resistance 220Ω)	
	Pulse	Dry contact or Open collector*3, UP to 100Hz (factory default, the frequency changes with the bounce threshold.)	

Output	OUT1	Open collector, 30 mA 24 VDC MAX
	Auxiliary DC power	12 VDC, 30 mA
Power voltage	100-240VAC*2	

*1 The factory default setting (the STOP/Pre-STOP signal is activated at contact input) can be changed to “the signal is deactivated at contact input”.

*2 Observe the allowable power voltage range of 90-264VAC. Or failure may result.

*3 The maximum applied voltage to the contact is 5VDC at 2.3mA. The minimum application load of the relay or switch should be 1mA or below.

■ European power cable

Wire size (Cross section area)	0.75 [mm^2] 3-conductor cable (L/N/E)
Length	2000 [mm]
Cable type/standard	H05VV-F
Terminal end	CEE 7/7 plug

■ Australian power cable

Wire size (Cross section area)	1.0 [mm^2] 3-conductor cable (L/N/E)
Length	2000 [mm]
Cable type/standard	H05VV-F
Terminal end	AS/NZ 3112 plug

■ Asian power cable

Wire size (Cross section area)	0.75 [mm^2] 3-conductor cable (L/N/E)
Length	2000 [mm]
Cable type/standard	H05VV-F
Terminal end	Spade terminals (V1.25-YS4A or equivalent)
	Stripped earth wire

■ Pump color

Blue	Munsell color system 7.5PB 3/8

Outer dimensions

■ EWP-019A/-038B/-080C/-130D/-270E/-410F/-420F VC/VS/VE/PC/PS/PE/TC

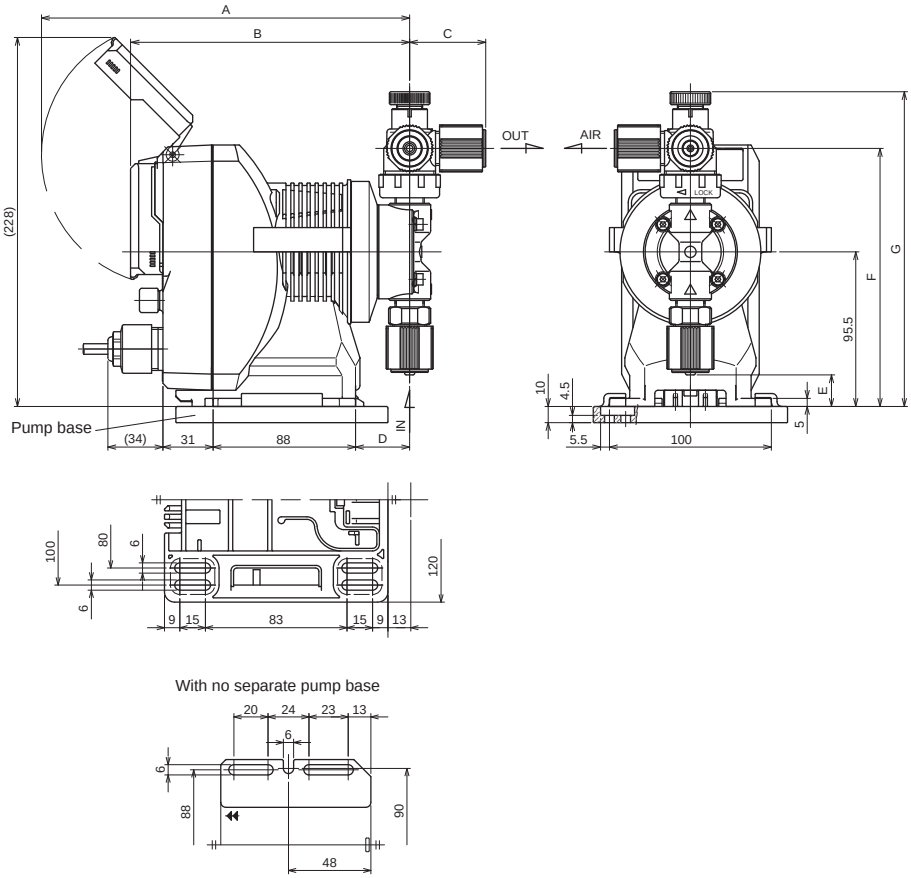

Dimensions in millimetres

Pump unit	A	B	C	D	E	F	G
019A	227	172	47	33	20	159	194
038B							
080C							
130D							
270E	229	174		35	6	172	207
410F/420F						171	206

*The pump with the 09/10 tube-size code has the different dimension C and E. Contact us for more information.

■ EWP-038B/-080C/-130D/-270E/-410F FC

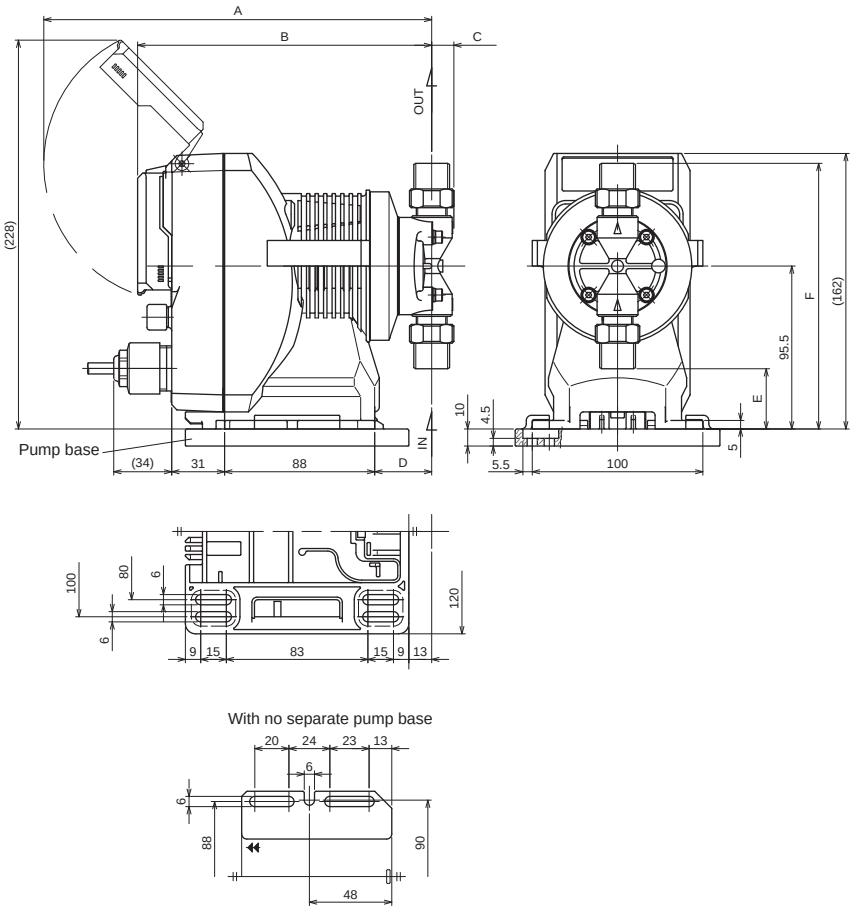

Dimensions in millimetres

Pump unit	A	B	C	D	E	F
038B	227	172	13	33	35	156
080C						
130D						
270E	229	174	16	35	19	173
410F						

■ EWP-038B/-080C/-130D/-270E/-410F SH

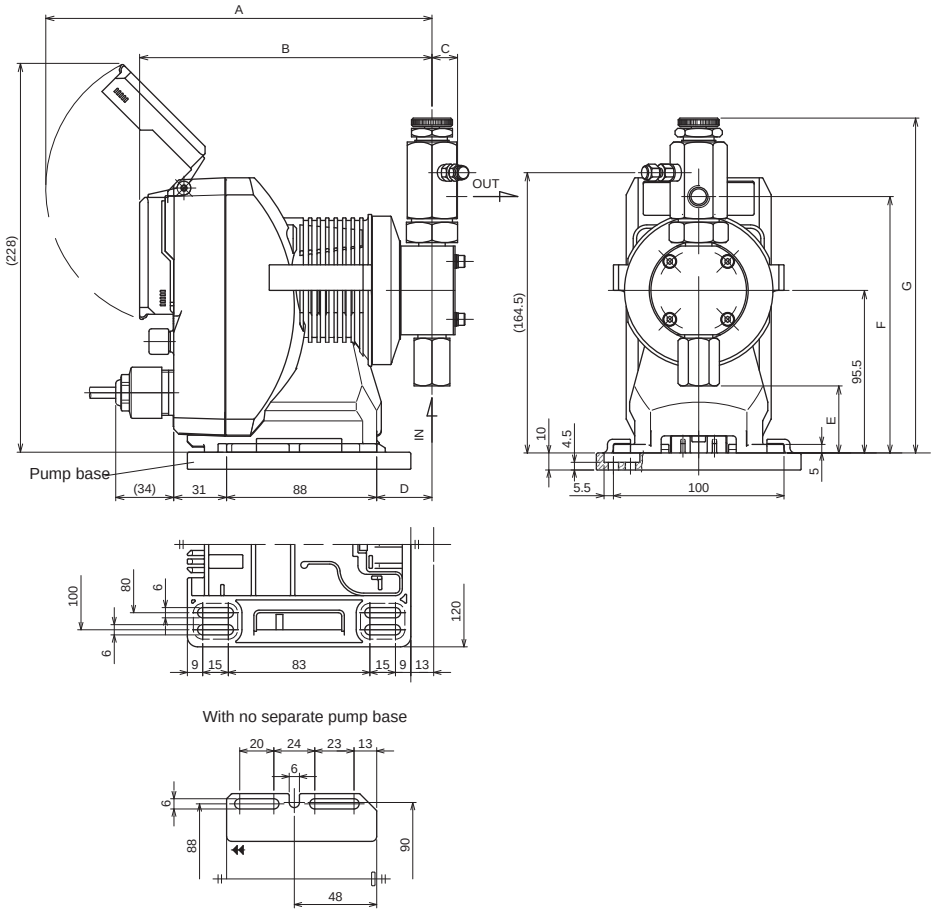

Dimensions in millimetres

Pump unit	A	B	C	D	E	F	G
038B	226	171	15	32	40	151	197
080C							
130D							
270E	228	173		34	30	163	209
410F					27	165	211

■ EWP-023B/-054C/-078D VC/VS/VE -C

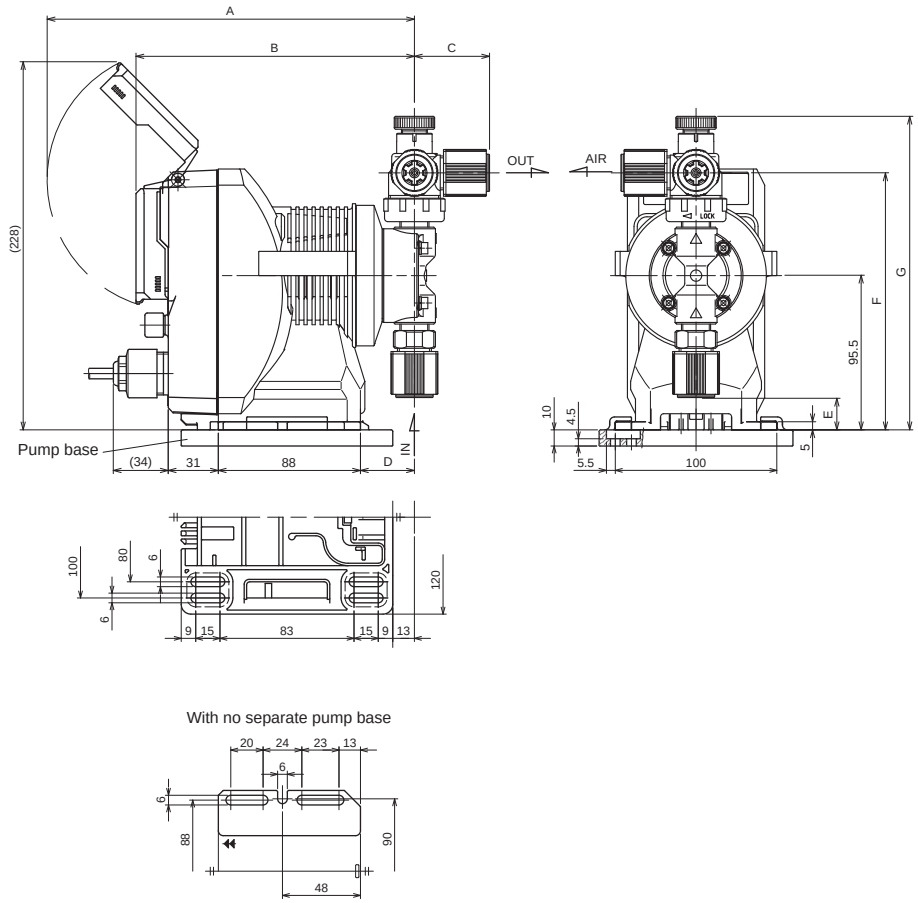

Dimensions in millimetres

Pump unit	A	B	C	D	E	F	G
023B	227	172	47	33	21	159	194
054C							
078D							

*The pump with the 09/10 tube-size code has the different dimension C and E. Contact us for more information.

■ EWP-038B PC/PS/PE -H

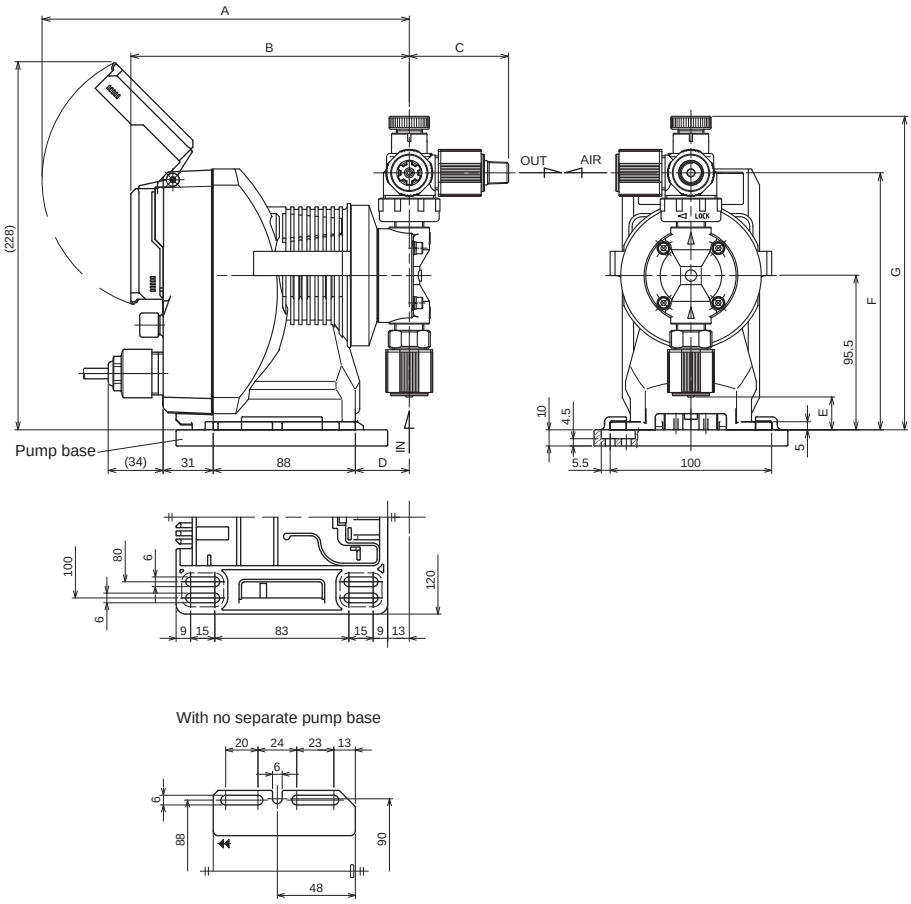

Dimensions in millimetres

Pump unit	A	B	C	D	E	F	G
038B	227	172	62	33	21	159	194

*The pump with the 09/10 tube-size code has the different dimension C and E. Contact us for more information.

■ EWP-038B SH -H

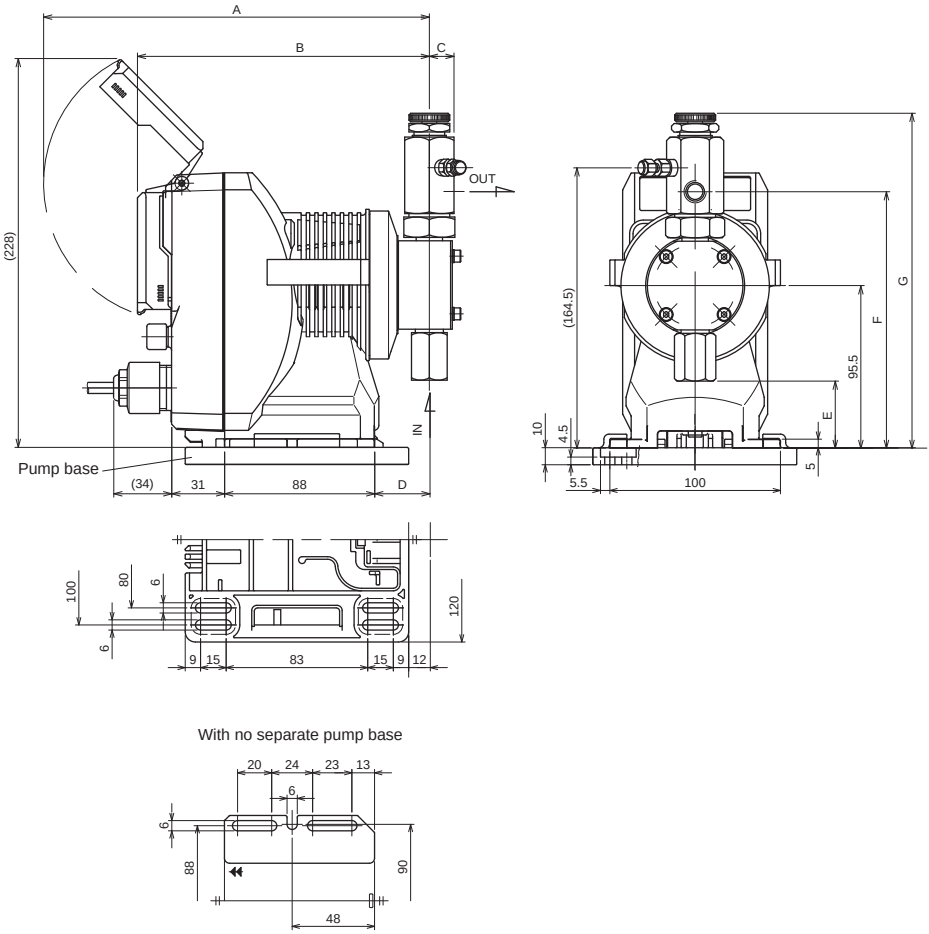

Dimensions in millimeters

Pump unit	A	B	C	D	E	F	G
038B	226	171	15	32	40	151	197

■ EWP-150E PC/PS -V

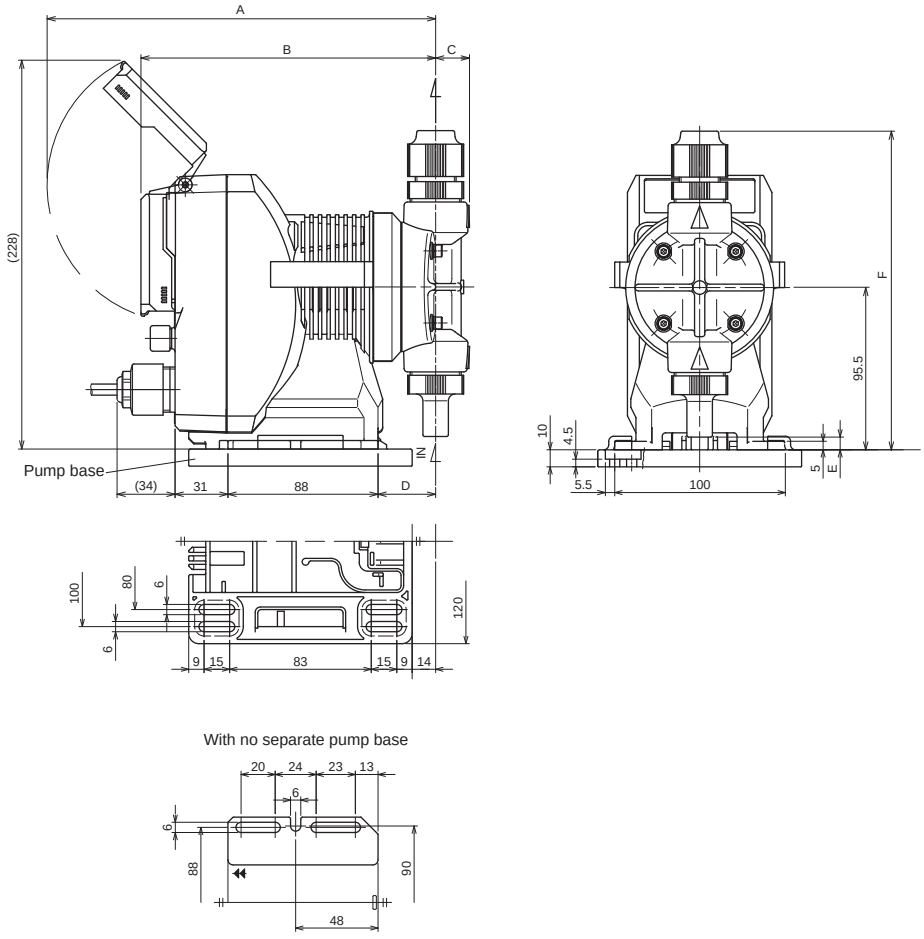

Dimensions in inches (mm)

Pump unit	A	B	C	D	E	F
150E	228	173	19	34	8	188

■ EWP-030B/064C/110D VC/VS-A

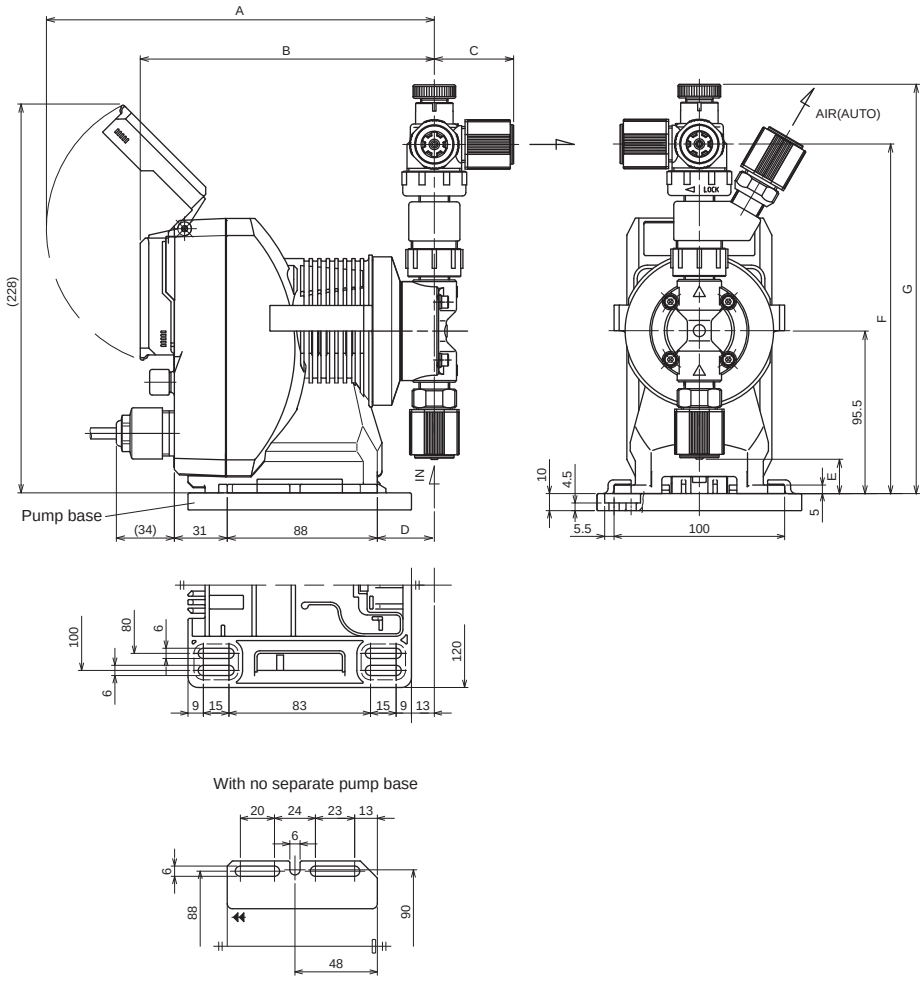

Dimensions in millimeters

Pump unit	A	B	C	D	E	F	G
030B	227	172	47	33	21	205	240
064C							
110D							

EC DECLARATION OF CONFORMITY

A copy of the original Declaration of Conformity

(SUPPLIER'S NAME)

WE

IWAKI CO.,LTD.

(ADDRESS)

6-6 2-CHOME KANDA-SUDACHO CHIYODA-KU TOKYO JAPAN

(PRODUCT)

DECLARE UNDER OUR SOLE RESPONSIBILITY THAT THE PRODUCTS

ELECTROMAGNETIC METERING PUMP

(MODEL NAME)

EWP SERIES

TO WHICH THIS DECLARATION RELATES ARE IN CONFORMITY WITH THE FOLLOWING STANDARDS OR DIRECTIVES AS FAR AS APPLICABLE

(DIRECTIVES)

MACHINERY DIRECTIVE 2006/42/EC (ANNEX IIA)
EMC DIRECTIVE 2014/30/EU
RoHS DIRECTIVE 2011/65/EU

(STANDARDS)

EN ISO12100:2010 EN61000-6-2:2005 EN IEC63000:2018
EN809:1998+A1:2009 EN61000-6-4:2007+A1:2011

(A PERSON WHO IS AUTHORISED TO COMPILE THE TECHNICAL FILE IN THE COMMUNITY)

IWAKI EUROPE GMBH
SIEMENSRING 115 D-47877 WILLICH GERMANY

NOTE: THIS DECLARATION BECOMES INVALID IF TECHNICAL OR OPERATIONAL MODIFICATIONS ARE INTRODUCED WITHOUT THE MANUFACTURER'S CONSENT.

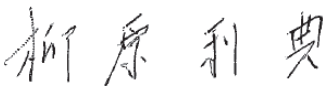

TOSHINORI YANAGIHARA
EXECUTIVE OFFICER SENIOR GENERAL MANAGER,
ENGINEERING HEAD OFFICE

Tokyo, Aug. 30, 2024

(PLACE AND DATE OF ISSUE) **(NAME AND SIGNATURE OR EQUIVALENT MARKING OF AUTHORIZED PERSON)**

DOCUMENT NO. IS-51K-621

UK DECLARATION OF CONFORMITY

A copy of the original Declaration of Conformity

(SUPPLIER'S NAME)

WE

IWAKI CO.,LTD.

(ADDRESS)

6-6 2-CHOME KANDA-SUDACHO CHIYODA-KU TOKYO JAPAN

(PRODUCT)

DECLARE UNDER OUR SOLE RESPONSIBILITY THAT THE PRODUCTS

ELECTROMAGNETIC METERING PUMP

(MODEL NAME)

EWP SERIES

TO WHICH THIS DECLARATION RELATES ARE IN CONFORMITY WITH THE FOLLOWING REGULATIONS OR STANDARDS AS FAR AS APPLICABLE

(REGULATIONS)

S.I. 2008/1597 SUPPLY OF MACHINERY (SAFETY)
S.I. 2016/1091 ELECTROMAGNETIC COMPATIBILITY
S.I. 2012/3032 RESTRICTION OF HAZARDOUS SUBSTANCES

(STANDARDS)

EN ISO12100:2010 EN61000-6-2:2005 EN IEC63000:2018
EN809:1998+A1:2009 EN61000-6-4:2007+A1:2011

(A PERSON WHO IS AUTHORISED TO COMPILE THE TECHNICAL FILE IN THE GB MARKET)

SENSYS LIMITED
UNIT 9 POND CLOSE WALKERN ROAD
STEVENAGE HERTS SG1 3QP UK

NOTE: THIS DECLARATION BECOMES INVALID IF TECHNICAL OR OPERATIONAL MODIFICATIONS ARE INTRODUCED WITHOUT THE MANUFACTURER'S CONSENT.



TOSHINORI YANAGIHARA
EXECUTIVE OFFICER SENIOR GENERAL MANAGER,
ENGINEERING HEAD OFFICE

Tokyo, Aug. 30, 2024

(PLACE AND DATE OF ISSUE) **(NAME AND SIGNATURE OR EQUIVALENT MARKING OF AUTHORIZED PERSON)**

DOCUMENT NO. IS-51K-622

Anchorage points guide (Wall-mount use of the pump base)

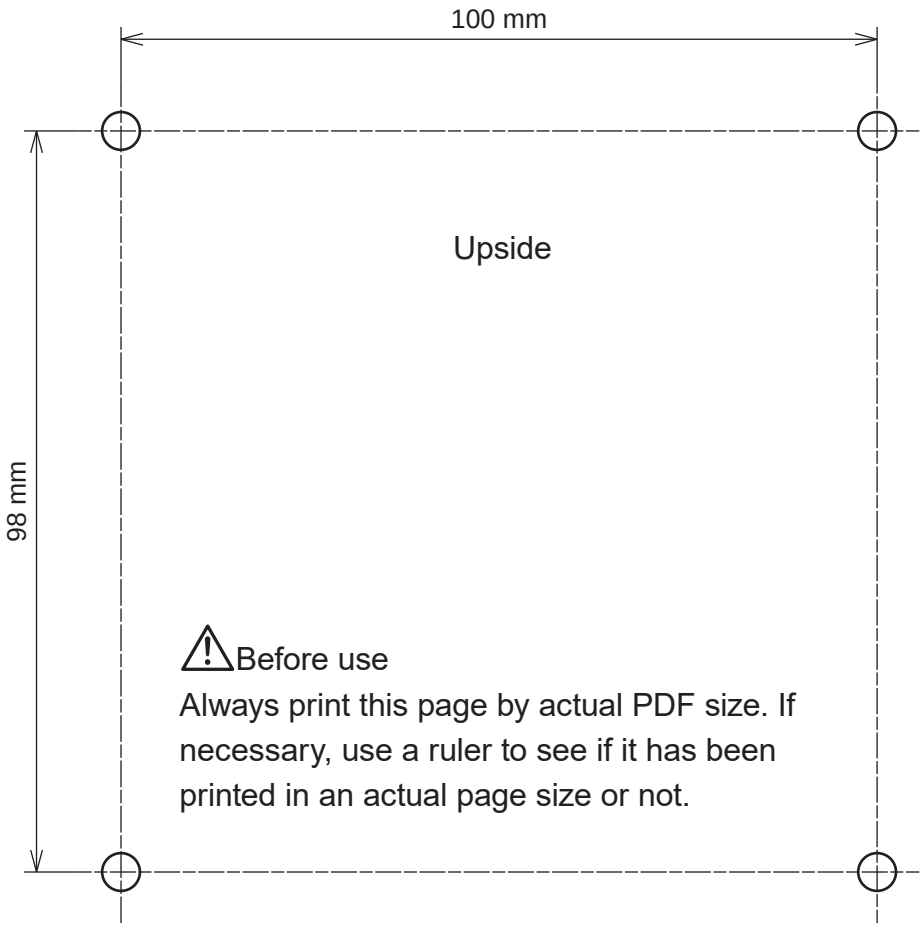

*Use this page and drill the wall for wall mounting with the base of the pump. Copy or cut as necessary. Use a proper drill size for the wall to have M5 anchor nut. Always select the rigid wall for wall-mounting of the pump. Do not drop. It's not the manufacturer's responsibility for any failure or damage resulting from a dropped pump.

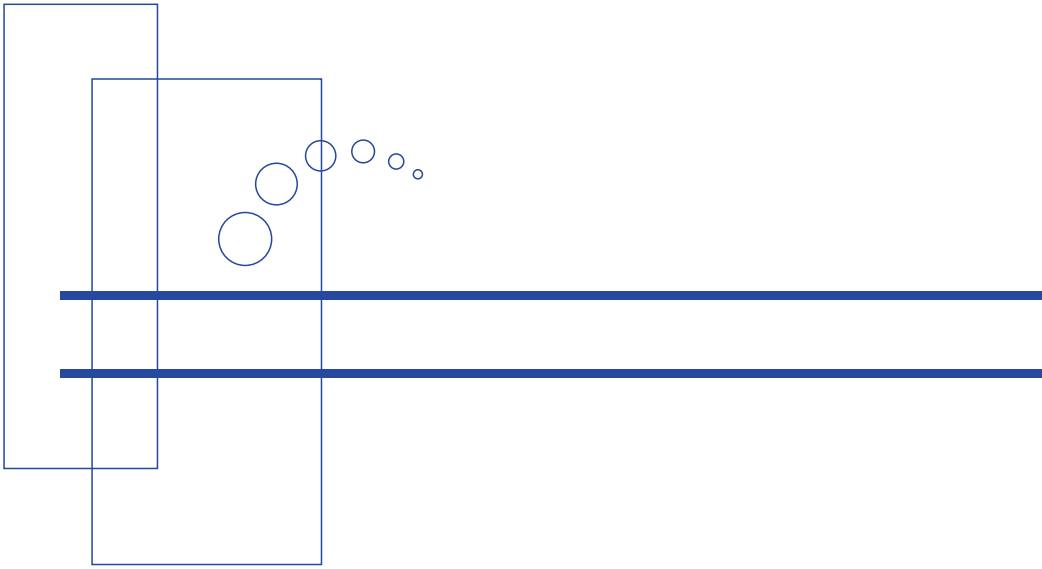

IWAKI

https://www.iwakipumps.jp

IWAKI CO.,LTD. 6-6 Kanda-Sudacho 2-chome Chiyoda-ku Tokyo 101-8558 Japan
TEL: +81 3 3254 2935 FAX: +81 3 3252 8892

European Headquarter / IWAKI Europe GmbH
TEL: +49 2154 9254 0 FAX: +49 2154 9254 48

Germany / IWAKI Europe GmbH
TEL: +49 2154 9254 50 FAX: +49 2154 9254 55

The Netherlands / IWAKI Europe GmbH (Netherlands Branch)
TEL: +31 74 2420011 FAX: +49 2154 9254 48

Italy / IWAKI Europe GmbH (Italy Branch)
TEL: +39 0445 561219 FAX: +39 0445 569088

Spain / IWAKI Europe GmbH (Spain Branch)
TEL/FAX: +34 934 741 638

Poland / IWAKI Europe GmbH (East Europe Branch)
TEL: +48 12 347 0755 FAX: +48 12 347 0900

Denmark / IWAKI Nordic A/S
TEL: +45 48 242345

Finland / IWAKI Suomi Oy
TEL: +358 10 201 0490

Norway / IWAKI Norge AS
TEL: +47 23 38 49 00

Sweden / IWAKI Sverige AB
TEL: +46 8 511 72900

Belgium / IWAKI Belgium N.V.
TEL: +32 13 670200 FAX: +32 13 672030

France / IWAKI France S.A.
TEL: +33 1 69 63 33 70 FAX: +33 1 64 49 92 73

U.S.A. / IWAKI America Inc.
TEL: +1 508 429 1440 FAX: +1 508 429 1386

Brazil / IWAKI Do Brasil Comercio De Bombas Hidraulicas LTDA.
TEL/FAX: +55 19 3244 5900

China (Shanghai) / IWAKI Pumps (Shanghai) Co., Ltd.
TEL: +86 21 6272 7502 FAX: +86 21 6272 6929

China (Hong Kong) / IWAKI Pumps Co., Ltd.
TEL: +852 2607 1168 FAX: +852 2607 1000

China (Guangzhou) / GFTZ IWAKI Engineering & Trading Co., Ltd.
TEL: +86 20 84350603 FAX: +86 20 84359181

China (Shenzhen) / IWAKI Pumps (Shenzhen) Co., Ltd.
TEL: +86 0755 8656 3696

Singapore / IWAKI Singapore Pte Ltd.
TEL: +65 6316 2028 FAX: +65 6316 3221

Indonesia / IWAKI Singapore Pte Ltd. (Indonesia Office)
TEL: +62 21 6906606 FAX: +62 21 6906612

Malaysia / IWAKIm SDN. BHD.
TEL: +60 3 7803 8807 FAX: +60 3 7803 4800

Korea / IWAKI Korea Co., Ltd.
TEL: +82 2 6238 4800 FAX: +82 2 6238 4801

Taiwan / IWAKI Pumps Taiwan Co., Ltd.
TEL: +886 2 8227 6900 FAX: +886 2 8227 6818

Thailand / IWAKI (Thailand) Co., Ltd.
TEL: +66 2 322 2471 FAX: +66 2 322 2477

Australia / IWAKI Pumps Australia Pty Ltd.
TEL: +61 2 9899 2411 FAX: +61 2 9899 2421

T1223-4 '26/09