IWAKI PUMPS

IWAKI Air Pump

APN-085

Instruction Manual

⚠ Read this manual before use of product

Thank you for selecting an IWAKI APN-085 air pump. This instruction manual deals with "*Safety Instructions*", "*Outline*", "*Installation*", "*Operation*" and "*Maintenance*" sections.

Please read through this instruction manual to ensure the optimum performance, safety and service of your pump.

Contents

Safety Instructions ····· **1**

Outline
1. Unpacking & Inspection ····· 4
2. Operating principle ····· 5
3. Identification code ····· 6
4. Specifications ····· 7
5. Outer dimension ····· 10
6. Performance curve ····· 13
7. Overview & Label ····· 14
8. Part names & Structure ····· 14

Installation
1. Before installation ····· 17
2. Installation/Tubing/Electrical wiring ····· 19

Operation
1. Before operation ····· 21
2. Pump operation ····· 22

Maintenance
1. Troubleshooting ····· 24
2. Maintenance & Inspection ····· 24
3. Wear part replacement ····· 25

EC DECLARATION OF CONFORMITY ····· 28

Waste Electrical and Electronic Equipment (WEEE) ····· 28

This instruction manual should be kept on hand by the end user for quick reference.

Contact us or your nearest dealer if you have any questions.

Important Instruction

For the Safe and Correct Handling of the Pump

- "Safety Instruction" section deals with important details about handling of the product. Before use, read this section carefully for the prevention of personal injury or property damage.
- Observe the instructions accompanied with "WARNING" or "CAUTION" in this manual. These instructions are very important for protecting pump users from dangerous situations.
- The symbols on this instruction manual have the following meanings:

⚠ **WARNING**	**Nonobservance or misapplication of the contents of "Warning" section could lead to a serious accident which may result in death.**
⚠ **CAUTION**	**Nonobservance or misapplication of the contents of "Caution" section could lead to personal injury or property damage.**

Types of Symbols

⃠	Indicates a prohibited action or procedure. Inside or near this circle, a concrete and practical image of the activity to be avoided is depicted.
!	Indicates an important action or procedure which must be performed or carried out without fail. Failure to follow the instructions herein can lead to malfunction or damage to the pump.

⚠Export Restrictions

Technical information contained in this instruction manual might be treated as controlled technology in your countries, due to agreements in international regime for export control.
Please be reminded that export license/permission could be required when this manual is provided, due to export control regulations of your country.

Safety Instructions

⚠ WARNING

- **Turn off power before service**
  Risk of electrical shock. Be sure to turn off power to stop the pump and related devices before service is performed.


Electrical shock

- **Do not use the pump in any condition other than its intended purpose**
  The use of the pump in any conditions other than those clearly specified may result in failure or injury. Use this product in specified conditions only.


Prohibited

- **Do not modify the pump**
  Alternations to the pump carry a high degree of risk. It is not the manufacturer's responsibility for any failure or injury resulting from alterations to the pump.


No remodeling

- **Wear protective clothing**
  Always wear protective clothing such as an eye protection, chemical resistant gloves, a mask and a face shield during disassembly, assembly or maintenance work.


Wear protectors

⚠ WARNING

- **Use specified power only**
  Do not apply power other than that specified on the nameplate. Otherwise failure or fire may result. Ensure the pump is properly grounded.



- **Do not damage the power cable**
  Do not pull, knot, or crush the power cable. Damage to the power cable could lead to a fire or electrical shock if cut or broken.


Prohibited

- **Do not operate the pump in a flammable atmosphere**
  Do not place explosive or flammable material near the pump.


Prohibited

⚠ CAUTION

- **Qualified personnel only**

  The pump should be handled or operated by qualified personnel with a full understanding of the pump. Any person not familiar with the product should not take part in the operation or maintenance of the pump.



- **Ventilation**

  Fumes or vapours can be hazardous. Ensure proper ventilation at the operation site.



- **Do not install/store the pump:**
  - Where ambient temperature can exceed 0-40ºC.
  - In a flammable/corrosive atmosphere.
  - In a dusty/humid place.



- **Gas leak precautions**

  Ensure containment of gas in the event of plumbing or pump damage (secondary containment).



⚠ CAUTION

- **Keep electric parts and wiring dry**

  Risk of fire or electric shock. Install the pump where it can be kept dry.



- **Do not use a damaged pump**

  Use of a damaged pump could lead to an electric shock or death.



- **Stop operation**

  If you notice any abnormal or dangerous conditions, suspend operation immediately and inspect/solve problems.



- **Grounding**

  Risk of electric shock! Always properly ground the pump. Conform to local electric codes.



- **Do not use the pump in a wet location**

  The pump is not waterproof. Use of the pump in wet or extremely humid locations could lead to electric shock or short circuit.



⚠ CAUTION

- **Do not touch the pump or pipe with bare hands**
  Risk of burns. The surface temperature of the pump or piping becomes very high during and immediately after operation, depending on the gas temperature.



- **Electromagnetic precautions**
  This product is not protected against electromagnetic fields. Take appropriate measures as necessary.



- **The power cable is not replaceable**
  Do not use a damaged power cable, as it may result in fire or electric shock. If the cable is damaged, the entire pump unit must be replaced.



- **Disposal of a used pump**
  Dispose of any used or damaged pump in accordance with local rules and regulations. See page 28 to comply with the European Directive 2012/19/EU on waste electrical and electronic equipment.



⚠ CAUTION

- **Release the pressure from the discharge line**
  Solution in the discharge line may be under pressure. Release the pressure from the discharge line before disconnecting plumbing or disassembly of the pump to avoid gas leakage.



- **Preventative maintenance**
  Follow instructions in this manual for replacement of wear parts. Do not disassemble the pump beyond the extent of the instructions.



- **Install a GFCI (earth leakage breaker)**
  An electrical failure of the pump may adversely affect other devices on the same line. Purchase and install a GFCI (earth leakage breaker) separately.



- **Potentially-flammable/-explosive gas**
  When using this pump for handling a potentially-flammable or potentially-explosive gas, users must take all necessary measures with their equipment so such a gas is handled safely.



Before use, check the specification, limitation and hazardous nature of the pump.

1. Unpacking & Inspection

Open the package and check that the product conforms to your order. If any problem or inconsistency is found, immediately contact your distributor.

1. Check the nameplate to see if the information such as model codes, discharge capacity and discharge pressure are as ordered.

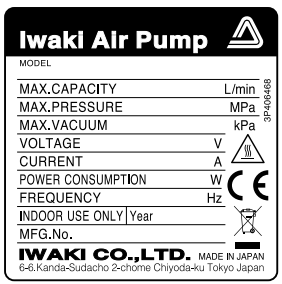

Spec label for the European market

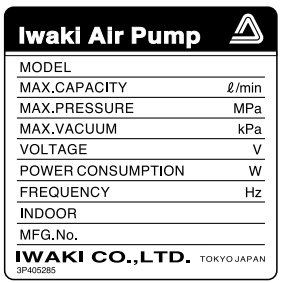

Spec label for any area other than the European market

*The CE marking on our product(s) is for us to market the product(s) into the European market, however, the CE marking does not ensure any safety or conformity of the product(s) outside the European market.
When the pump is incorporated into the equipment marketed in the European market, such equipment must meet all the requirements of applicable directives.
In such a case, any person who places the equipment on the market must carry a CE mark on the equipment as a manufacturer.

2. Check for transit damage, deformation and loose bolts.

2. Operating principle

The APN-085 is a diaphragm type air pump and is designed to be built into various devices such as a gas analyser and used for contamination-free gas compression, vacuum and delivery.

The rotary motion of the motor is converted via a connecting rod to the reciprocation of the diaphragm in the pump chamber, where gas is transferred from the inlet to outlet.

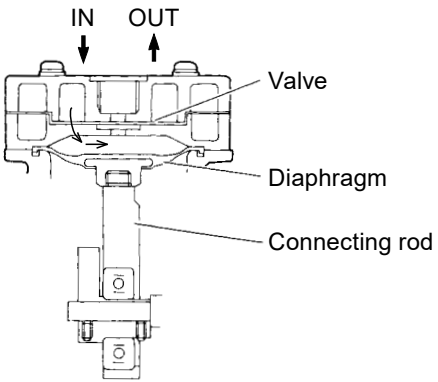

3. Identification code

APN - S 085 L N X - 1 - 02
a b c d e f g

a. Pump head
- No code : Single head
- S : Dual-head with In-line tubing
- P : Dual-head with parallel tubing

b. Series code

c. Intended use
- No code : Corrosion resistant (FKM/EPDM coated diaphragm)
- L : High vacuum (horizontally-oriented pump head)
- H : High vacuum (vertically-oriented pump head)

d. Diaphragm/Valve materials
- N : NBR
- E : EPDM
- V : FKM

e. Pump connection
- No code : Tube connection (8 mm O.D.)
- X : Rc1/4 female thread connection (JIS taper pipe thread)
- X1 : G1/4 female thread connection (JIS parallel pipe thread)

f. Power voltage
- 1 : 100 VAC
- 2 : 200 VAC
- 3 : 115 VAC
- 4 : 220/240 VAC
- E4 : 220/240 VAC (3-core cabtyre cable)

g. Special specification
- No code : Standard
- 01-99 : Special design

4. Specifications

■ Pump 50/60Hz

<table>
<tr><th rowspan="2">Type</th><th rowspan="2">Max. air flow (L/min)</th><th rowspan="2">Max. discharge pressure (MPa)</th><th rowspan="2">Max. vacuum (kPa) abs.</th><th colspan="2">Connection</th><th rowspan="2">Weight (kg)</th><th rowspan="2">Lowest starting temp. (°C)</th></tr>
<tr><th>Tube</th><th>Thread</th></tr>
<tr><td>APN-085V</td><td rowspan="5">5/6</td><td rowspan="8">0.08</td><td>61.32</td><td rowspan="11">8mm O.D.</td><td rowspan="11">Rc1/4 or G1/4 female thread connection</td><td rowspan="4">1.9</td><td>10</td></tr>
<tr><td>APN-085E</td><td>5</td></tr>
<tr><td>APN-085LV/HV</td><td rowspan="3">34.66</td><td rowspan="2">0</td></tr>
<tr><td>APN-085LE/HE</td></tr>
<tr><td>APN-085LN/HN</td><td rowspan="4">2.6</td></tr>
<tr><td>APN-P085LV/HV</td><td rowspan="3">10/12</td><td>5</td></tr>
<tr><td>APN-P085LE/HE</td><td rowspan="2">0</td></tr>
<tr><td>APN-P085LN/HN</td></tr>
<tr><td>APN-S085LV</td><td rowspan="3">5/6</td><td rowspan="3">-</td><td rowspan="3">7.99</td><td rowspan="3">5</td></tr>
<tr><td>APN-S085LE</td></tr>
<tr><td>APN-S085LN</td></tr>
</table>

NOTE 1. Allowable maximum discharge pressure is 0.08 MPa.
NOTE 2. Allowable gas temperature range is 0-40 °C.
NOTE 3. Allowable ambient temperature range is 0-40 °C. Observe the lowest starting temperature.
NOTE 4. The APN-S085L with a dual pump head with in-line tubing is used for a vacuum purpose only.
NOTE 5. Allowable maximum noise level is 50 dB at 1 m (A scale).

■ Motor

Type	Input power (W)				Output power (W)	Power current (A)			
	100V	115V	200V	220/240V	100/115/200/220/240V	100V	115V	200V	220/240V
APN-085V	20/20 (50/60Hz)	25 (60Hz)	24/25 (50/60Hz)	29 (50Hz)	10	0.25/0.25 (50/60Hz)	0.22 (60Hz)	0.13/0.13 (50/60Hz)	0.11 (50Hz)
APN-085E									
APN-085LV/HV									
APN-085LE/HE									
APN-085LN/HN									
APN-P085LV/HV	35/38 (50/60Hz)	38 (60Hz)	35/38 (50/60Hz)	38 (50Hz)	15	0.4/0.4 (50/60Hz)	0.3 (60Hz)	0.2/0.2 (50/60Hz)	0.15 (50Hz)
APN-P085LE/HE									
APN-P085LN/HN									
APN-S085LV									
APN-S085LE									
APN-S085LN									

■ Gas contact materials

Codes / Part names	LN/HN	V	LV/HV	E	LE/HE
Pump head	GFRPP				
Diaphragm	NBR	FKM		EPDM	
Valve					
Valve seat	GFRPP				
Retainer plate	GFRPPS	-	GFRPPS	-	GFRPPS
Screw	SUS304 or equiv.	-	SUS304 or equiv.	-	SUS304 or equiv.
Seal gasket*	FKM	-	FKM	-	FKM

NOTE: The seal gasket is provided to the X1 type (G1/4 female thread connection type) only.

GFRPP : Glass fibre reinforced polypropylene
NBR : Nitrile-butadiene rubber
FKM : Fluorine-contained rubber
EPDM : Ethylene propylene diene monomer
GFRPPS : Glass fibre reinforced polypropylene sulfide
SUS304 : Austenite stainless steel

5. Outer dimension

■ APN-085 (mm)

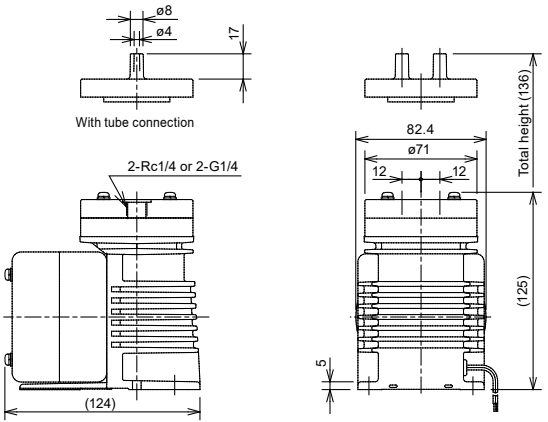

■ APN-085L (mm)

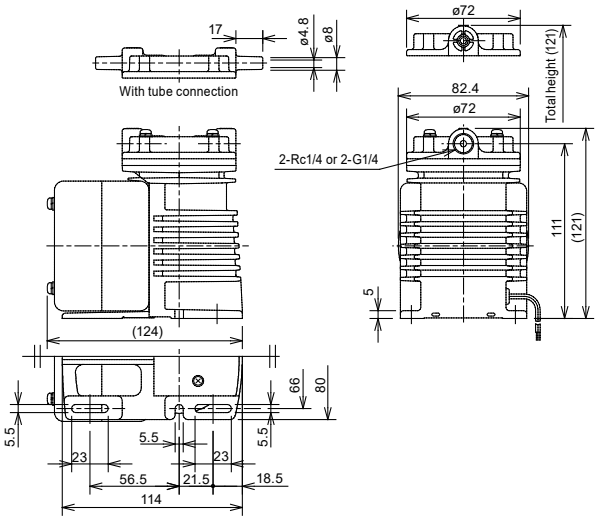

■ APN-085H (mm)

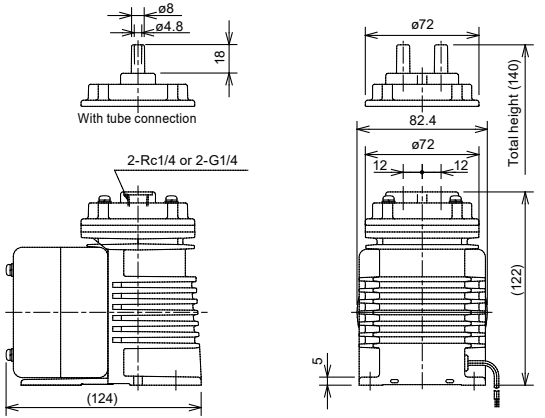

■ APN-P085H (mm)

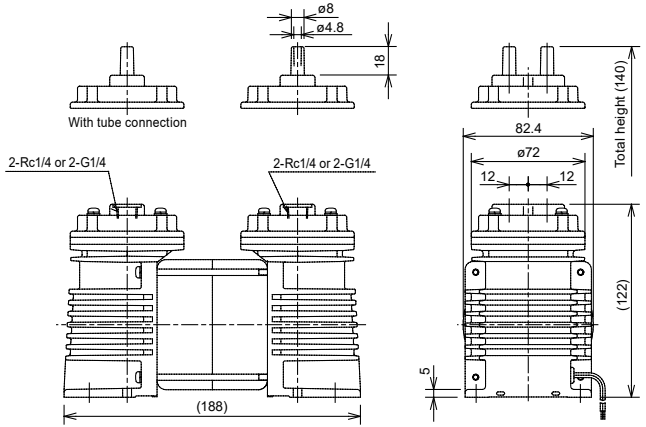

■ APN-P085L (mm)

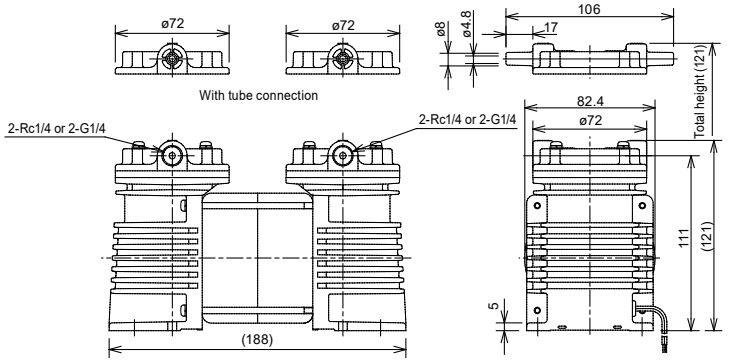

■ APN-S085L (mm)

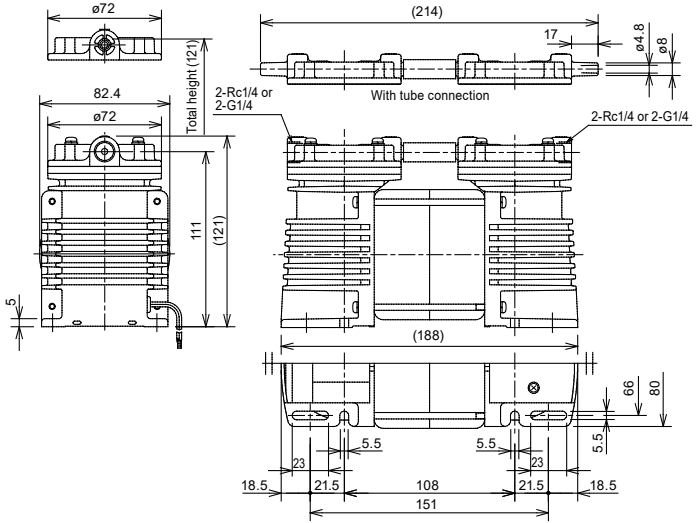

6. Performance curve

■ APN-085

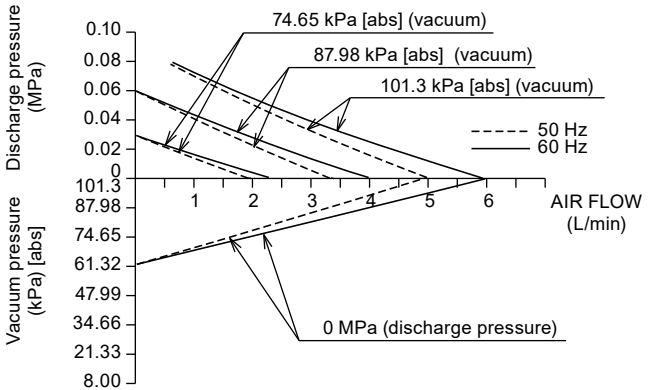

■ APN-P085L/H

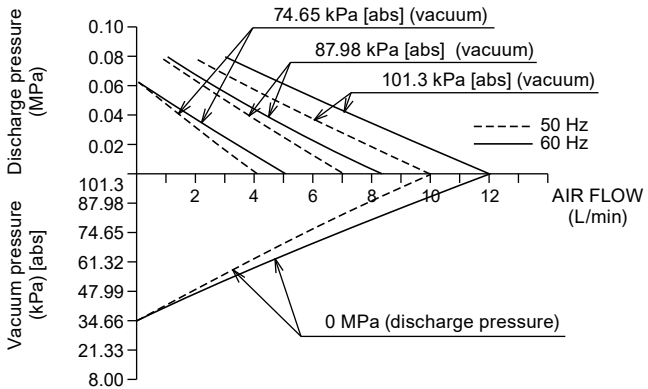

■ APN-085L/H

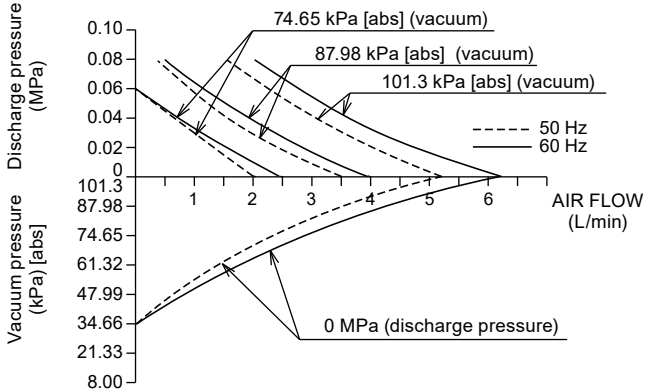

■ APN-S085L

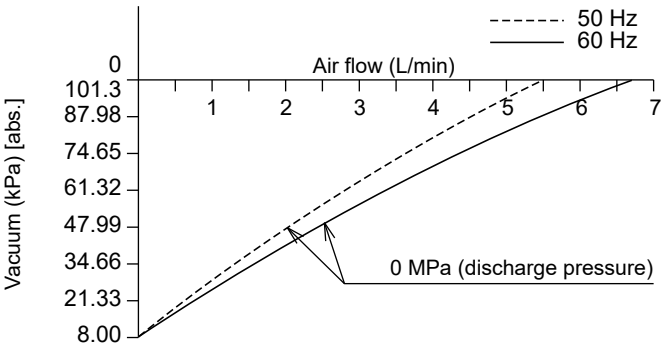

7. Overview & Label

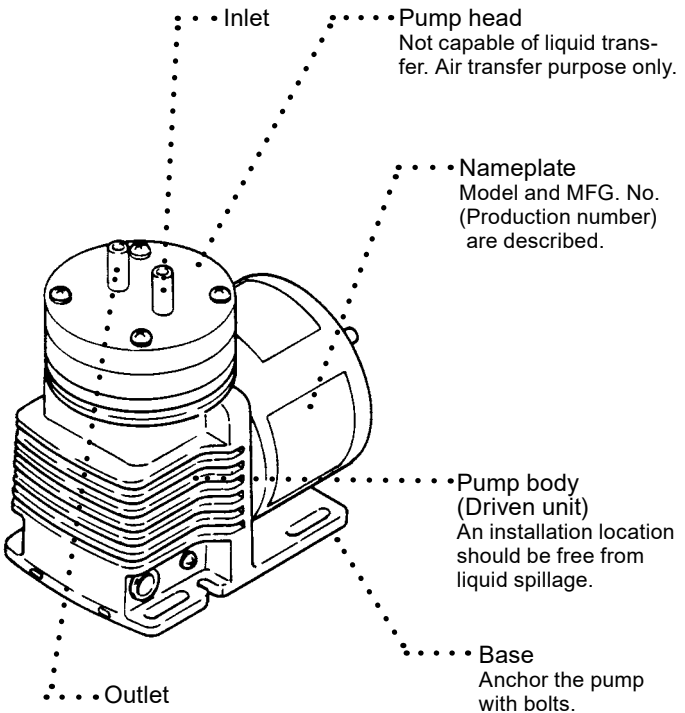

8. Part names & Structure

■ APN-085

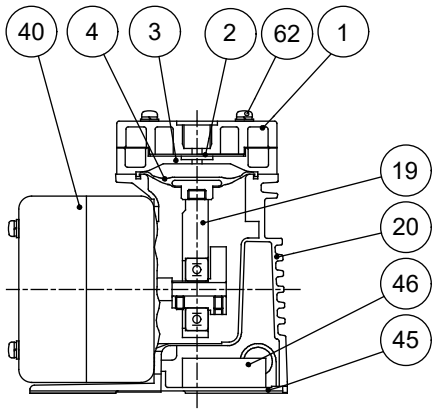

#	Part names	Q'ty	#	Part names	Q'ty
1	Pump head	1	20	Bracket	1
2	Valve	1	40	Motor	1
3	Valve seat	1	45	Capacitor cover	1
4	Diaphragm	1	46	Capacitor	1
19	Connecting rod	1	62	Screw w/ washer	4

■ APN-085 L/H

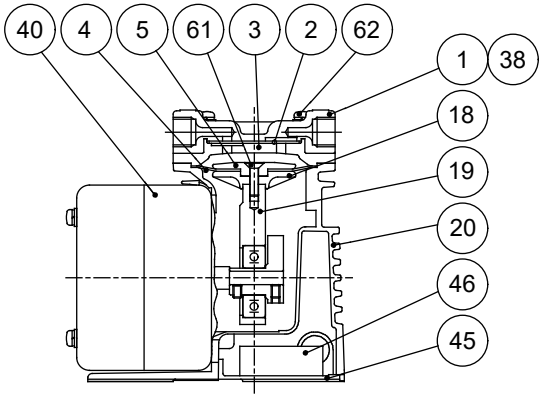

#	Part names	Q'ty	#	Part names	Q'ty
1	Pump head	1	20	Bracket	1
2	Valve	1	38	Gasket*	2
3	Valve seat	1	40	Motor	1
4	Diaphragm	1	45	Capacitor cover	1
5	Retainer plate	1	46	Capacitor	1
18	Under retainer plate	1	61	Screw	1
19	Connecting rod	1	62	Screw w/ washer	4

*The parts marked with * are provided to the pumps with G1/4 female thread connection (X1).

■ APN-P 085 L/H

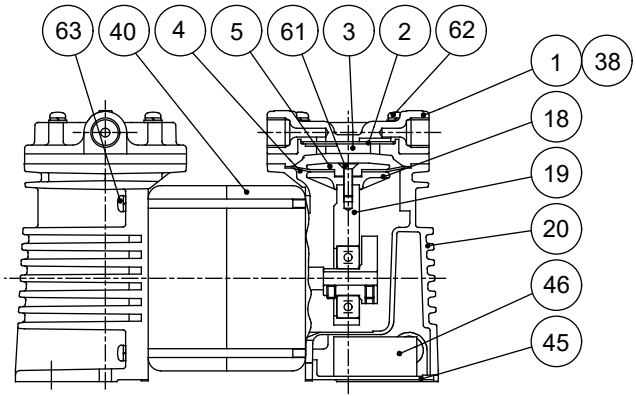

#	Part names	Q'ty	#	Part names	Q'ty
1	Pump head	2	22	Bracket B	1
2	Valve	2	38	Gasket*	4
3	Valve seat	2	40	Motor	1
4	Diaphragm	2	45	Capacitor cover	1
5	Retainer plate	2	46	Capacitor	1
18	Under retainer plate	2	61	Screw	2
19	Connecting rod	2	62	Screw w/ washer	8
21	Bracket A	1	63	Screw w/ washer	4

*The parts marked with * are provided to the pumps with G1/4 female thread connection (X1).

■ APN-S 085 L

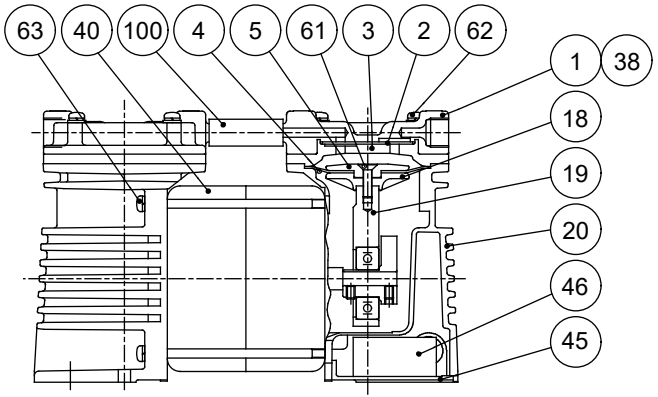

#	Part names	Q'ty	#	Part names	Q'ty
1	Pump head	2	38	Gasket*	2
2	Valve	2	40	Motor	1
3	Valve seat	2	45	Capacitor cover	1
4	Diaphragm	2	46	Capacitor	1
5	Retainer plate	2	61	Screw	2
18	Under retainer plate	2	62	Screw w/ washer	8
19	Connecting rod	2	63	Screw w/ washer	4
21	Bracket A	1	100	Hose	1
22	Bracket B	1			

*The parts marked with * are provided to the pumps with G1/4 female thread connection (X1).

1. Before Installation

Read through instructions in this section to ensure the optimum performance, safety and service of your pump.

⚠ CAUTION

- **Do not operate the pump in a flammable atmosphere**
  Do not place explosive or flammable material near the pump.
- **Do not use a damaged pump**
  Use of a damaged pump could lead to an electric shock or death.

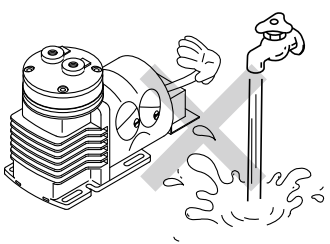

- Install the pump where it can be kept dry. Avoid using wet gas, or internal condensation will build up and consequently result in the short lives of the valve and diaphragm.

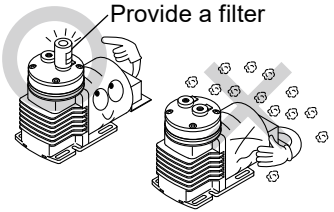

- Do not use the pump in a dusty place. Be sure to provide the inlet with a filter to prevent foreign matters from getting into the pump. Otherwise, the pump performance may reduce or the lives of the valves and diaphragm may remarkably shorten.

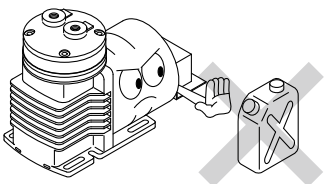

- Do not install the pump in a corrosive or flammable gas atmosphere. Keep good ventilation in a working area.

- Ambient temperature should not fall below 0 °C or exceed 40 °C. Observe the allowable gas temperature range of 0 °C and 40 °C.

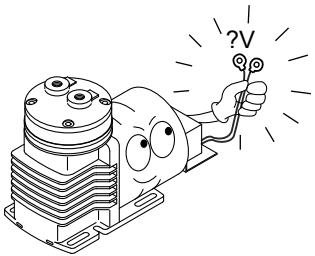

- Observe the rated voltage specified on the name plate. Applying any voltage than the rated one may result in failure.

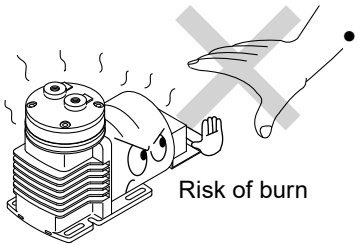

- Surface temperature may rise high in operation. Do not touch the pump body directly or place the objects which may be deformed by heat close to the pump.

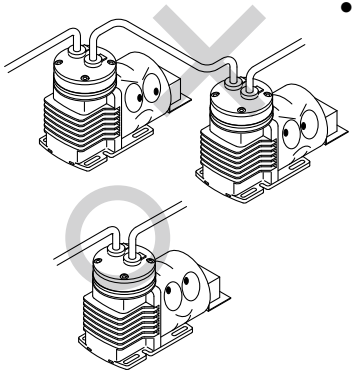

- Do not tube two or more pumps in series. It may prevent the motor from starting and lead to a burnout.

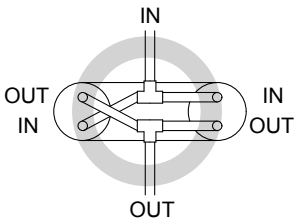

Parrallel tubing

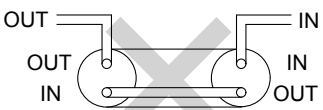

In-line tubing

- The APN-P085 pump (dual-head type with parallel tubing) must be plumbed in parallel. No series tubing is allowed.

2. Installation/ Tubing/ Electrical wiring

⚠ WARNING

If you notice any abnormal or dangerous conditions, suspend operation immediately and inspect/solve problems.

2.1 Installation

1. Installation location

This pump is designed to be built into equipment under proper protection.

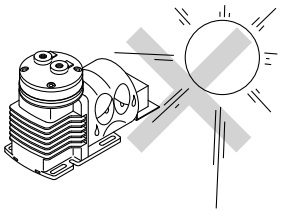

- Do not install the pump in direct sunlight, wind & rain.
- Select a level location, free from vibration, that won't hold liquid.
- Keep good ventilation. The pump should always be free from the possibility of getting wet.
- Ambient temperature should not fall below 0 °C or exceed 40 °C.
- Ambient humidity should not fall below 35 %RH or exceed 90 %RH.
- Allow sufficient space around the pump for easy access and maintenance.

2. Pump fixation

Set the pump baseplate on a concrete foundation and fasten anchor bolts tightly to prevent the pump from vibrating during operation.

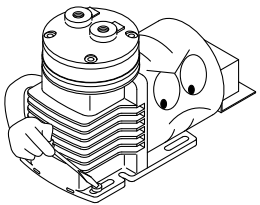

⚠ CAUTION

Do not install the pump on an unstable place.

3. Tube preparation

Cut the tube ends flat beforehand.

2.2 Tubing

1. The short tubing with the minimum bends is optimal to reduce resistance.
2. Use the vinyl tubes sustainable under the maximum possible pressure.

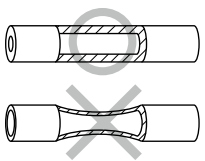

⚠ CAUTION

Do not have tubing bent or pressed. Otherwise, the tube end may break.

3. Select proper tube size, otherwise liquid leaks and failure may result.

⚠CAUTION

Use of a wrong tube size bears the risk of coming off, causing an air leak.

4. Install valves on both discharge and suction lines.
   - Suction valve:
     For adjustment of an air flow and a vacuum.
   - Discharge valve:
     For maintenance and shutoff.

5. Push the tubes into the inlet and outlet as far as they will go.

NOTE: If the suction line connection is imperfect, the pump entrains air and so the full performance will not be achieved.

NOTE: For the pumps with a female thread (X/X1 types), use a suitable tube fitting to secure the connection between the pump and tubing.

2.3 Electrical wiring

Electrical wiring must be performed by a qualified electrician. It is not the manufacture's responsibility for personal injury or property damage resulting from unauthorized service. Contact us or your nearest distributor for wiring as necessary.

■ Before wiring

1. Check that the main power is turned off.
2. Electrical work should be performed in accordance with local electric codes, with an appropriate wire gauge or so.
3. Apply the specified power voltage. See the spec label.
4. Earth the pump through the earth terminal.
5. When an earth leakage breaker is used and has tripped, always investigate and solve root causes. Be sure to unplug the pump before investigation is performed.

1. Before operation



- Use care handling the pump. Do not drop. An impact may affect pump performance.

- The pump can not start with full discharge/suction pressure. Remove pressure before operation.

No load operation

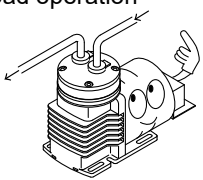

- After a long period of stoppage, pump performance at the beginning of operation becomes occasionally unstable. In this case, warm the pump up for 10 minutes with no discharge line pressure.

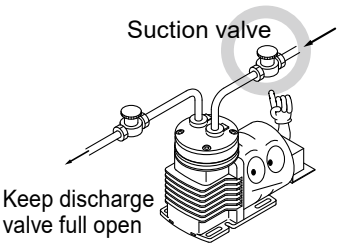

- Always use a suction valve to adjust an air flow.

Keep outlet open-ended

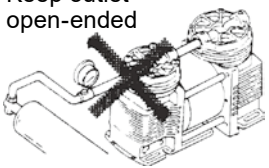

- The APN-S085L (dual-head with In-line tubing type) is used for vacuum application only. The outlet must be open-ended to the atmosphere.

Do not use compressed air to the pump.

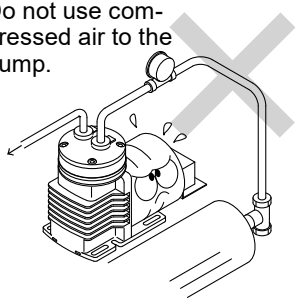

- If the compressed air (higher pressure than atmospheric pressure) is transferred to the pump, sharp deterioration to the lives of the valve, diaphragm and bearing may result. Always keep atmospheric or lower pressure in the suction line.

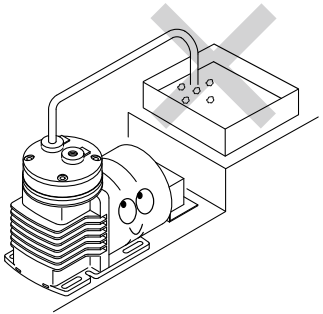

- Injection point must be below the pump position. Or siphon action/back flow may result.

- Do not clean the pump or nameplate with a solvent such as benzine, alcohol or thinner. This may discolour the pump or erase printing. Use a dry or damp cloth or a neutral detergent.

2. Pump operation

■ Start-up

1. Before pump operation, check that each tube connection is secured.
2. Check that a suction line is connected to the inlet and a discharge line to the outlet.

⚠CAUTION

If a suction line and a discharge line are connected the other way around, pumping process is inverted.

3. Check that the pump is firmly fixed on a mounting position.

■ Operation

Operate the pump according to the following steps.

No.	Procedure	Points to be Checked
1	Check tubing, wiring and voltage.	• Check installation, tubing and wiring are properly done and wiring system is fused. • Check the spec label to see if power supply voltage is correct.
2	Open valves.	• Fully open both discharge and suction lines.
3	Supply power to the pump.	• Smooth starting may not be obtained when ambient temperature is 10 ºC or below. In this case, run the pump with no discharge line pressure for a few minutes to warm it up.
4	Adjust air flow.	• Provide a running-in period before full scale operation. • Always adjust an air flow by a suction valve.
5	Check the operation.	• After starting, check a pressure gauge to see if suction and discharge line pressure are correct and an air flow meter to see if the specified air flow is obtained. • Keep a suction line pressure at or below atmospheric pressure. • In case electric power has failed while the pump is running, switch off main power. Otherwise, the motor may not restart or may burn out depending on a line pressure at the time of power recovery.

■ Stop and Storage

● Before a long period of stoppage (1 week or more):
- Release pressure from the pump/tubing and turn off the main power.
- Keep the inside of the pump head free from residual gas.

● Before resuming operation:
- Operation may occasionally be upset in the beginning. In this case, warm up the pump with no load operation.
- Follow the operation table to resume operation.

1. Troubleshooting

If you notice any abnormal or dangerous conditions, suspend operation immediately and inspect/solve problems. Contact us or your nearest distributor as necessary.

Phenomenon / Causes	Pump does not run.	Pump stops running.	Poor air flow or discharge pressure	Pump makes noise.	Measures
No power distribution	○				Check wiring.
Motor trouble (disconnection or capacitor failure)	○	○			Replace the motor.*
Wrong tubing or poor connection	○		○		Check and fix tubing.
Pump head mounting screws are loose.			○	○	Tighten the screws.
Diaphragm insertion is loose.	○		○	○	Tighten diaphragm.
Diaphragm is damaged.			○	○	Replace diaphragm.
Filter is clogged.			○		Remove foreign matters.
Valve is worn.			○		Replace the valve.
Motor-Bracket fixing screws are loose.			○	○	Secure them.
Eccentric shaft has worn.	○			○	Replace the connecting rod unit.*
Connecting rod bearing has worn.	○	○		○	Replace the connecting rod unit.*
Motor bearing has worn.	○	○		○	Replace the motor.*
Voltage reduction	○	○			Increase voltage to the rated level.
Higher suction pressure than atmospheric	○	○			Reduce suction pressure.
Condensation in the pump head.	○				Dry up the pump.

Contact us for the measures marked with *.

2. Maintenance & Inspection

Handling of the pump, maintenance and inspection should be carried out within the descriptions of this instruction manual.

It is not the manufacturer's responsibility for personal injury or property damage resulting from unauthorized service. Contact us or your nearest distributor as necessary.

■ Daily inspection

Check the following points every day. If you notice any abnormal or dangerous conditions, suspend operation immediately and remove problems according to the troubleshooting section. When wear parts come to the life limit, replace them by new ones. Contact your distributor for detail.

No.	Check that:	Measure
1	pump operation is normal.	• Apply correct voltage and amperage. • Adjust discharge/suction pressure.
2	there is no noise or vibration problem.	• Unusual noise/vibration may occur when pump operation is not normal.
3	there is no air leak or air ingress from pump parts and tubing connections.	• Retighten connections.

■ Wear parts

If pump performance has remarkably reduced, replace diaphragms and valves with new ones. Wear part duration varies with the pressure, temperature and characteristics of gas. Values in the table below are collected in continuous operation at the rated voltage and 20 ºC ambient temperature with 20 ºC gas.

Application	Life span	
	Valve	Diaphragm
APN-085	8000 hr	8000 hr
APN-P085		
APN-S085		

*The above lives are reference values and not warranted.

3. Wear part replacement

For a long period of operation wear parts need to be replaced periodically.

⚠ CAUTION

- **Turn off power before service**
  Risk of electrical shock. Be sure to turn off power to stop the pump and related devices before service is performed.
- **Do not touch the pump or pipe with bare hands**
  Risk of burning. The surface temperature of the pump or pipe gets high in or right after operation.
- **Wear protective clothing**
  Always wear protective clothing such as an eye protection, chemical resistant gloves, a mask and a face shield during disassembly, assembly or maintenance work.

See page 14 the "***8. Part names & Structure"*** section as necessary.

■ Diaphragm replacement

<APN-085>

1. Unscrew all the pump head fixing screws and take out the pump head, valve and valve seat.
2. Catch the diaphragm stem with a special spanner and turn the diaphragm anti-clockwise so as to detach it from the con rod.
3. Mount a new diaphragm into the rod and fasten as far as it will rotate with the spanner.
4. Push down the diaphragm until it bottoms out, and then mount and secure the valve seat, valve and pump head onto the bracket with the screws by 1.37 N•m.

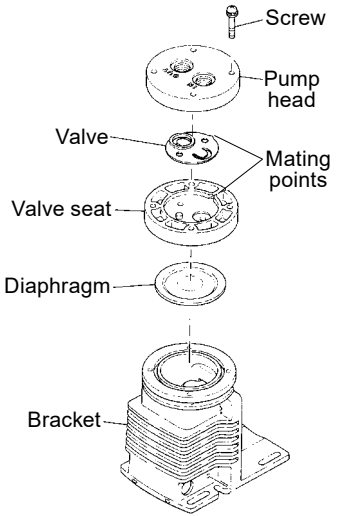

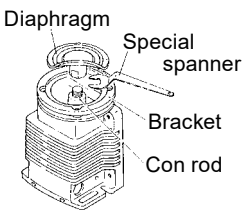

Fig.1

■ Valve replacement

<APN-085>

1. Unscrew all the pump head fixing screws and take out the pump head, valve and valve seat.
2. Replace the old valve with new one. Always check the mating points and fit the valve and the pump head in place.
3. Supply air into the pump head unit through the inlet and check the air is discharged through the outlet.
4. Push down the diaphragm until it bottoms out, and then secure the pump head onto the bracket with the screws by 1.37 N•m.

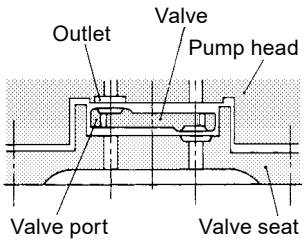

NOTE1. For the pumps with two pump heads, build up each pump head separately.

NOTE2. Do not loosen the motor-bracket fixing screws during maintenance work.

NOTE3. Contact your nearest distributor for the replacement of the connecting rod and the motor.

■ Diaphragm replacement

<APN-085L/H>

1. Unscrew all the pump head fixing screws and take out the pump head, valve and valve seat.
2. Remove the diaphragm fixing screw and detach the retainer plate and diaphragm.
3. Place a new diaphragm onto the under retainer plate.
4. Place the retainer plate onto the diaphragm. Apply the LOCTITE® 222 to the diaphragm fixing screw and tighten it by 1.96 N•m so as to secure the retainer plate.
5. Push down the diaphragm until it bottoms out and then mount and secure the valve seat, valve and pump head onto the bracket with the screws by 1.37 N•m.

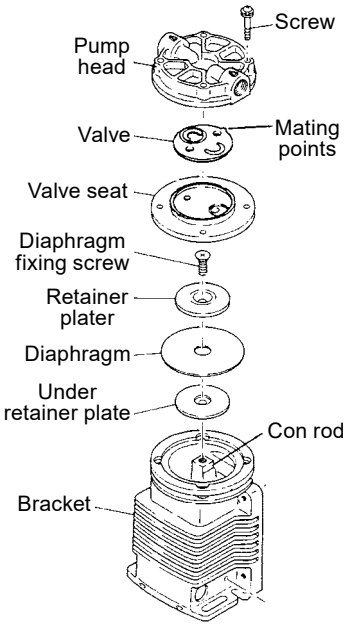

■ Valve replacement

<APN-085L/H>

1. Unscrew the pump head fixing screws and take out the pump head and valve.
2. Replace the old valve with new one. Always check the mating points and fit the valve and the pump head in place.
3. Supply air into the pump head unit through the inlet and check the air is discharged through the outlet.
4. Push down the diaphragm until it bottoms out and then secure the pump head unit onto the bracket with the screws by 1.37 N•m.

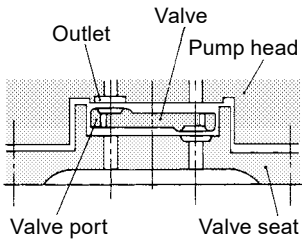

EC DECLARATION OF CONFORMITY

A copy of the original Declaration of Conformity

(SUPPLIER'S NAME)
WE
IWAKI CO.,LTD.

(ADDRESS)
6-6 2-CHOME KANDA-SUDACHO CHIYODA-KU TOKYO JAPAN

(PRODUCT)
DECLARE UNDER OUR SOLE RESPONSIBILITY THAT THE PRODUCTS
AIR PUMP

(MODEL NAME)
APN SERIES AC TYPE

TO WHICH THIS DECLARATION RELATES ARE IN CONFORMITY
WITH THE FOLLOWING STANDARDS OR DIRECTIVES AS FAR AS APPLICABLE

(DIRECTIVES)
MACHINERY DIRECTIVE 2006/42/EC (ANNEX IIA)
RoHS DIRECTIVE 2011/65/EU

(STANDARDS)
EN ISO12100: 2010 EN1012-1: 2010
EN IEC63000: 2018 EN1012-2: 1996 + A1: 2009

(A PERSON WHO IS AUTHORISED TO COMPILE THE TECHNICAL FILE
IN THE COMMUNITY)
IWAKI EUROPE GMBH
SIEMENSRING 115 D-47877 WILLICH GERMANY

NOTE: THIS DECLARATION BECOMES INVALID IF TECHNICAL OR OPERATIONAL MODIFICATIONS ARE INTRODUCED WITHOUT THE MANUFACTURER'S CONSENT.

T. Sawada.

TSUTOMU SAWADA
DEPUTY SENIOR GENERAL MANAGER,
QUALITY ASSURANCE HEAD OFFICE

Tokyo, Sep. 13, 2021

(PLACE AND DATE OF ISSUE) **(NAME AND SIGNATURE OR EQUIVALENT MARKING OF AUTHORIZED PERSON)**

DOCUMENT NO. IS-51K-541-3

Waste Electrical and Electronic Equipment (WEEE)



In accordance with the European Directive 2012/19/EU on waste electrical and electronic equipment, this product features the crossed-out wheelie bin symbol. When this product is disposed of in household wastes, toxic components included in it can cause major environmental and human health problems. Use appropriate waste collection systems for recovery and recycling. Contact your local distributor or nearest Iwaki company for the detailed collection systems.

https://www.iwakipumps.jp

IWAKI CO.,LTD. 6-6 Kanda-Sudacho 2-chome Chiyoda-ku Tokyo 101-8558 Japan
TEL: +81 3 3254 2935 FAX: +81 3 3252 8892

European Headquarter / IWAKI Europe GmbH
TEL: +49 2154 9254 0 FAX: +49 2154 9254 48
Germany / IWAKI Europe GmbH
TEL: +49 2154 9254 50 FAX: +49 2154 9254 55
The Netherlands / IWAKI Europe GmbH (Netherlands Branch)
TEL: +31 74 2420011 FAX: +49 2154 9254 48
Italy / IWAKI Europe GmbH (Italy Branch)
TEL: +39 0445 561219 FAX: +39 0445 569088
Spain / IWAKI Europe GmbH (Spain Branch)
TEL/FAX: +34 934 741 638
Poland / IWAKI Europe GmbH (East Europe Branch)
TEL: +48 12 347 0755 FAX: +48 12 347 0900
Denmark / IWAKI Nordic A/S
TEL: +45 48 242345
Finland / IWAKI Suomi Oy
TEL: +358 10 201 0490
Norway / IWAKI Norge AS
TEL: +47 23 38 49 00
Sweden / IWAKI Sverige AB
TEL: +46 8 511 72900
Belgium / IWAKI Belgium N.V.
TEL: +32 13 670200 FAX: +32 13 672030
France / IWAKI France S.A.
TEL: +33 1 69 63 33 70 FAX: +33 1 64 49 92 73
U.S.A. / IWAKI America Inc.
TEL: +1 508 429 1440 FAX: +1 508 429 1386
Brazil / IWAKI Do Brasil Comercio De Bombas Hidraulicas LTDA.
TEL/FAX: +55 19 3244 5900
China (Shanghai) / IWAKI Pumps (Shanghai) Co., Ltd.
TEL: +86 21 6272 7502 FAX: +86 21 6272 6929
China (Hong Kong) / IWAKI Pumps Co., Ltd.
TEL: +852 2607 1168 FAX: +852 2607 1000
China (Guangzhou) / GFTZ IWAKI Engineering & Trading Co., Ltd.
TEL: +86 20 84350603 FAX: +86 20 84359181
China (Shenzhen) / IWAKI Pumps (Shenzhen) Co., Ltd.
TEL: +86 0755 8656 3696
Singapore / IWAKI Singapore Pte Ltd.
TEL: +65 6316 2028 FAX: +65 6316 3221
Indonesia / IWAKI Singapore Pte Ltd. (Indonesia Office)
TEL: +62 21 6906606 FAX: +62 21 6906612
Malaysia / IWAKIm SDN. BHD.
TEL: +60 3 7803 8807 FAX: +60 3 7803 4800
Korea / IWAKI Korea Co., Ltd.
TEL: +82 2 6238 4800 FAX: +82 2 6238 4801
Taiwan / IWAKI Pumps Taiwan Co., Ltd.
TEL: +886 2 8227 6900 FAX: +886 2 8227 6818
Thailand / IWAKI (Thailand) Co., Ltd.
TEL: +66 2 322 2471 FAX: +66 2 322 2477
Australia / IWAKI Pumps Australia Pty Ltd.
TEL: +61 2 9899 2411 FAX: +61 2 9899 2421

T896-6 '26/09