Iwaki Air Pump

APN-110-D4 (built-in type)

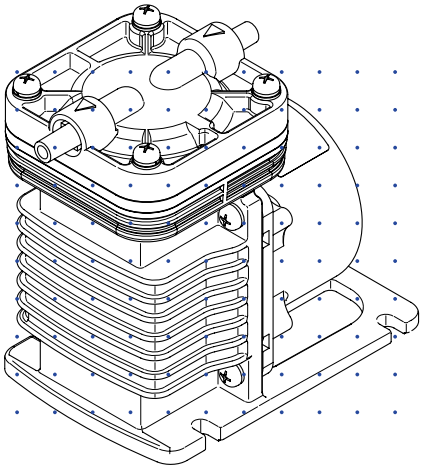

Instruction manual

Thank you for choosing our product.

Please read through this instruction manual before use.

This instruction manual describes important precautions and instructions for the product. Always keep it on hand for quick reference.

© 2022 IWAKI CO.,LTD.

Order confirmation

Open the package and check that the product conforms to your order. If any problem or inconsistency is found, immediately contact your distributor.

a. Check if the delivery is correct.

Check the nameplate to see if the information such as model codes, discharge capacity and discharge pressure are as ordered.

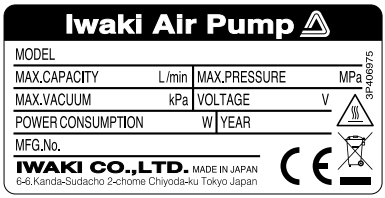

*The CE marking on our product(s) is for us to market the product(s) into the European market, however, the CE marking does not ensure any safety or conformity of the product(s) outside the European market.
When the pump is incorporated into the equipment marketed in the European market, such equipment must meet all the requirements of applicable directives. In such a case, any person who places the equipment on the market must carry a CE mark on the equipment as a manufacturer.

b. Check if the delivery is damaged or deformed.

Check for transit damage and loose bolts.

Contents

Order confirmation **2**

Safety instructions ***5***

WARNING **6**

CAUTION **7**

Precautions for use **9**

Overview ***11***

Introduction **11**

Pump structure & Operating principle 11

Part names **12**

Identification codes **13**

Installation ***14***

Pump mounting **14**

Pipework **15**

Tube connection 15

Wiring **16**

Power & External signal cables 16

Before work 16

Operation ***18***

Pump operation **18**

Before a long period of stoppage (1 week or more) 19

Maintenance ***20***

Troubleshooting **20**

Inspection **22**

Daily inspection 22

Wear part replacement **23**

Wear part list 23

Before service 23

Diaphragm replacement 24

Valve replacement 25

Specification/Outer dimension **26**

Specification 26

Gas contact materials 26

Outer dimension 27

Pumps with parallel female thread connection 27

Pumps with parallel tubing connection 27

Pumps with In-Line female thread connection 28

Pumps with In-Line tubing connection 28

Performance curves 29

Part names & Structure 30

EC DECLARATION OF CONFORMITY 31

Safety instructions

Read through this section before use. This section describes important information for you to prevent personal injury or property damage.

■ Symbols

In this instruction manual, the degree of risk caused by incorrect use is noted with the following symbols. Please pay attention to the information associated with the symbols.

⚠ **WARNING**	Indicates mishandling could lead to a fatal or serious accident.
⚠ **CAUTION**	Indicates mishandling could lead to personal injury or property damage.

A symbol accompanies each precaution, suggesting the use of "Caution", "Prohibited actions" or specific "Requirements".

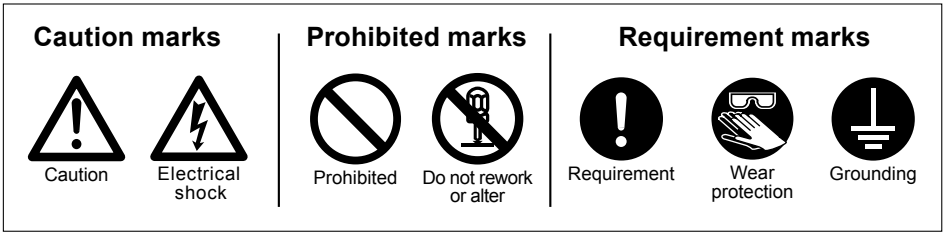

⚠ Export Restrictions

Technical information contained in this instruction manual might be treated as controlled technology in your countries, due to agreements in international regime for export control.

Please be reminded that export license/permission could be required when this manual is provided, due to export control regulations of your country.

⚠ WARNING

Turn off power before service

Risk of electrical shock. Be sure to turn off power to stop the pump and related devices before service is performed.



Stop operation

If you notice any abnormal or dangerous conditions, suspend operation immediately and inspect/solve problems.



Do not use the pump in any condition other than its intended purpose

The use of the pump in any conditions other than those clearly specified may result in failure or injury. Use this product in a specified conditions only.



Do not modify the pump

Alterations to the pump carry a high degree of risk. It is not the manufacturer's responsibility for any failure or injury resulting from alternations to the pump.



Use specified power only

Do not apply power other than that specified on the nameplate. Otherwise, failure or fire may result. Ensure the pump is properly grounded.



Wear protective clothing

Always wear protective clothing such as an eye protection, chemical resistant gloves, a mask and a face shield during disassembly, assembly or maintenance work.



Do not damage a power cable

Do not pull, knot or crush the power cable. Damage to the power cable could lead to a fire or electrical shock if cut or broken.



⚠CAUTION

Qualified personnel only

The pump should be handled or operated by qualified personnel with a full understanding of the pump. Any person not familiar with the product should not take part in the operation or maintenance of the pump.


Requirement

Keep electric parts and wiring dry

Risk of fire or electric shock. Install the pump where it can be kept dry.


Prohibited

Ventilation

Fumes or vapours can be hazardous. Ensure proper ventilation at the operation site.


Caution

Do not install/store the pump:

- In a flammable atmosphere.
- In a dusty/humid environment.
- Where operating (or storage) temperature can fall below 5ºC (or 0ºC) or exceed 40ºC.


Prohibited

Gas leak precautions

Ensure containment of gas in the event of plumbing or pump damage (secondary containment).


Requirement

Do not use the pump in a wet location

The pump is not waterproof. Use of the pump in wet or extremely humid locations could lead to electric shock or short circuit.


Prohibited

The power cable is not replaceable

Do not use a damaged power cable, as it may result in fire or electric shock. If the cable is damaged, the entire pump unit must be replaced.


Electrical shock

Preventative maintenance

Follow instructions in this manual for replacement of wear parts. Do not disassemble the pump beyond the extent of the instructions.


Requirement

Do not use a damaged pump

Use of a damaged pump could lead to an electric shock or death.


Prohibited

Disposal of a used pump

Dispose of any used or damaged pump in accordance with local rules and regulations. If necessary, consult a licensed industrial waste disposal company.


Requirement

Do not touch the pump or pipe with bare hands

Risk of burns. The surface temperature of the pump or piping becomes very high during and immediately after operation, depending on the gas temperature.


Caution

Electromagnetic precautions

This product is not protected against an electromagnetic field. Take appropriate measures as necessary.


Requirement

Do not operate the pump in a flammable atmosphere

Do not place explosive or flammable material near the pump.


Prohibited

Release the pressure from the discharge line

Solution in the discharge line may be under pressure. Release the pressure from the discharge line before disconnecting plumbing or disassembly of the pump to avoid gas leakage.


Requirement

Potentially-flammable/-explosive gas

When using this pump for handling a potentially-flammable or potentially-explosive gas, users must take all necessary measures with their equipment so such a gas is handled safely.


Requirement

Precautions for use

- Electrical work should be performed by a qualified electrician. Otherwise, personal injury or property damage may result.


Caution

- Do not install the pump in a place where the pump can get wet. Avoid using wet gas, or internal condensation will build up and consequently result in the short lives of the valve and diaphragm.


Caution

- Do not use the pump in a dusty place. Be sure to provide the inlet with a filter to prevent foreign matters from getting into the pump. Otherwise, the pump performance may reduce or the lives of the valve and diaphragm remarkably shorten.


Caution

- Do not install the pump in a corrosive or flammable gas atmosphere. Keep good ventilation in a working area. Ambient temperature should not fall below 5°C (41°F) or exceed 40°C (104°F). Observe the allowable gas temperature range of 0 (32°F) and 40°C (104°F).


Caution

- If the compressed air (higher pressure than atmospheric pressure) is transferred to the pump, sharp deterioration to the lives of the valve, diaphragm and bearing may result. Always keep atmospheric or lower pressure in the suction line.


Caution

- Provide a safety system such as an emergency stop in your equipment so you can cope with an unexpected abnormal condition properly.


Requirement

- Do not tube two or more pumps in series. It may prevent the motor from starting, causing burning out or may damage the diaphragm or piping.


Prohibited

• If the injection point, an air bubble stone for example, is immersed in a fish tank or so, locate the pump above the water level.


Prohibited

• Use care handling the pump. Do not drop. An impact may affect pump performance. Do not use a pump that has been damaged to avoid the risk of electrical damage or shock.


Prohibited

• Do not apply power other than that specified on the nameplate. Otherwise, failure or fire may result.


Requirement

• The pump can not start with full discharge/suction pressure. Remove pressure before operation. After a long period of stoppage, pump performance at the beginning of operation becomes occasionally unstable. In this case, warm the pump up for 10 minutes with no discharge line pressure.


Caution

• Always use a suction valve to adjust an air flow.


Caution

• Do not clean the pump or nameplate with a solvent such as benzine, thinner or kerosene. This may discolour the pump or erase printing. Use a dry or damp cloth or a neutral detergent.


Caution

• In accordance with the European Directive 2012/19/EU on waste electrical and electronic equipment (WEEE), this product features the crossed-out wheelie bin symbol. When this product is disposed of in household wastes, toxic components included in it can cause major environmental and human health problems. Use appropriate waste collection systems for recovery and recycling. Contact your local distributor or nearest Iwaki company for the detailed collection systems.

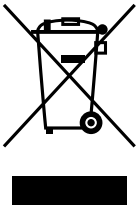

Overview

Pump characteristics, features and part names are described in this section.

Introduction

Pump structure & Operating principle

The APN-110-D4 is a diaphragm type air pump with a brushless DC motor. The rotary motion of the motor is converted through a connecting rod to the reciprocation of the diaphragm in the pump chamber, where gas is transferred from the inlet to outlet.

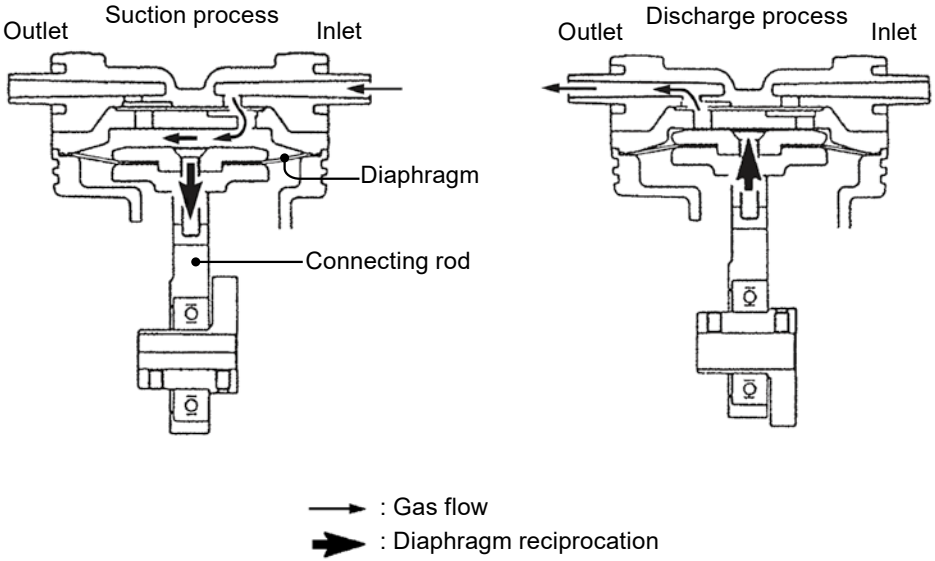

Part names

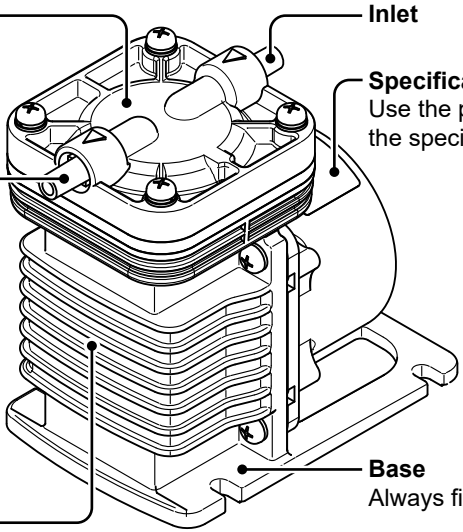

Pump head
Not capable of liquid transfer. Air transfer purpose only.

Outlet

Pump body (with a built-in drive unit)

Inlet

Specification label
Use the pump according to the specifications on the label.

Base
Always fix with screws.

Identification codes

The model code represents the following information.

APN - 110 L V X - D4 - 02
a b c d e f

a. Pump size

b. Tubing direction

K : Parallel type

L : In-line type

c. Diaphragm/Valve materials

E : EPDM

V : FKM

d. Pump connection

No code : ø8 tube connection

X : Rc¼ female thread connection (JIS taper pipe thread)

X1 : G¼ female thread connection (JIS parallel pipe thread)

e. Power voltage

D4 : 24V BLDC motor (with variable speed control)

f. Special specification

Installation

This section describes the installation of the pump, tubing and wiring. Read through this section before work.

Observe the following points

- Risk of electrical shock. Be sure to turn off power to stop the pump and related devices before service is performed.
- If you notice any abnormal or dangerous conditions, suspend operation immediately and inspect/solve problems.
- Do not operate the pump in a flammable atmosphere.

Pump mounting

1 **Select a suitable place.**

See the Precautions for use section before installation.

2 **Anchor the pump.**

Use suitable bolts or screws.

NOTE

Do not install the pump on an unstable place.

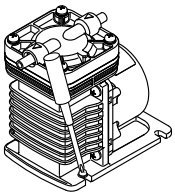

Pipework

Connect tubes to the pump.

Before operation

• Cut the tube ends flat.

Tube end (Side view)

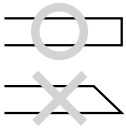

Tube connection

a. The short tubing with the minimum bends is optimal to reduce resistance.

b. Use vinyl tubes resistant to the pumping pressure. Tube I.D. should be equal to the O.D. of the pump inlet/outlet for the prevention of gas ingress/leak or other failure.

*Do not have tubing bent or pressed. Otherwise, the tube end may break.

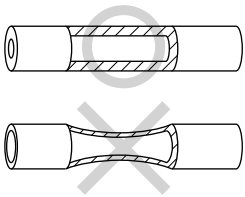

1 **Connect tubes into the inlet and outlet.**

Push the tubes into the inlet and outlet as far as they will go.

*If suction line connection is imperfect, the pump sucks air and it prevents the pump from bringing out full performance.

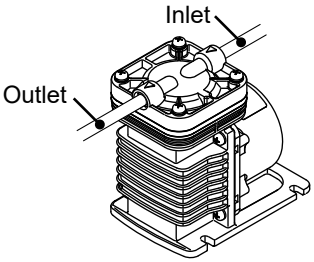

2 **Valve mounting**

Install a valve in the suction line for adjusting an air flow.

Wiring

Wiring for power source, earthing and external signal.

Observe the following points

- Electrical work should be performed by a qualified electrician. Conform to local electric codes.
- Do not perform wiring work while power is on. Otherwise, an electrical shock or short circuit may result, and consequently the pump may fail. Be sure to turn off power before service is performed.

Power & External signal cables

■ Before work

- Check that the main power is turned off.
- Apply the specified power voltage. See the spec label.
- When an external fuse is used and it has blown, always solve the root cause of blowout. Be sure to unplug the power cable before investigation. If the fuse blows frequently, the starting current may be a root cause.
- Red(+) and black(-) leads are for power voltage. Yellow(+) and black(-) leads are for 1-5VDC external variable signal. The black(-) lead is common for both the power and the signal.
- The EMC of this product is maintained by a wind (two turns) of the 24VDC line (red), GND line (black) and control voltage line (yellow) on a TKK NFT-8 ferrite core. Always use this product in this state when it is built in your device. If further measures against EMI is needed, they should be taken to your device.

NOTE

- Observe polarity, otherwise failure or malfunction may result. Note that rotational direction of the motor does not change by reversing polarity.
  Red: 24VDC (+)
  Black: GND (-)
  Yellow: 1-5VDC external variable signal(+)
  Orange: Encoder output (Max output current: 3mA)

- In order to make the ON-OFF operation, install the switch between the DC power supply and the pump. Installing it between the DC power supply and the AC power supply, the pump may not run.



Wiring example

- After wiring work, check that the system is free from the inductive noise at start-up.
- Noise accompanies the high-speed switching of the drive circuit. Check it does not affect peripheral devices.
- If a power source is shared with the inductive load such as solenoid and relay, take protective measures against surge.

Operation

The pump becomes ready after tubing and wiring is completed.

Before operation

a. Check that the pump is firmly fixed on a mounting position.

b. Check that a suction tube is connected to the inlet and a discharge tube is connected to the outlet.

*If a suction line and a discharge line are connected the other way around, pumping process is inverted.

c. Check that every tube connection is secured.

d. Check that electrical wiring is properly done without the possibility of short-circuit and protected by an fuse.

e. Check that power voltage that is specified on the nameplate is applied to the pump.

Pump operation

1 **Open the suction and discharge lines.**

2 **Turn on power.**

Operation may occasionally be upset when starting temperature is low. Warm up the pump under no load operation (a few minutes).

3 **After the pump has reached a specified stroke rate, initiate full scale operation.**

- Always adjust an air flow with a suction valve.
- In case electric power has failed while the pump is running, switch off main power. Otherwise, the motor may not restart or may burn out depending on a line pressure at the time of power recovery.

4 **Check a pressure gauge to see if suction and discharge line pressure are correct and an air flow meter to see if the specified air flow is obtained.**

Before a long period of stoppage (1 week or more)

Depressurize the system and stop air/gas supply. Do not install/store the pump:

- In a flammable/corrosive atmosphere.
- In a dusty/humid environment.
- In direct sunlight or wind & rain.
- Under vibration.
- Where ambient temperature can exceed 0-40°C (32-104°F).

Maintenance

This section describes troubleshooting, inspection, wear part replacement, exploded views and specifications.

Observe the following points

- Follow instructions in this manual for replacement of wear parts. Do not disassemble the pump beyond the extent of the instructions.
- Always wear protective clothing such as an eye protection, chemical resistant gloves, a mask and a face shield during disassembly, assembly or maintenance work.
- Risk of electrical shock. Be sure to turn off power to stop the pump and related devices before service is performed.

Troubleshooting

If you notice any abnormal or dangerous conditions, suspend operation immediately and check the following points. If the following measures do not help remove problems, contact your nearest distributor.

States	Possible causes	Solutions
The pump does not run.	Power voltage is too low or too high.	• Observe the rated voltage of 24VDC.
	The pump is not powered.	• Check the pump is switched on if any. • Correct wiring. • Replace a breaking wire to new one.
	Wrong tubing or poor connection	• Check and fix tubing.
	Diaphragm fixing screw is loose.	• Tighten the screw.
	An eccentric shaft or a connecting rod bearing has worn.	• Replace the connecting rod unit. Contact us.
	Motor trouble (a breaking wire or bearing damage)	• Replace the motor. Contact us.
	Suction line pressure is compressed and is higher than atmospheric pressure.	• Keep it lower than atmospheric pressure.

Pump operation unintentionally stops.	Power voltage is too low or too high.	• Observe the rated voltage of 24VDC.
	Suction line pressure is higher than atmospheric pressure.	• Keep it lower than atmospheric pressure.
	Discharge line pressure is higher than the maximum.	• Observe the maximum discharge pressure.
	Connecting rod bearing has worn.	• Replace the connecting rod unit. Contact us.
	Motor trouble (a breaking wire or bearing damage)	• Replace the motor. Contact us.
An air flow rate and a discharge/ vacuum pressure are too low.	Wrong tubing or poor connection	• Check and fix tubing.
	Pump head mounting screws are loose.	• Tighten the screws.
	Diaphragm fixing screw is loose.	• Tighten the screw.
	Diaphragm is broken.	• Replace the diaphragm.
	Filter is clogged.	• Clean the filter.
	Valve has worn.	• Replace the valve.
Significant noise	Pump head mounting screws are loose.	• Tighten the screws.
	Diaphragm fixing screw is loose.	• Tighten the screw.
	Diaphragm is broken.	• Replace the diaphragm.
	An eccentric shaft or a connecting rod bearing has worn.	• Replace the connecting rod unit. Contact us.
	Motor trouble (bearing damage)	• Replace the motor. Contact us.

Inspection

Perform daily and periodic inspections to keep pump performance and safety.

Daily inspection

Check the following points every day. If you notice any abnormal or dangerous conditions, suspend operation immediately and remove problems according to the "Troubleshooting" section.
When wear parts come to the life limit, replace them by new ones. Contact your distributor for detail.

No.	States	Points to be checked
1	Pumping	• If the specified power voltage & starting current are observed.
		• If the suction and discharge pressure are normal.
2	Noise and vibration	• If abnormal noise or vibration occurs. They are signs of abnormal operation.
3	Gas ingress/leak from pump head joints and a suction line	• Check lines for a leak and retighten as necessary.

Wear part replacement

To run the pump for a long period, wear parts need to be replaced periodically. It is recommended that the following parts are always stocked for immediate replacement. Contact your nearest distributor for detail.

Wear part list

If pump performance has remarkably reduced, replace diaphragms and valves with new ones.

Application	Estimated life	
	Valve	Diaphragm
All APN-110 models	8000hr	8000hr

*Wear part duration varies with the pressure, temperature and characteristics of gas.
*The estimated life above is calculated based on continuous operation in the allowable room temperature range of 5-40°C (41-104°F).
*The estimated life above is not guaranteed.

Before service

Depressurize the pump system before service.

1 **Turn off power to stop the pump.**

2 **Open both the suction- and discharge-line valves or remove the pump from tubing system.**

Diaphragm replacement

1 **Unscrew all the pump head fixing screws.**

Take out the combination of the pump head, valve and valve seat.

*Do not separate each part.

2 **Remove the diaphragm fixing screw and detach the retainer plate and diaphragm.**

3 **Place a new diaphragm and the retainer plate onto the under retainer plate.**

4 **Secure the retainer plate and diaphragm.**

Apply the LOCTITE® 222 to the diaphragm fixing screw and tighten it by 1.96N•m.

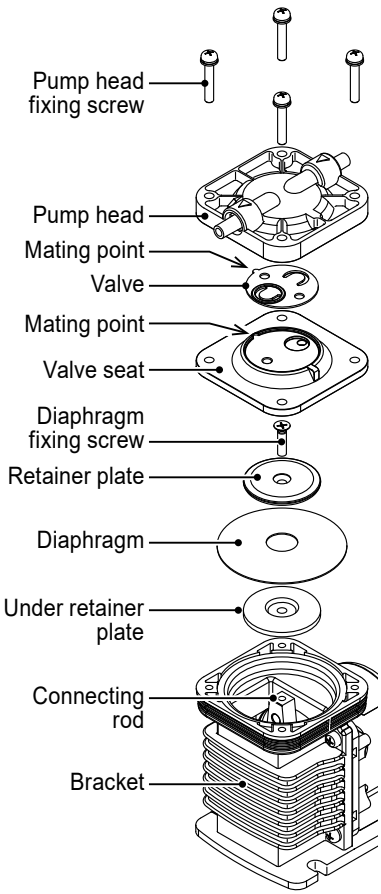

5 **Push down the diaphragm until it bottoms out.**

Mount and secure the combination of the pump head, valve and valve seat onto the bracket with the screws by 1.96N•m.

Valve replacement

1 **Unscrew the pump head fixing screws.**

Take out the pump head and valve from the valve seat.

2 **Replace the old valve with new one.**

Always check the mating point and fit a new valve onto the valve seat.

3 **Mount the pump head.**

Always check the mating point and fit the pump head onto the valve seat.

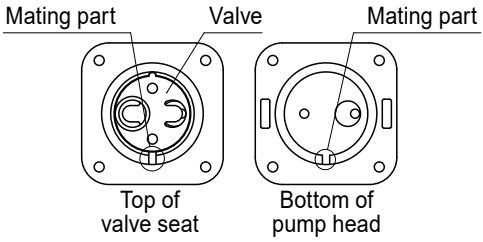

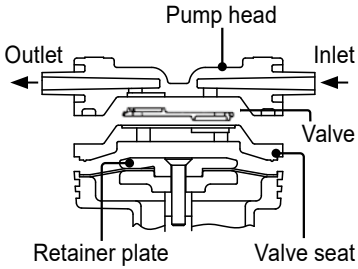

4 **Supply air into the pump head unit.**

Check the air flows from the inlet to the outlet.

5 **Push down the diaphragm until it bottoms out.**

Secure the pump head unit onto the bracket with the fixing screws by 1.96N•m.

NOTE

- Do not loosen the bracket-motor fixing screws during maintenance work.
- Contact your nearest distributor for the replacement of the connecting rod, eccentric shaft and the motor.

Specification

Information in this section is subject to change without notice.

Model code	Max air flow	Max discharge pressure	Max vacuum	Motor		Weight	Lowest starting temp.
				Power con.	Rated current		
APN-110	14L/min	0.1MPa	23.99kPa	33.6W	1.4A	1.4kg	5ºC

*This data is based on operation at 24VDC power voltage and 5VDC control voltage.
*Observe the maximum allowable discharge pressure of 0.1MPa.
*Allowable gas temperature range is 0-40ºC (32-104ºF).
*Allowable ambient temperature range is 5-40ºC (41-104ºF).
*Both the inlet and outlet of the pump are Rc1/4 female thread connections (JIS taper pipe thread).
*Maximum operating noise is 52dB at 1m (A scale).

■ Gas contact materials

Model / Parts	V	E
Pump head	GFRPP	
Diaphragm	FKM	EPDM
Reed valve		
Valve seat	GFRPP	
Retainer plate	GFRPPS	
Screw	SUS304 equivalent	

GFRPP : Glass fiber reinforced polypropylene
FKM : Fluorine-contained rubber
EPDM : Ethylene propylene diene monomer
GFRPPS : Glass fiber reinforced polypropylene sulfide
SUS304 : Austenite stainless steel

Outer dimension

■ Pumps with parallel female thread connection

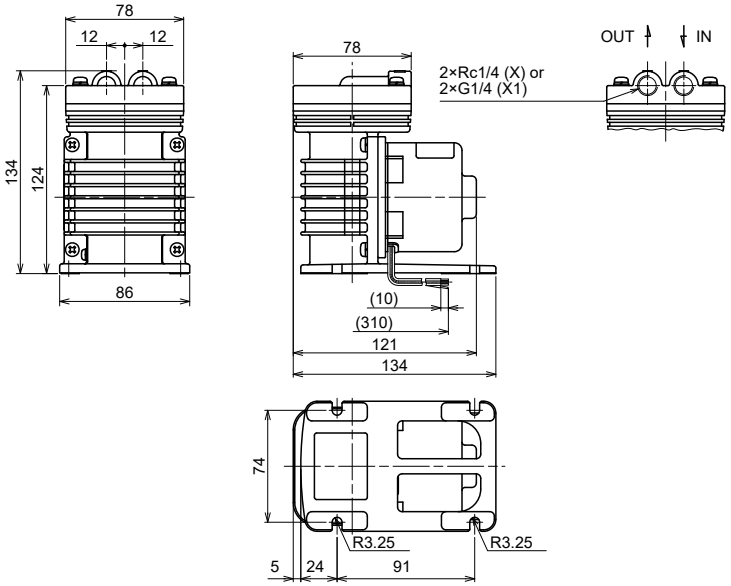

■ Pumps with parallel tubing connection

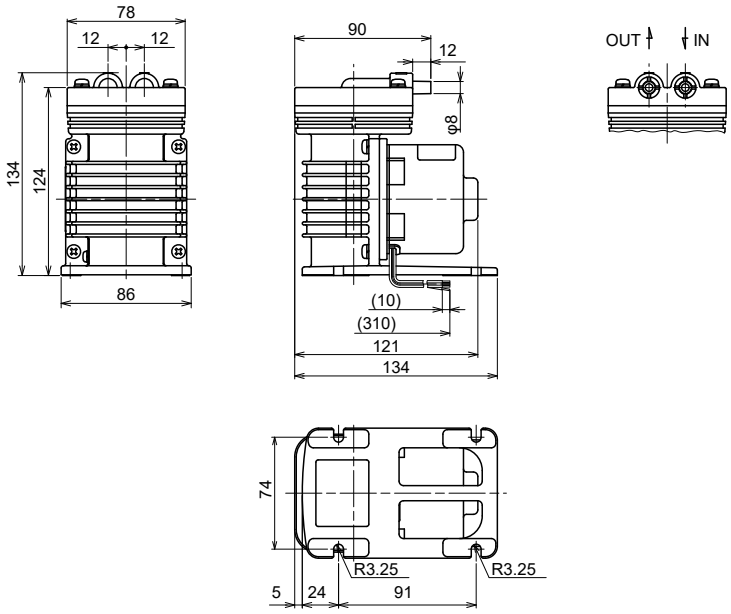

■ Pumps with In-Line female thread connection

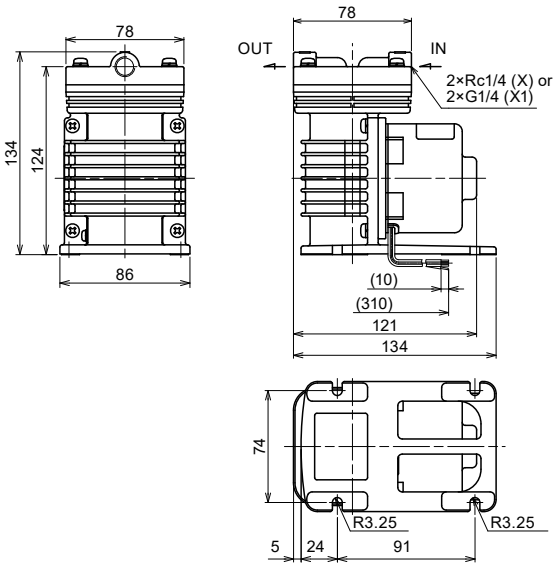

■ Pumps with In-Line tubing connection

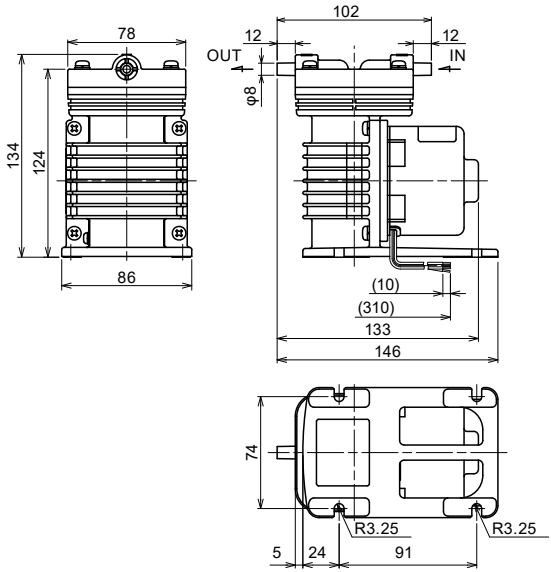

Performance curves

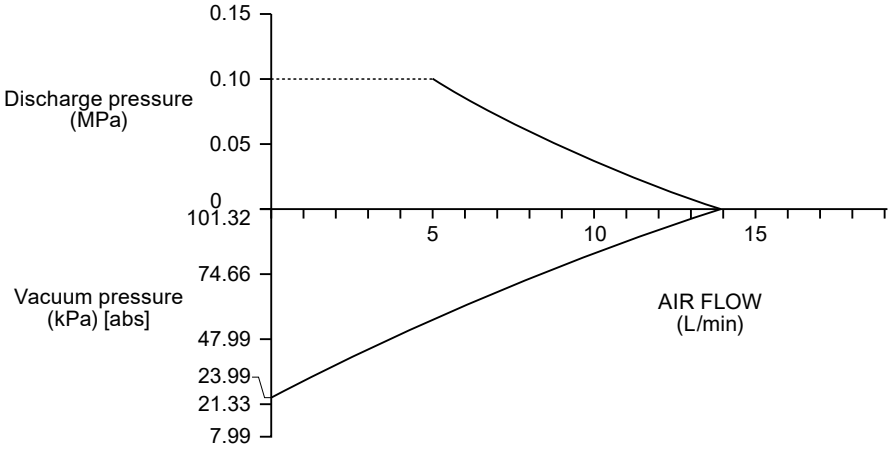

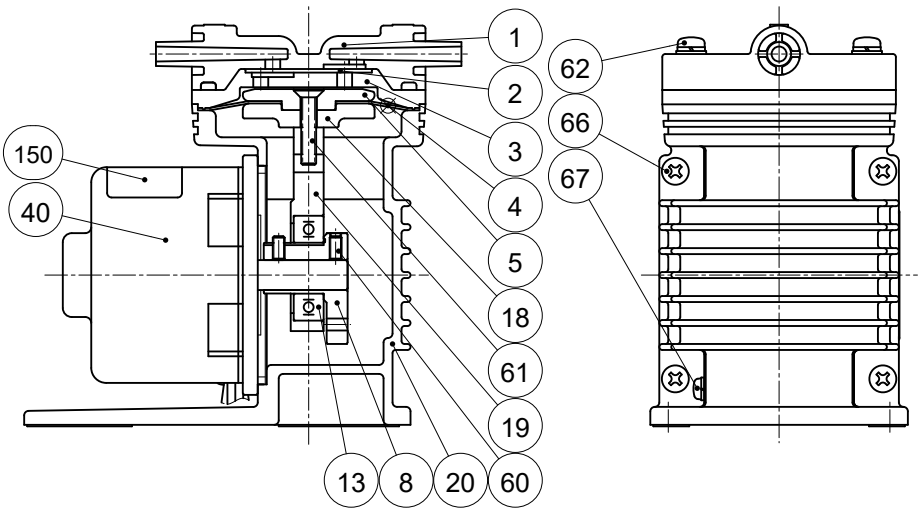

No.	Part names	Q'ty
1	Pump head	1
2	Valve	1
3	Valve seat	1
4	Diaphragm	1
5	Retainer plate	1
8	Eccentric	1
13	Bearing	1
18	Under retainer plate	1
19	Connecting rod	1

No.	Part names	Q'ty
20	Bracket	1
40	Motor	1
60	Set screw	2
61	Screw	1
62	Screw with washer	4
66	Screw with washer	4
67	Screw with washer	1
150	Name plate for pump	1

EC DECLARATION OF CONFORMITY

A copy of the original Declaration of Conformity

(SUPPLIER'S NAME)

WE

IWAKI CO.,LTD.

(ADDRESS)

6-6 2-CHOME KANDA-SUDACHO CHIYODA-KU TOKYO JAPAN

(PRODUCT)

DECLARE UNDER OUR SOLE RESPONSIBILITY THAT THE PRODUCTS

AIR PUMP

(MODEL NAME)

APN SERIES DC TYPE (WITHOUT EMC CONFORMITY)

TO WHICH THIS DECLARATION RELATES ARE IN CONFORMITY
WITH THE FOLLOWING STANDARDS OR DIRECTIVES AS FAR AS APPLICABLE

(DIRECTIVES)

MACHINERY DIRECTIVE 2006/42/EC (ANNEX IIA)
RoHS DIRECTIVE 2011/65/EU

NOTE: THIS PRODUCT IS INTENDED FOR FITTING INTO ANOTHER MACHINE OR INSTALLATION. CONFORMITY WITH THE DIRECTIVE 2014/30/EU SHOULD BE ESTABLISHED BY THE END PRODUCT.

(STANDARDS)

EN ISO12100: 2010
EN 1012-1: 2010
EN 1012-2: 1996 + A1: 2009
EN IEC63000: 2018

(A PERSON WHO IS AUTHORISED TO COMPILE THE TECHNICAL FILE IN THE COMMUNITY)

IWAKI EUROPE GMBH
SIEMENSRING 115 D-47877 WILLICH GERMANY

NOTE: THIS DECLARATION BECOMES INVALID IF TECHNICAL OR OPERATIONAL MODIFICATIONS ARE INTRODUCED WITHOUT THE MANUFACTURER'S CONSENT.

T. Sawada.

TSUTOMU SAWADA
SENIOR GENERAL MANAGER,
QUALITY ASSURANCE HEAD OFFICE

Tokyo, May 26, 2022

(PLACE AND DATE OF ISSUE) **(NAME AND SIGNATURE OR EQUIVALENT MARKING OF AUTHORIZED PERSON)**

DOCUMENT NO. IS-51K-608

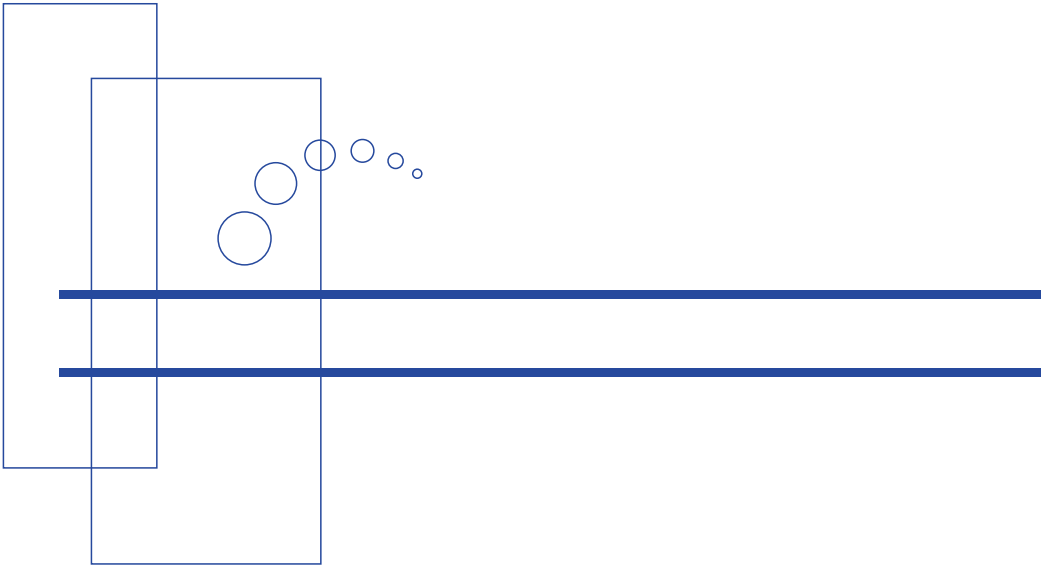

https://www.iwakipumps.jp

IWAKI CO.,LTD. 6-6 Kanda-Sudacho 2-chome Chiyoda-ku Tokyo 101-8558 Japan
TEL: +81 3 3254 2935 FAX: +81 3 3252 8892

European Headquarter / IWAKI Europe GmbH
TEL: +49 2154 9254 0 FAX: +49 2154 9254 48

Germany / IWAKI Europe GmbH
TEL: +49 2154 9254 50 FAX: +49 2154 9254 55

The Netherlands / IWAKI Europe GmbH (Netherlands Branch)
TEL: +31 74 2420011 FAX: +49 2154 9254 48

Italy / IWAKI Europe GmbH (Italy Branch)
TEL: +39 0445 561219 FAX: +39 0445 569088

Spain / IWAKI Europe GmbH (Spain Branch)
TEL/FAX: +34 934 741 638

Poland / IWAKI Europe GmbH (East Europe Branch)
TEL: +48 12 347 0755 FAX: +48 12 347 0900

Denmark / IWAKI Nordic A/S
TEL: +45 48 242345

Finland / IWAKI Suomi Oy
TEL: +358 10 201 0490

Norway / IWAKI Norge AS
TEL: +47 23 38 49 00

Sweden / IWAKI Sverige AB
TEL: +46 8 511 72900

Belgium / IWAKI Belgium N.V.
TEL: +32 13 670200 FAX: +32 13 672030

France / IWAKI France S.A.
TEL: +33 1 69 63 33 70 FAX: +33 1 64 49 92 73

U.S.A. / IWAKI America Inc.
TEL: +1 508 429 1440 FAX: +1 508 429 1386

Brazil / IWAKI Do Brasil Comercio De Bombas Hidraulicas LTDA.
TEL/FAX: +55 19 3244 5900

China (Shanghai) / IWAKI Pumps (Shanghai) Co., Ltd.
TEL: +86 21 6272 7502 FAX: +86 21 6272 6929

China (Hong Kong) / IWAKI Pumps Co., Ltd.
TEL: +852 2607 1168 FAX: +852 2607 1000

China (Guangzhou) / GFTZ IWAKI Engineering & Trading Co., Ltd.
TEL: +86 20 84350603 FAX: +86 20 84359181

China (Shenzhen) / IWAKI Pumps (Shenzhen) Co., Ltd.
TEL: +86 0755 8656 3696

Singapore / IWAKI Singapore Pte Ltd.
TEL: +65 6316 2028 FAX: +65 6316 3221

Indonesia / IWAKI Singapore Pte Ltd. (Indonesia Office)
TEL: +62 21 6906606 FAX: +62 21 6906612

Malaysia / IWAKIm SDN. BHD.
TEL: +60 3 7803 8807 FAX: +60 3 7803 4800

Korea / IWAKI Korea Co., Ltd.
TEL: +82 2 6238 4800 FAX: +82 2 6238 4801

Taiwan / IWAKI Pumps Taiwan Co., Ltd.
TEL: +886 2 8227 6900 FAX: +886 2 8227 6818

Thailand / IWAKI (Thailand) Co., Ltd.
TEL: +66 2 322 2471 FAX: +66 2 322 2477

Australia / IWAKI Pumps Australia Pty Ltd.
TEL: +61 2 9899 2411 FAX: +61 2 9899 2421

T1166-2 '26/09