Iwaki
Pneumatic Drive Bellows Pump

CFD-8T-B

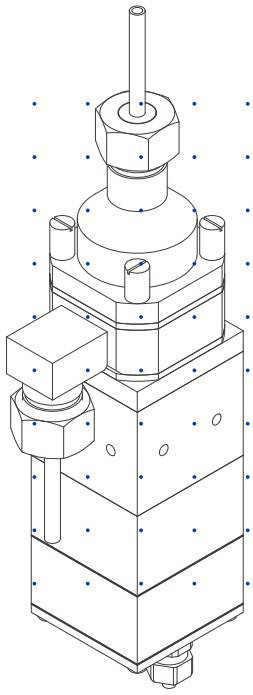

Instruction manual

Thank you for choosing our product.

⚠ Please read through this instruction manual before use.

This instruction manual describes important precautions and instructions for the product. Always keep it on hand for quick reference.

©2020 IWAKI CO., LTD.

Order confirmation

Open the package and check that the product conforms to your order. If any problem or inconsistency is found, immediately contact your distributor.

a. Check if the delivery is correct.

Check the nameplate to see if the information such as model codes are as ordered.

*Electrical wiring changes with the controllers.

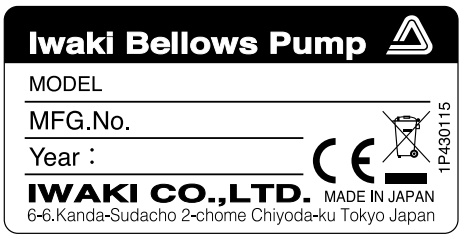

*The CE marking on our product(s) is for us to market the product(s) into the European market, however, the CE marking does not ensure any safety or conformity of the product(s) outside the European market.
When the pump is incorporated into the equipment marketed in the European market, such equipment must meet all the requirements of applicable directives.
In such a case, any person who places the equipment on the market must carry a CE mark on the equipment as a manufacturer.

b. Check if the delivery is damaged or deformed.

Check for transit damage and loose bolts.

Contents

Order confirmation **2**

Safety instructions 5

WARNING **6**

CAUTION **7**

Precautions for use **9**

Overview 10

Introduction **10**

Pump structure & Operating principle 10

Part names **11**

Pump 11

Operating conditions **12**

Pump stroke 12

Supply air pressure range 12

Liquid temperature range 12

Liquid characteristics 12

■ Do not run the pump with the following liquid: 12

■ Use care handling the following liquid: 12

Operation and Stoppage 13

■ During operation 13

■ During stoppage 13

Ambient temperature 13

Pump surface temperature 13

Noise from pump 13

Identification codes **14**

Installation 15

Peripheral devices **15**

Pump mounting **16**

Liquid line **16**

■ Suction lift system 17

■ Flooded suction system 17

Air line **18**

■ Supply air port I.D. 18

■ Supply air consumption 18

Air line piping diagram 19

■ Basic air-line diagram 19

Electric wiring **20**
Photosensor and User's PLC (programmable logic controller) 20
Photosensor mechanism 21
Timing chart 22
■ Ladder diagram program 23
Operation ***24***
Before operation **24**
Pump operation **25**
Starting the pump 25
Volume Per Shot (VPS) adjustment 26
■ Factory default/Adjustable range 26
■ VPS/Stroke Length (SL) 26
■ spm control (speed controller) 26
■ Stroke length adjustment 27
Maintenance ***28***
Troubleshooting **28**
Inspection **30**
Daily inspection 30
Periodic inspection 30
Wear part list 31
Specification/Outer dimension **31**
Specification 31
Outer dimension 32
■ CFD-8T-B 32
Exploded view 33
■ CFD-8T-B 33
EC DECLARATION OF CONFORMITY 34

Safety instructions

Read through this section before use. This section describes important information for you to prevent personal injury or property damage.

■ Symbols

In this instruction manual, the degree of risk caused by incorrect use is noted with the following symbols. Please pay attention to the information associated with the symbols.

⚠ **WARNING**	**Indicates mishandling could lead to a fatal or serious accident.**
⚠ **CAUTION**	**Indicates mishandling could lead to personal injury or property damage.**

A symbol accompanies each precaution, suggesting the use of "Caution", "Prohibited actions" or specific "Requirement".

Caution marks



Prohibited marks



Requirement marks



⚠Export Restrictions

Technical information contained in this instruction manual might be treated as controlled technology in your countries, due to agreements in international regime for export control.
Please be reminded that export license/permission could be required when this manual is provided, due to export control regulations of your country.

⚠WARNING


Requirement

Turn off power before work
Risk of electrical shock. Be sure to turn off power to stop the pump and related devices before service is performed. Let other people know about the situation by displaying a notice such as "POWER OFF (Maintenance)" near the power switch.


Requirement

Confirm safety in your working area
Keep away from the pump when turning on the system power. Ensure that no personnel are in the vicinity of the pump or related equipment before turning on the system (including solenoid valves, PLCs, and other devices). The pump itself does not have an ON/OFF switch and starts operating when power is supplied to the system.


Requirement

Stop operation
If you notice any abnormal or dangerous conditions, suspend operation immediately and inspect/solve problems.


Prohibited

Do not use the pump in any condition other than its intended purpose
The use of the pump in any conditions other than those clearly specified may result in failure or injury. Use this product in specified conditions only.


Do not remodel

Do not modify the pump
Alterations to the pump carry a high degree of risk. It is not the manufacturer's responsibility for any failure or injury resulting from alterations to the pump.


Wear protectors

Wear protective clothing
Always wear protective clothing such as an eye protection, chemical resistant gloves, a mask and a face shield during disassembly, assembly or maintenance work. The specific solution will dictate the degree of protection. Refer to SDS precautions from the solution supplier.


Prohibited

It's not in a flame-proof or an explosion-proof design
Photo sensors can not be used with a flammable/explosive liquid such as solvent.


Requirement

Spill precautions
Ensure protection and containment of solution in the event of plumbing or pump damage (secondary containment). In the event of liquid leakage, dispose of the leaked chemical solution properly in accordance with local rules and regulations.


Requirement

Depressurize piping before disassembly
Release a pressure from both liquid and air lines before dismantling the pump or removing piping.


Caution

This pump has been tested with alcohol
Nitric acid chemically reacts with alcohol to explode. Clean the inside of the pump with pure water when any liquid that includes nitric acid.

⚠CAUTION


Requirement

Qualified personnel only

The pump should be handled or operated by qualified personnel with a full understanding of the pump. Any person not familiar with the product should not take part in the operation or maintenance of the pump.


Prohibited

Use specified power only

Do not use any power other than that specified for the photosensor. Otherwise, failure or fire may result.


Requirement

Ventilation

Fumes or vapours can be hazardous with certain solutions. Ensure proper ventilation at the operation site.


Prohibited

Do not install or store the pump:

- In a flammable/corrosive atmosphere.
- In a dusty/humid environment.


Requirement

Flushing before operation

Flush the inside of the pump and piping with pure water or the liquid to be delivered before the start of operation.


Caution

Do not touch the pump or pipe with bare hands

Risk of burns. The surface temperature of the pump or piping becomes very high during and immediately after operation, depending on the liquid temperature.


Requirement

Do not run the pump with the following liquid:

- Solvent
- Liquid that easily crystallizes
- Slurry
- Low conductivity hydrocarbon liquid


Requirement

Static electricity

When low electric conductivity liquids such as ultra-pure water are handled, the static electricity may be generated in the pump and may cause static discharge. Take countermeasures to remove the static electricity.


Requirement

Before returning product

Be sure to drain chemicals and clean the inside of the pump before return so that a harmful chemical does not spill out in transit.


Requirement

Observe the maximum stroke rate

Operation above 30 spm may reduce the life of bellows. See the "Specification" section on page 31 for detail.


Requirement

Disposal of a used pump

Dispose of any used or damaged pump in accordance with local rules and regulations. If necessary, consult a licensed industrial waste disposal company.

Precautions for use

- During transit:
  –Do not hit/wet the package.
  –Keep the package dry.



- Electrical work should be performed by a qualified electrician. Otherwise, personal injury or property damage could result.



- Allow sufficient space around the pump for easy access and maintenance.



- Use care handling the pump. Do not drop. An impact may affect pump performance. Do not use a pump that has been damaged to avoid the risk of electrical damage or shock.

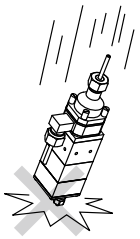

- The pump is not waterproof. Do not operate the pump while wet with solution or water. Failure or injury may result. Immediately dry off the pump if they get wet.



- Do not close discharge line during operation. Solution may leak or piping may break.



- Solution in the discharge line may be under pressure. Release the pressure from the discharge line before disconnecting plumbing or disassembly of the pump to avoid solution spray.



- Wear protective clothing when handling or working with pumps. Consult solution SDS for appropriate precautions. Do not come into contact with residual solution.



- Do not leave the pump with any chemical in the bellows for a long period. Some chemical gas can penetrate the bellows and corrode metal parts. If you want to leave the pump with chemical in it, run the pump for ten minutes every few days and replace gas in the air chamber.



- In accordance with the European Directive 2012/19/EU on waste electrical and electronic equipment (WEEE), this product features the crossed-out wheelie bin symbol. When this product is disposed of in household wastes, toxic components included in it can cause major environmental and human health problems. Use appropriate waste collection systems for recovery and recycling. Contact your local distributor or nearest Iwaki company for the detailed collection systems.

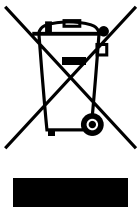

Overview

Pump characteristics, features and part names are described in this section.

Introduction

Pump structure & Operating principle

An Iwaki CFD series pneumatic drive bellows pump has fluoric wet ends and is designed for semiconductor manufacturing processes.

Principle of operation

The pump unit has a bellows in the pump head. The reciprocating motion of the bellows takes in liquid and let it out to the system. The pump with built-in valve balls is capable of sending liquid independently according to this principle.

Suction process

The bellows takes in solution from the inlet as the "Air IN" air pushes down the cylinder and the bellows contracts, with no assistance of air-operated valves.

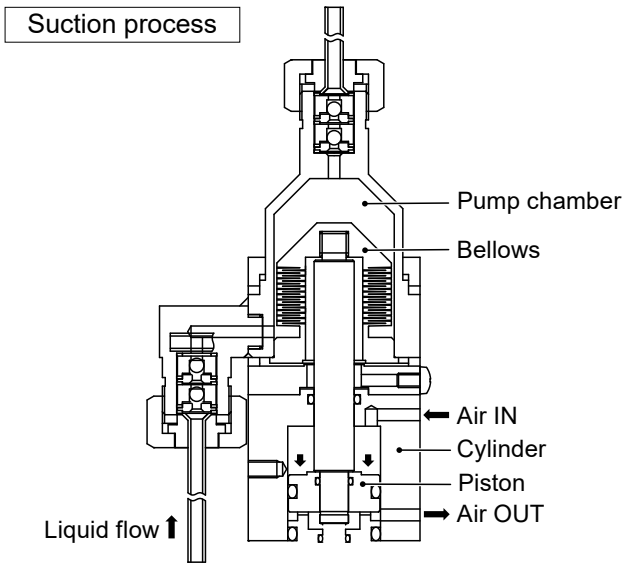

Discharge process

The bellows lets out solution from the outlet as the "Air IN" air pushes up the cylinder and the bellows expands, with no assistance of air-operated valves.

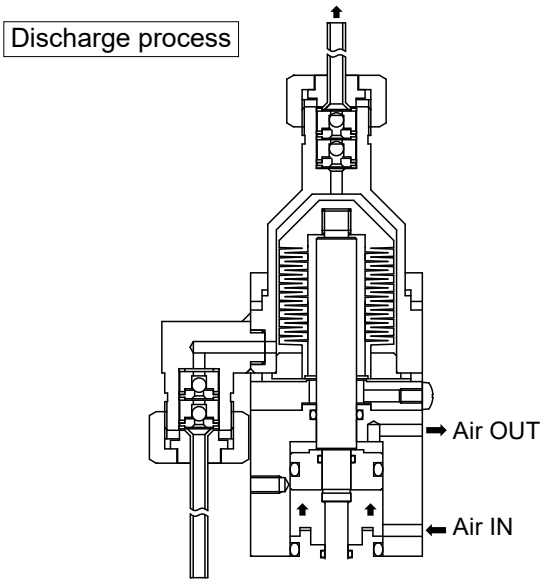

Part names

Pump

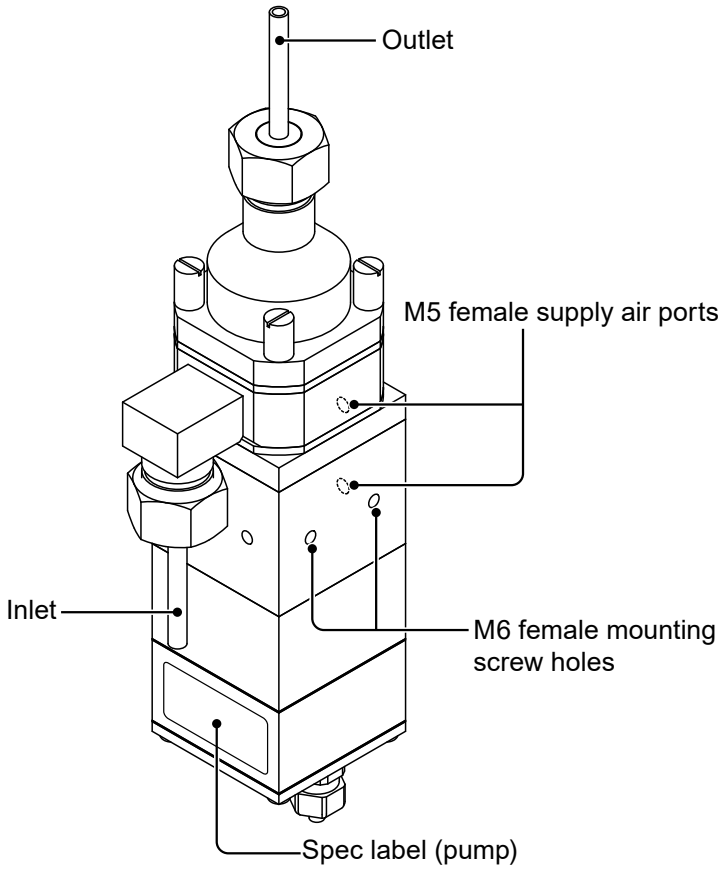

*Do not clean the pump or spec label with a solvent such as benzine or thinner.

Operating conditions

Pump stroke

Observe the maximum stroke rate of 30 spm.

Supply air pressure range

Observe the allowable supply air pressure range of 0.15-0.30 MPa.
*A flow rate changes with supply air pressure. Provide a regulator to keep the pressure constant.

Liquid temperature range

Observe the allowable liquid temperature range of 20-60 ºC (68-140 ºF).
*Depending on liquid properties, vapor-liquid separation could happen over 60 °C (140 °F).

Liquid characteristics

■ Do not run the pump with the following liquid:

- *Liquid that easily crystallizes*
- *Slurry*
- *Low conductivity hydrocarbon liquid*

*Liquid crystallization or the delivery of slurry remarkably shortens the lives of valves and bellows.
*Delivery of low conductivity hydrocarbon liquid can cause ESD damage (electrostatic discharge damage) to fluoroplastic wet ends.

■ Use care handling the following liquid:

- *Stripper*
- *Solvent*
- *Hydrazine*
- *Fuming sulfuric acid*

*Some strippers could crack the PFA bellows and piping quickly, and therefore a warranty period is shortened. Contact us for detail.
*An explosion-proof construction is required for the delivery of solvents. Contact us for detail.

Operation and Stoppage

■ During operation

Make sure a suction and a discharge line are fully opened.

■ During stoppage

Do not leave the pump with any chemical in the bellows for a long period. Some chemical gas can penetrate the bellows and corrode metal parts.

Ambient temperature

Observe the allowable operating ambient temperature range of 0-40 ºC (32-104 ºF).

Pump surface temperature

Risk of burning. The surface temperature of the pump or pipe rises high along with liquid temperature in or right after operation. For example, a cylinder surface temperature rises up to 50 ºC (122 ºF) when liquid temperature is 60 ºC (140 ºF) and ambient temperature is 35 ºC (95 ºF).

Liquid temperature	Cylinder surface temperature	Ambient temperature
60 ºC (140 ºF)	50 ºC (122 ºF)	35 ºC (95 ºF)

Noise from pump

Exhaust noise accompanies pump operation. Provide noise insulation as necessary. For example, a noise level rises up to 60 dB (A) at 30 spm and 0.30 MPa (supply air pressure).

Supply air pressure	Stroke rate	Noise level
0.30 MPa	30 spm	60 dB (A)

*The noise level above includes the operating noise from the pump and the SV.

Identification codes

Each code represents the following information.

CFD - 8 T - B - 01
a b c d e

a. Series name
CFD: Chemical Replenishing Pump

b. Volume per shot
8: 8 mL

c. Wet ends
T: PTFE

d. Valve
B: Built-in valve balls

e. Special specifications
No symbol: Standard
01: Special specifications (01, 02…)

Installation

This section describes the installation of the pump, piping and wiring. Read through this section before work.

Points to be observed

- Be sure to turn off power to stop the pump and related devices before service is performed.
- Be careful for the power not to be turned on during work.
- If you notice any abnormal or dangerous conditions, suspend operation immediately and inspect/solve problems.
- Do not install the pump in a flammable atmosphere.

Peripheral devices

Mount the pump in a flooded suction system or a suction lift system. To operate this pump, not only liquid plumbing, but also air plumbing needs be configured optimally with the air-regulator(s), solenoid valve(s), speed controllers, user's PLC, and if needed, air-operated valve(s). These peripheral devices are not shipped with our pump. Purchase separately.

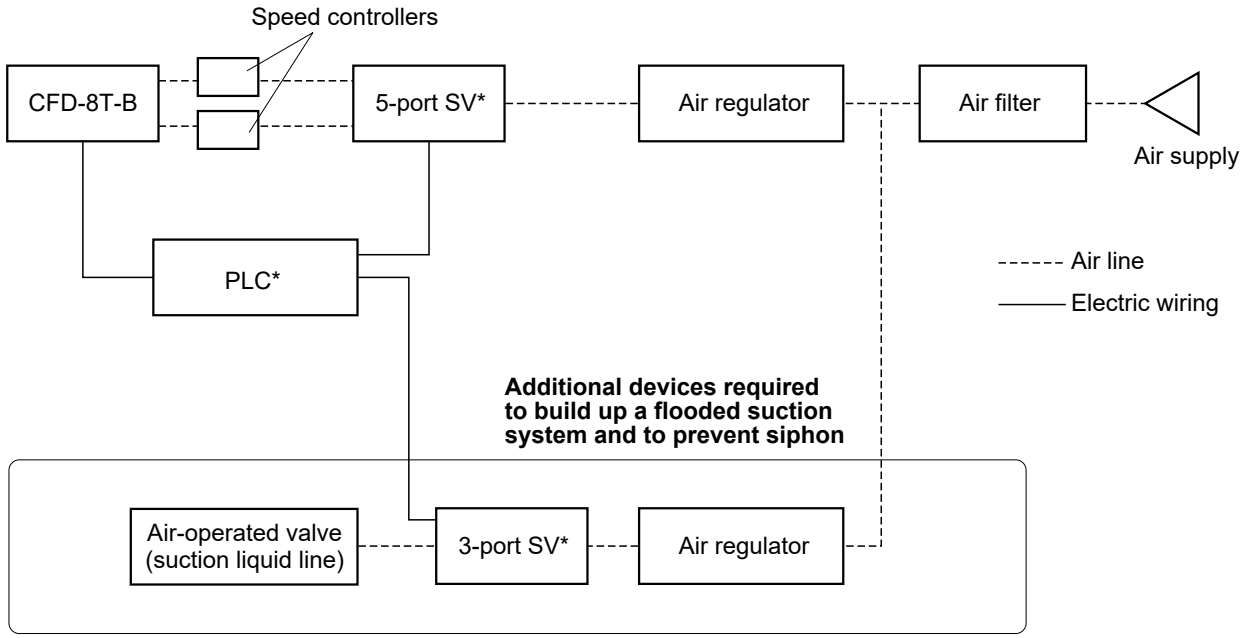

*SV= Solenoid Valve
*PLC= Programmable Logic Controller

Pump mounting

Take the following steps to optimally mount the pump.

1 Select a location

Select a level location, free from vibration, that won't hold liquid. Place the pump as close to the supply tank as possible.

2 Position the pump upright with the outlet upward

The piston must reciprocate vertically, or outputs may be reduced.

3 Anchor the pump so it doesn't vibrate

Use the M6 bolts on the cylinder to catch the pump vertically. Allow sufficient space (at least 15 cm) beneath the pump bottom for the need of stroke length adjustment. See the "Volume Per Shot (VPS) adjustment" section on page 26.

Liquid line

The pump has the 1/4" (O.D.6.35mm×I.D.4.35mm) PFA tube inlet and outlet. Use applicable tube fittings for the connection with your piping system.

*Select an appropriate tube fitting size. Both discharge- and suction-line I.D. should be larger than the pump outlet & inlet O.D.
*General joints can be used, however, no leakage is allowed under hot liquid transfer or heat cycle.
*Use measures to keep the pump connections free from stress.

Points to be observed

Air blow or flush a suction and a discharge tube to get rid of debris prior to connecting with the pump.

1 Connect a suction and a discharge tube to the pump inlet and outlet via the tube fittings

Use measures to keep the pump connections free from stress such as weight and thermal expansion/ contraction.

NOTE

Be sure to secure each connection to prevent leakage and air ingress.

■ Suction lift system

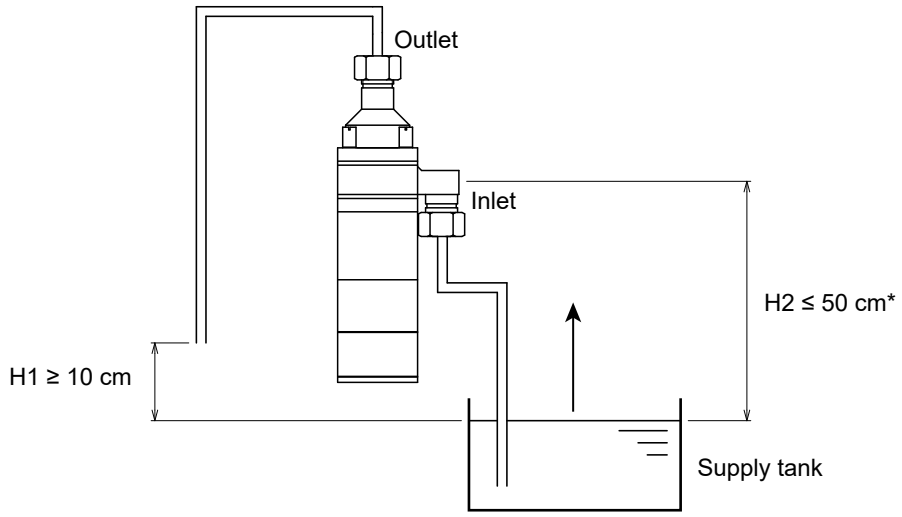

- H1 represents for the height between the injection point and the tank liquid level. Keep it 10 cm or higher.
- H2 represents for the height between the pump inlet and the tank liquid level. Keep it 50 cm or lower.

*The max suction lift of 50 cm is based on clean water at ambient temperature. It will get reduced with liquid characteristics, liquid temperature, and tube length. Especially, with liquids that generate gas bubbles, the max suction lift becomes much shorter.

■ Flooded suction system

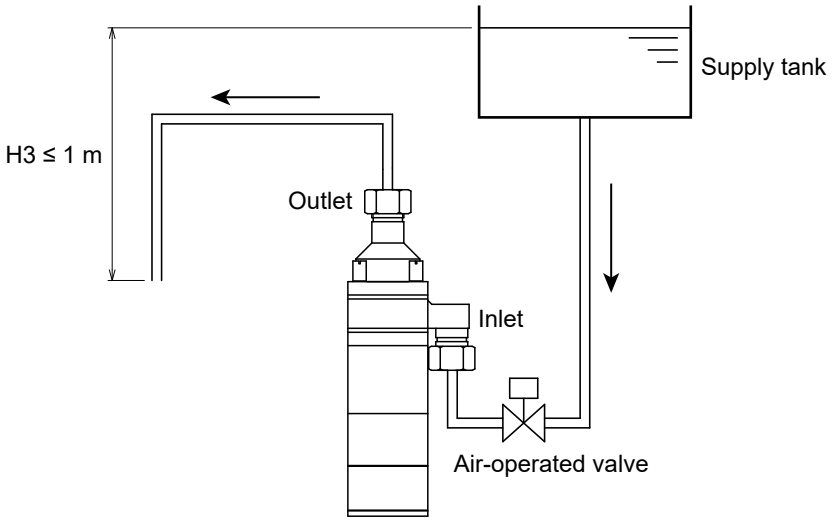

In this configuration that the injection point is located below the liquid level, siphon happens. Take measures against siphon so overflow or an empty tank won't happen.

- Provide an air-operated valve in the suction line, so the liquid won't overflow inadvertently (syphon) during operation or stop.
- Also, push up the cylinder and expand the bellows during stop so there is no room for liquid to flow inadvertently through the pump head.
- H3 represents for the height between the injection point and the liquid level. Keep it 100 cm or shorter.
- Use the normally-closed type air-operated valve. The normally-open type could lead to inadvertent overflow (syphon) through the pump head when air supply is cut off.

Air line

Points to be observed

- Supply air should be free from moisture and dust. If the supply air is contaminated with water, oil or dust, the pump may fail in starting.
- Air blow air tubes, tube couplings, solenoid valves, or any other pneumatic devices to get rid of debris prior to connecting with the pump.

■ Supply air port I.D.

Supply air port I.D. is M5 (5 mm). Connect an applicable tube coupling to the pump. Observe the tightening torque of your tube coupling (purchase separately) and make sure air does not leak from the connection point.

NOTE

- Do not use excessive force or wrench that exceeds 1.6 N·m. Or the M5 female supply air port may crush.
- Secure every connection for the prevention of air leak.

■ Supply air consumption

The pump consumes up to 5.4 NL/min (when it runs at the max 30 spm, 0.30 MPa supply air pressure, and 0.05 MPa liquid discharge pressure). Select optimal regulators, solenoid valves, and speed controllers that ensure the maximum possible rate of the supply air (5.4 NL/min) to the pump.

NOTE

Secure every connection for the prevention of air leak.

Air line piping diagram

■ Basic air-line diagram

The diagram below is a general layout of an air-line plumbing with the solenoid valve closed (not powered).

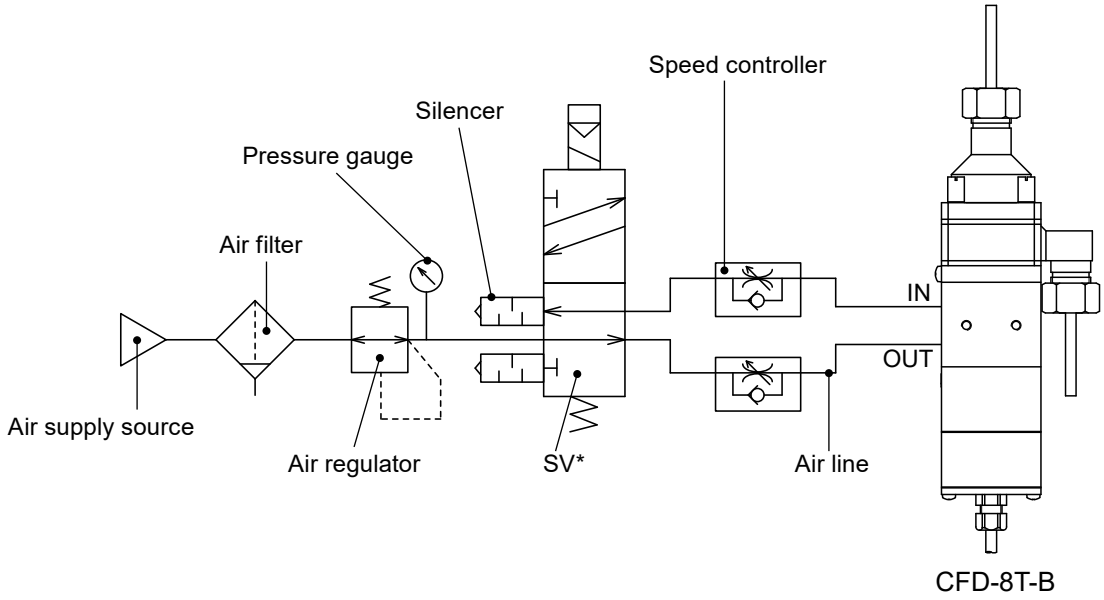

*With this diagram, the solenoid valve (SV) is in a closed position (not powered).

! Precautions for solenoid valves

Use a 5-port 2-position single solenoid valve for pump drive. Always connect the normally-open (N.O.) port to the "OUT" supply air port (the lower port on the cylinder).

- If the N.O. port is connected to the "IN" supply air port (the upper port on the cylinder) inadvertently:
  a. The cylinder won't expand the bellows during stop so there will be a room for syphon to happen (CFD-8T-B in a flooded suction system).
  b. The stroke length adjusting bolt won't rotate. Do no use excessive force or the bolt slot would even be stripped.
- If any solenoid valve other than 5-port 2-position single one is used:
  a. The accuracy of the pump output could be reduced.
  b. If it's double solenoid valve, you couldn't tell which port is normally-open and piping could be too complicated to run the pump properly.

! Precautions for speed controllers

Use meter-out-type speed controllers. If meter-in-type speed controllers are used, cylinder reciprocation will be upset.

Electric wiring

Electric wiring for photosensor signal output.

Points to be observed

- Electrical work should be performed by a qualified electrician. Always observe applicable codes or regulations.
- Do not perform wiring work while the power is on. Otherwise, an electrical shock or short circuit may result. Be sure to turn off power before wiring work.

Photosensor and User's PLC (programmable logic controller)

See below for the wiring between the photosensor and your PLC.

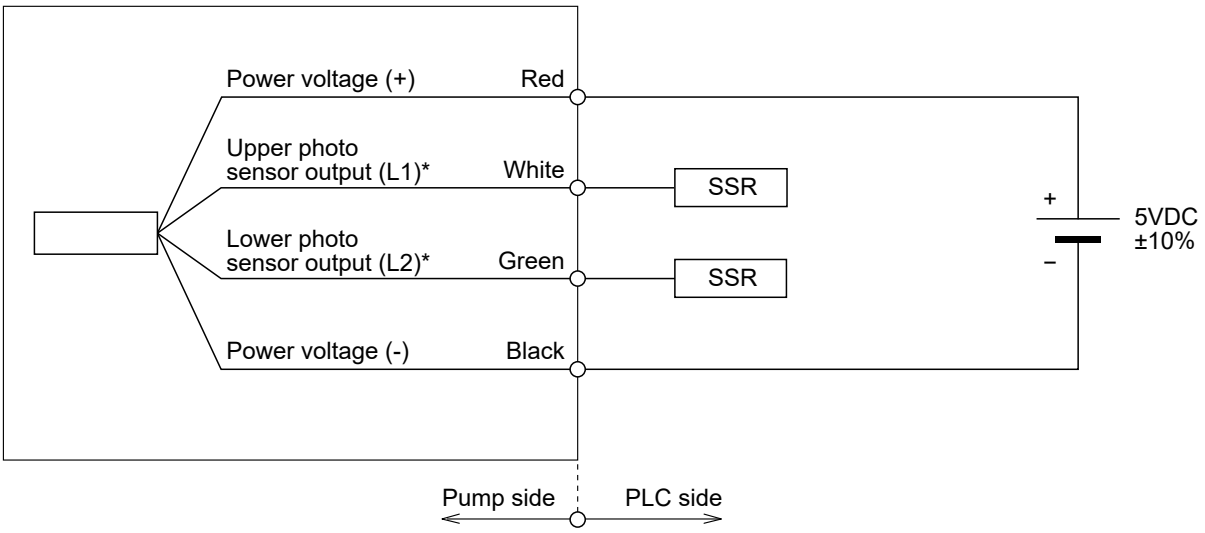

*Use an external SSR (solid state relay) that is capable of handling the maximum applied voltage from the pump L1 and L2 outputs (5 VDC with 50 mA).

Precautions for electrical wiring

- Risk of electric circuit failure. Make sure electric wiring is done correctly. The electric circuit of this product is not protected against reverse power (5 VDC). Also, the L1 and L2 photo sensor outputs are not protected against short circuit. Finally, do not connect inadvertently 5 VDC power voltage to the L1 or L2 photo sensor output.
- Risk of malfunction. Do not lay the L1 and L2 photo sensor output cables along with the power cable of a high power device.
- Do not pull, knot, or crush the L1 and L2 photo sensor output cable. Damage to the sensor output cable could lead to a fire or electrical shock if cut or broken.
- Risk of short circuit. Keep the sensor output cable dry, or aggressive chemical may break cable isolation.
- Take measures to protect the electric circuit from surge voltage from an external device.
- Take account of the transition time of the L1 and L2 photo sensor outputs that is 50 msec after the 5 VDC power voltage is entered to the electric circuit.
- Always check for incorrect wiring before the 5 VDC power voltage is applied to the electric circuit.

Photosensor mechanism

The photo sensor works in coordination with the pump reciprocation in the sequence below.

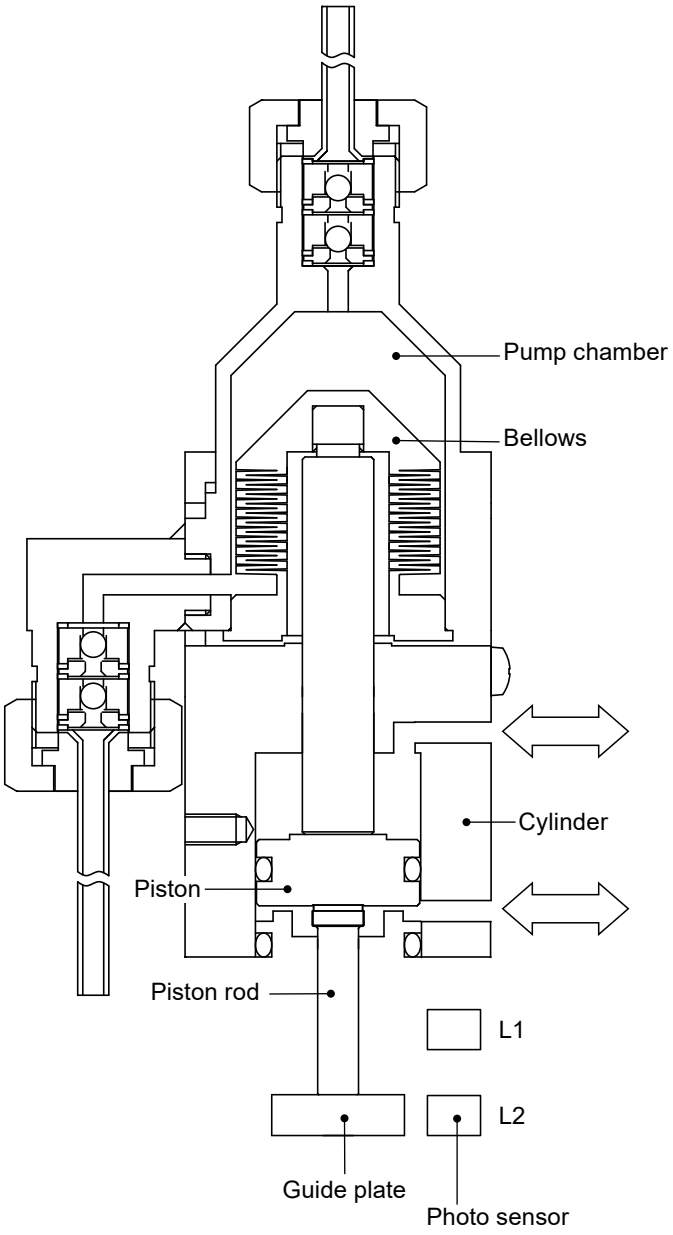

a. Your PLC sends the command to the 5-port 2-position single SV to supply air to the "IN" port (the upper port on the cylinder) and pushes down the piston and bellows. At this time, liquid is taken into the pump chamber.

b. When the piston bottoms out, the L2 photo sensor detects the guide plate that is at the lower end of the piston rod (see the left illust.) and sends the L2 signal out to your PLC.

c. Your PLC sends the command to the 5-port 2-position single SV to supply air to the "OUT" port (the lower port on the cylinder) and pushes up the piston and bellows. At this time, liquid is let out of the pump chamber.

d. When the piston tops out, the L1 photo sensor detects the guide plate and sends the L1 signal out to your PLC. The process returns to the Process "a".

e. While you suspend the pump, keep air supply to the "OUT" port and the bellows at the top position. When you restart the pump, just return to the process "a".

Timing chart

See below for the general PLC sequence for run the pump properly.

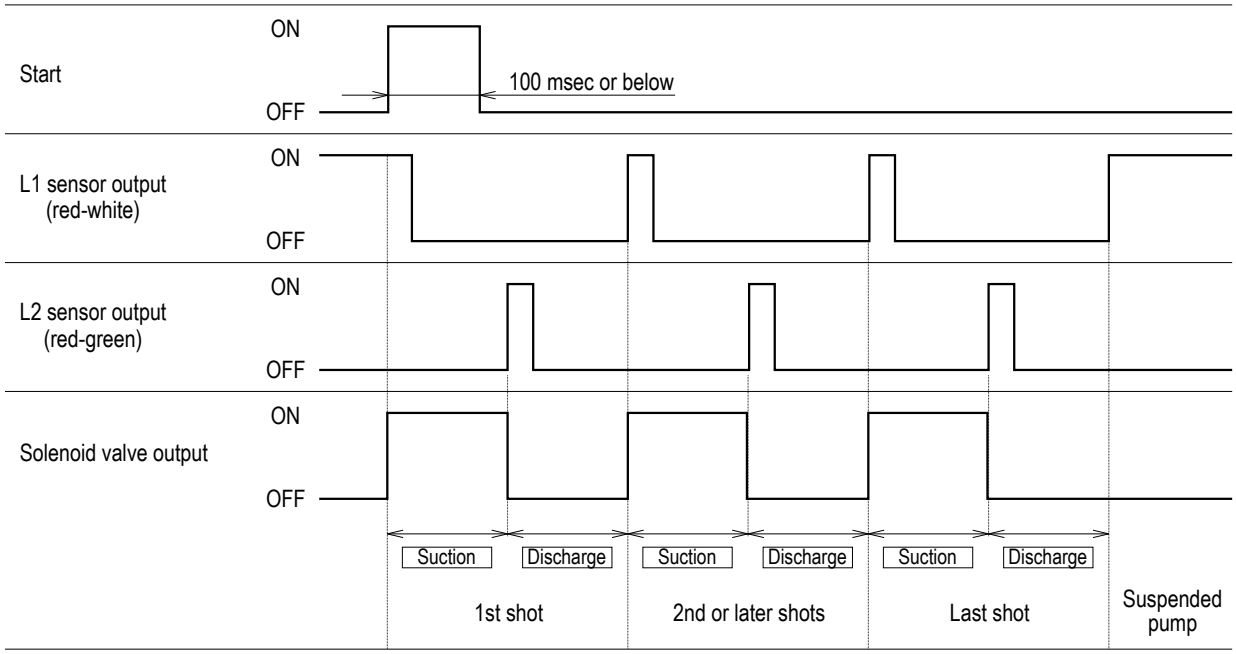

Precautions for sequencing signals

- During the system stop, the L1 sensor output must be kept ON. Check for wrong wiring if not.
- In every suction process, the solenoid valve output must be kept ON until the L2 sensor output is turned ON.
- In every discharge process, the solenoid valve output must be kept OFF until the L1 sensor out is turned ON.
- Once the PLC has completed the set number of shots and the sequence for it, the solenoid valve output must be kept OFF regardless of the ON state of the L1 sensor output.
- When the air-operated valve on the discharge line is used, do not close it as stopping the pump, or an impact pressure may deform the bellows. Provide a 3-second delay time to close the outlet side air-operated valve.

■ Ladder diagram program

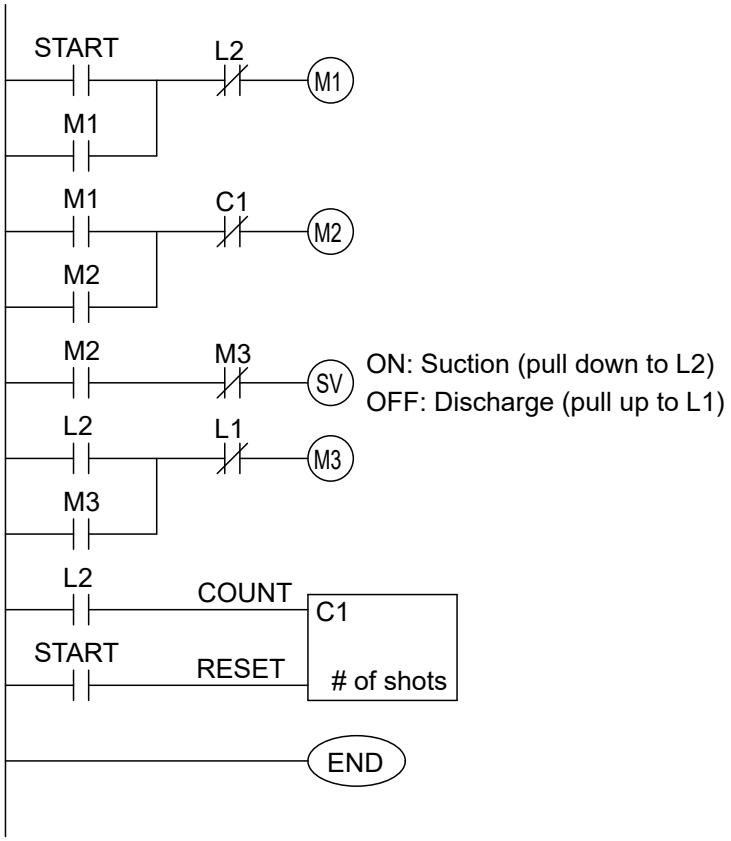

M1: PLC internal relay
M2: PLC internal relay
M3: PLC internal relay
SV: Solenoid valve
L1: Photo sensor (white)
L2: Photo sensor (green)
C1: PLC internal shot counter
START: Start signal from PLC

*See the manufacturer's instruction manual of PLC for more information.
*This is an example of programming. It's not the manufacturer's responsibility for any failure or injury resulting from incorrect programming.
*The START signal must be 100 msec or shorter.

Operation

This section describes pump operation and programming. Run the pump after plumbing and wiring are completed.

Before operation

Always check the following items before the first-time operation or resuming operation after a long period of stoppage.

Points to be observed
This product is not explosion proof design. Do not use with a flammable liquid such as solvent.

1 Check if electric wiring is made correctly

2 Check if air piping is made correctly

3 Check if the pump is anchored securely

4 Check if liquid piping is made correctly

5 Check if a suction and a discharge line is open

6 Check for a liquid level in the supply tank

Pump operation

Points to be observed

Before operation in your system, conduct a trial run with pure water (or chemical liquid) to flush out particles or to measure metal ion level.

Starting the pump

1 Supply air to the pump

Set the regulator to keep the pump's allowable air pressure of 0.15-0.30 MPa.

NOTE

If the air-operated valve is used, it must have its own allowable air pressure range. See manufacturer's manual. If its air pressure range doesn't match that of pump and they can't share the same regulator, use a different regulator for the air-operated valve. If needed, use a different supply air source as well.

2 Open the supply air lines

NOTE

The pump consumes up to 5.4 NL/min when it runs at the max 30 spm, 0.30 MPa supply air pressure, and 0.05 MPa liquid discharge pressure. The pump can exceed the max 30 spm if the liquid discharge pressure is reduced. In this case, reduce the supply air flow to observe the rated max spm.

3 Supply power voltage to the photo sensor

4 Use your PLC to start your programmed sequence and pump & system

5 The pump stops when the programmed number of shots are completed and programmed sequence are finished

NOTE

- When you suspend the pump, keep air supply to the "OUT" port and the bellows at the top position.

Volume Per Shot (VPS) adjustment

The flow rate of the pump is determined by the volume per shot and the pump spm (speed controller).

■ Factory default/Adjustable range

Factory default (VPS)	8 mL/shot at 30 spm
Adjustable range (VPS)	7-10 mL/shot
Stroke rate	10-30 spm

■ VPS/Stroke Length (SL)

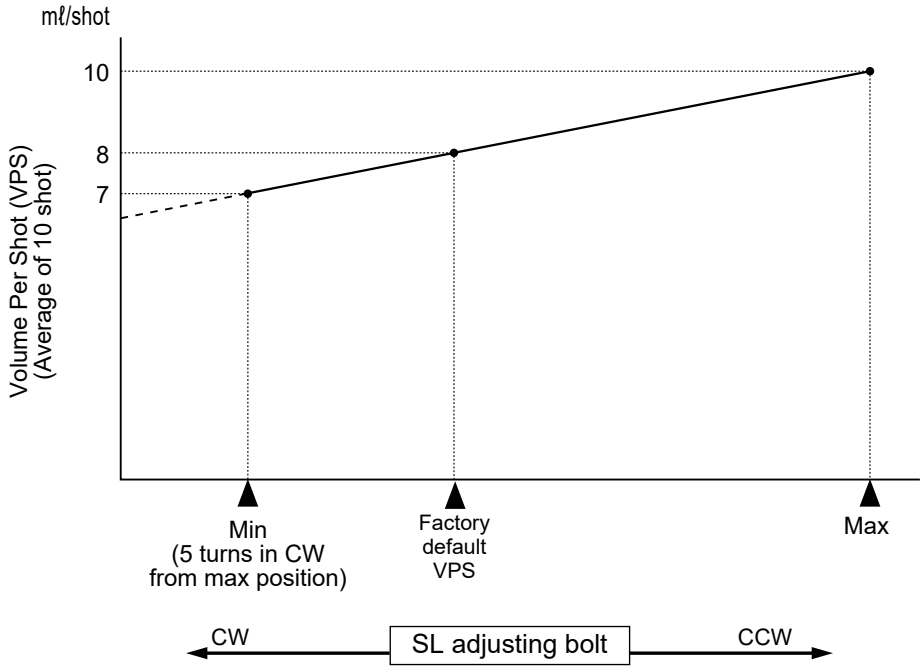

*The factory default VPS of 8 mL/shot is obtained at the maximum pump speed of 30 spm. The VPS reduces if spm gets lower even when the stroke length is the same (or not changed).

■ spm control (speed controller)

The pump spm can be adjusted in between 10-30 spm. Open or close the needle valve of the speed controller to increase or decrease spm. Note both the inlet and outlet speed controllers are opened the same extent so the cylinder up and down at the same rate.

■ Stroke length adjustment

1 When you suspend the pump, supply air to the "OUT" port so the bellows will stay at the top position

2 Remove the cover and the Packing A

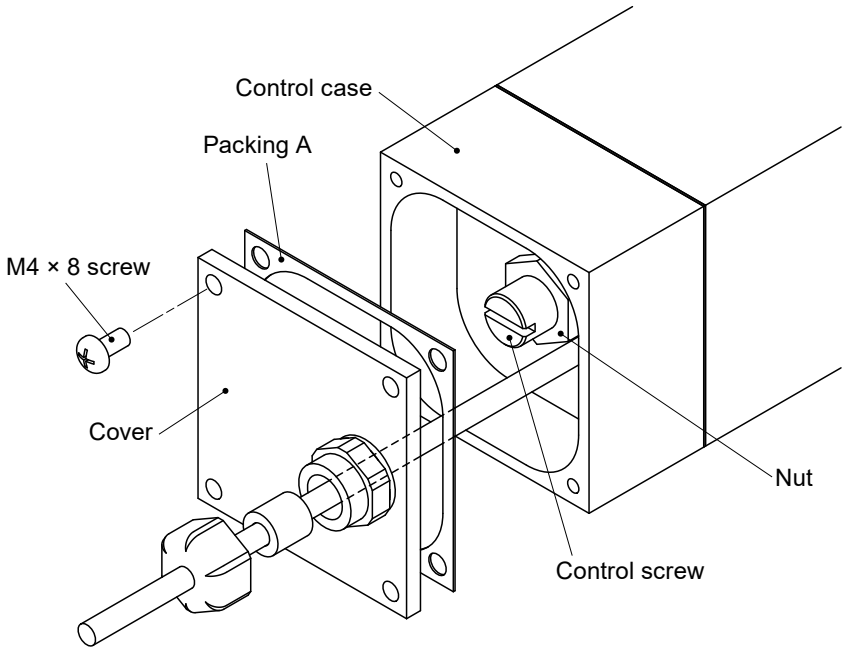

3 Loosen the nut while holding the control screw with the flathead screw driver

4 Adjust the control screw and stroke length

To increase the stroke length and the VPS, turn the control screw counterclockwise. The screw won't turn exceeding the max SL position.

To decrease the stroke length and the VPS, turn the control screw clockwise.

NOTE

- Do not turn the control screw clockwise for more than five (5) rotations. Or the stroke length decreases too much to run properly.
- Measure the actual VPS if accuracy is pursued.

5 Tighten the nut while holding the control screw with the flathead screw driver

6 Replace the cover and the Packing A

NOTE

Watch the Packing A so it won't come out of place or be twisted.

Maintenance

This section describes troubleshooting, inspection, specification and dimensions.

Points to be observed

- Observe instructions in this manual for maintenance, inspection, disassembly and assembly. Do not disassemble the pump beyond the extent of the instructions.
- Always wear protective clothing such as an eye protection, chemical resistant gloves, a mask and a face shield during disassembly, assembly or maintenance work. The specific solution will dictate the degree of protection. Refer to SDS precautions from the solution supplier.
- Solution in the discharge line may be under pressure. Release the pressure from the discharge line before disconnecting plumbing or disassembly of the pump to avoid solution spray.
- Risk of electrical shock. Be sure to turn off power to stop the pump and related devices before service is performed.
- Before stopping the pump, release the pressure from the discharge line. Otherwise, the bellows may deform.
- Do not close a discharge valve as stopping the pump. An impact pressure may deform the bellows.

Troubleshooting

First check the following points. If the following measures do not help remove problems, contact us or your distributor for repair or replacement.

States	Possible causes	Points to be checked	Solutions
The pump does not run.	Bellows rupture (leak alarm output)	-	● Replace the pump.
	Photosensor doesn't work properly.	○ Photosensor failure	● Replace photosensor.
		○ No power voltage	● Supply power.
	Supply air pressure/air flow is too low.	○ Air compressor failure	● Repair compressor.
		○ PRV* is set too low.	● Correct set pressure.
		○ Clogged air filter	● Clean or replace filter.
		○ Air leak from connections	● Tighten connections.
		○ Speed controller set pressure is too low.	● Correct set pressure.
	Solenoid valve doesn't switch over correctly.	-	● Repair or replace SV.
	Broken wiring	-	● Repair or replace wiring.
	Wrong wiring	-	● Correct wiring.
	Wrong air piping	-	● Correct air piping.
	Wrong PLC sequence	-	● Correct sequence.

PRV: Pressure Reducing Valve

*Contact us for replacement or repair.

States	Possible causes	Points to be checked	Solutions
Liquid can not be pumped up.	Bellows rupture	-	● Replace the pump.
	Entrained air from the suction line.	-	● Optimise your system configuration (tank, liquid piping, couplings, etc.)
	Inlet/outlet valve balls do not work properly.	○ Debris in valve balls	● Repair or replace.
		○ Incorrect pump mounting direction	● Mount the pump in the vertical position.
Flow rate is reduced.	Supply air pressure/air flow is too low.	○ Air compressor failure	● Repair compressor.
		○ PRV* is set too low.	● Correct set pressure.
		○ Clogged air filter	● Clean or replace filter.
		○ Air leak from connections	● Tighten connections.
		○ Speed controller set pressure is too low.	● Correct set pressure.
	Inlet/outlet valve balls do not work properly.	○ Debris in valve balls	● Repair or replace.
		○ Incorrect pump mounting direction	● Mount the pump in the vertical position.
	Discharge pressure increment	-	● Check the discharge line for clogging or a crushed pipe.
	Broken air-tightness (O ring in the drive unit)	-	● Replace O ring.
	Supply air volume has changed.	-	● Inspect and correct the supply air source.

PRV: Pressure Reducing Valve

*Contact us for replacement or repair.

Inspection

Perform daily and periodic inspection to keep pump performance and safety.

Daily inspection

Check for a leak or any other abnormality during operation. If you notice any abnormal conditions, stop operation immediately and remove problems according to the "Troubleshooting" section.

No.	Points to be checked	Remarks
1	Stroke rate of the pump	Observe the rated spm range of 10-30 spm.
2	Regulator set pressure	Observe the supply air pressure range of 0.15-0.30 MPa
3	Supply air rate	-
4	A leak from the air/liquid lines	
5	Supply air cleanness	

Periodic inspection

Check the following items every month.

1. Air leak

Check if air is exhausted from the 5-port solenoid valve that is on the main air supply line to the pump. If it is, it's a sign of worn O rings in the drive unit. Replace as necessary. Also, see the next page for the wear limit of each O ring.

2. Entrained air in the liquid line

Check if air is entrained in the liquid line. If it is, it's a sign of an empty tank or loose coupling. Remove problems as necessary.

3. Bellows/valves

The bellows and inlet/outlet valve balls are wear parts. They need to be replaced at regular intervals. See the next page for the expected life of each part/device.

*The expected life can change with liquid properties or operating conditions.
*Contact us for replacement of the bellows and the inlet/outlet valve balls.

4. Pump operation after a long period of suspension

Supply the air (approx. 0.2 MPa) and run the pump for ensuring air tightness (air line and liquid line).

Wear part list

To run the pump for a long period, wear parts need to be replaced periodically or when pump performance has reduced. Contact your distributor with the following information for wear part replacement.

1. Part names and part number (See the "Exploded view" section on page 33 or later.)
2. Pump model identification code and manufacturing number (See pump nameplate.)
3. Drawing number if you have our approval drawing

Parts number	Part names	Q'ty	Estimated life
1/2	Pump head unit	1	1 year
19	O ring (P-8)	1	
20	O ring (P-10)	1	
21	O ring (P-14)	1	
22	O ring (P-26)	2	
52	Valve gasket	10	
53	Valve guide	4	
54	Valve	4	
55	Valve seat	4	

*The estimated life span varies with operating conditions and is not warranted.
*Q'ty shows the number of parts.

Specification/Outer dimension

Specification

Information in this section is subject to change without notice.

	Items	Spec
Pump	Volume Per Shot (VPS)*1	8 mL
	Max discharge pressure	0.05 MPa
	Allowable liquid temperature	20-60 ºC
	Max stroke rate	30 spm
	Allowable supply air pressure	0.15-0.30 MPa
	Max air consumption*2	5.4 NL/min
	Suction lift*3	50 cm
	Wet end materials	PTFE/PFA/PCTFE
	Pump inlet/outlet size	1/4" PFA TUBE (O.D. 6.35 mm × I.D. 4.35 mm)
	Supply air line connection I.D.	M5
	Weight	1.5 kg
Photosen-sor	Type	Transmissive micro photo sensor
	Power voltage	5 VDC ± 10 %
	Output type	Voltage output
	Output current	50 mA or below
	Lead wire length	5 m (O.D. 6.5 mm 4-core PVC cable with 0.5-4 round terminal)

*1 The maximum flow rate is based on pumping clean water at ambient temperature and 30 spm.
*2 The pump consumes the max 5.4 NL/min (when it runs at the max 30 spm, 0.30 MPa supply air pressure, and 0.05 MPa liquid discharge pressure).
*3 The suction lift is based on pumping clean water at an ambient temperature and the maximum spm.

Outer dimension

■ CFD-8T-B

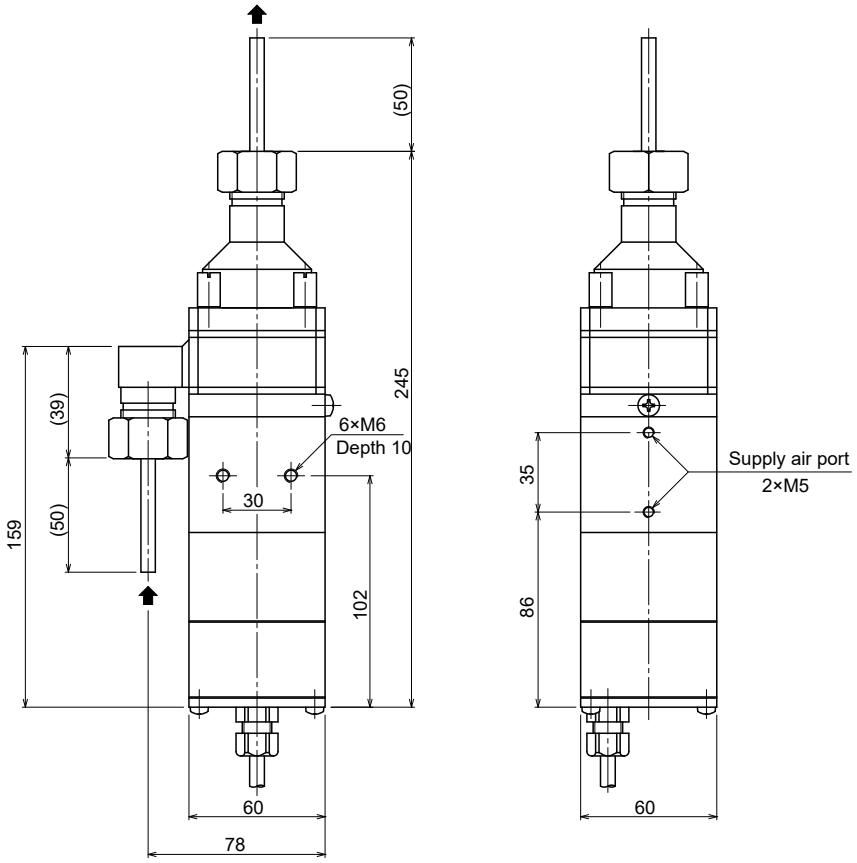

Exploded view

■ CFD-8T-B

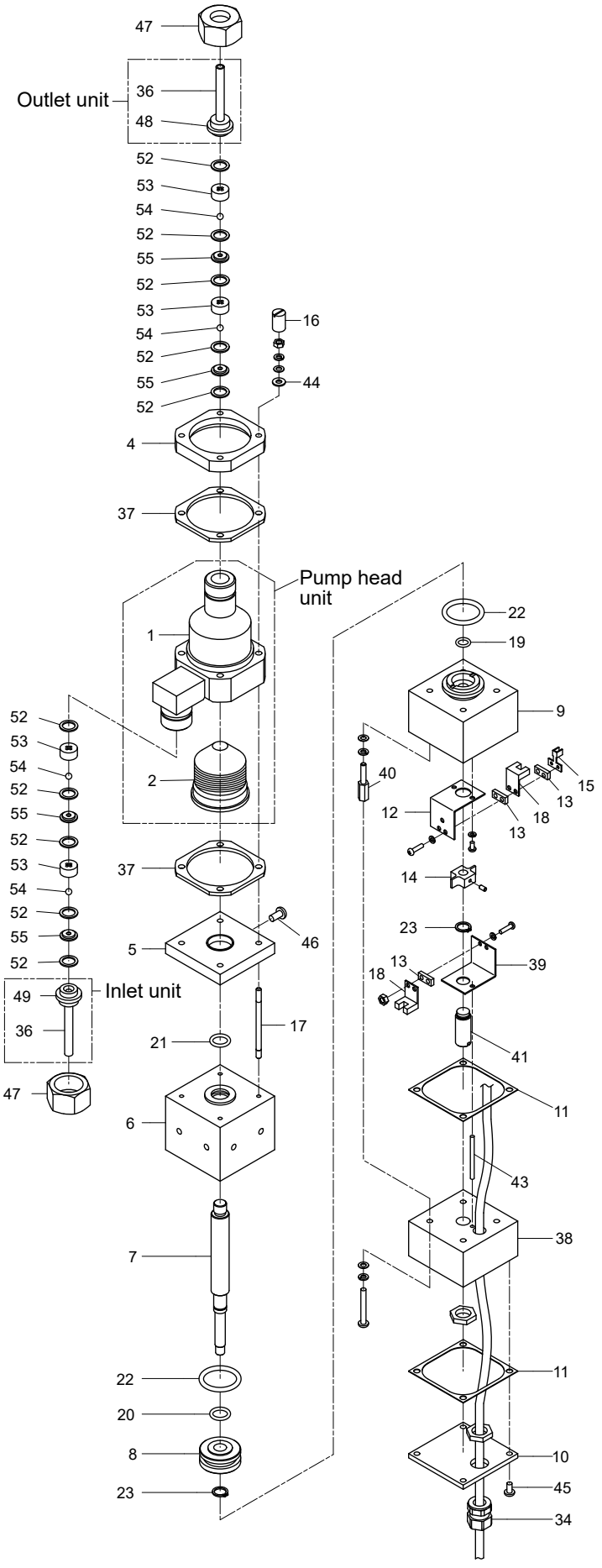

No.	Name	Q'ty	Material	Remarks
1	Pump head	1	PTFE	
2	Bellows	1	PTFE	
4	Flange A	1	PVC	
5	Flange B	1	PVC	
6	Cylinder	1	PVC	
7	Piston rod	1	SUS304	
8	Piston	1	POM	
9	Cylinder cover	1	PVC	
10	Cover	1	PVC	
11	Packing A	2	PTFE	
12	Installed base A	1	SUS304	
13	Spacer	3	PVC	
14	Guide plate	1	PVC	
15	Guide	1	SUS304	
16	Nut A	4	PVC	
17	Stud bolt	4	SUS304	
18	Sensor	2	–	
19	O ring	1	FKM	P-8
20	O ring	1	FKM	P-10
21	O ring	1	FKM	P-14
22	O ring	2	FKM	P-26
23	Stop ring	2	SUS304	S-10
34	Cord ground	1	PP	SCL-6B
36	Tube	2	PFA	1/4B (φ6.35×φ4.35)
37	Packing B	2	Silicon rubber	
38	Control case	1	PVC	
39	Installed base B	1	SUS304	
40	Fixed bolt	4	SUS304	
41	Control screw	1	SUS304	
43	Spring pin	1	SUS304	
44	Gasket	4	PTFE	
45	Screw	4	Stainless steel (PTFE coating)	M4×8
46	Screw	1	Stainless steel (PTFE coating)	M5×8
47	Valve cap	2	PP	
48	Discharge port	1	PTFE	
49	Suction port	1	PTFE	
52	Valve gasket	10	PTFE	
53	Valve guide	4	PTFE	
54	Valve	4	PTFE	
55	Valve seat	4	PCTFE	

EC DECLARATION OF CONFORMITY

A copy of the original Declaration of Conformity

(SUPPLIER'S NAME)

WE

IWAKI CO.,LTD.

(ADDRESS)

6-6 2-CHOME KANDA-SUDACHO CHIYODA-KU TOKYO JAPAN

(PRODUCT)

DECLARE UNDER OUR SOLE RESPONSIBILITY THAT THE PRODUCTS

PNEUMATIC DRIVE BELLOWS PUMP

(MODEL NAME)

CFD SERIES

TO WHICH THIS DECLARATION RELATES ARE IN CONFORMITY

WITH THE FOLLOWING STANDARDS OR DIRECTIVES AS FAR AS APPLICABLE

(DIRECTIVES)

MACHINERY DIRECTIVE 2006/42/EC (ANNEX IIA)
RoHS DIRECTIVE 2011/65/EU

(STANDARDS)

EN ISO12100: 2010 EN IEC63000: 2018
EN809: 1998 + A1: 2009

(A PERSON WHO IS AUTHORISED TO COMPILE THE TECHNICAL FILE IN THE COMMUNITY)

IWAKI EUROPE GMBH
SIEMENSRING 115 D-47877 WILLICH GERMANY

NOTE: THIS DECLARATION BECOMES INVALID IF TECHNICAL OR OPERATIONAL MODIFICATIONS ARE INTRODUCED WITHOUT THE MANUFACTURER'S CONSENT.

T. Sawada.

TSUTOMU SAWADA

SENIOR GENERAL MANAGER,

QUALITY ASSURANCE HEAD OFFICE

Tokyo, Feb. 20, 2023

(PLACE AND DATE OF ISSUE) **(NAME AND SIGNATURE OR EQUIVALENT MARKING OF AUTHORIZED PERSON)**

DOCUMENT NO. IS-51K-542-3

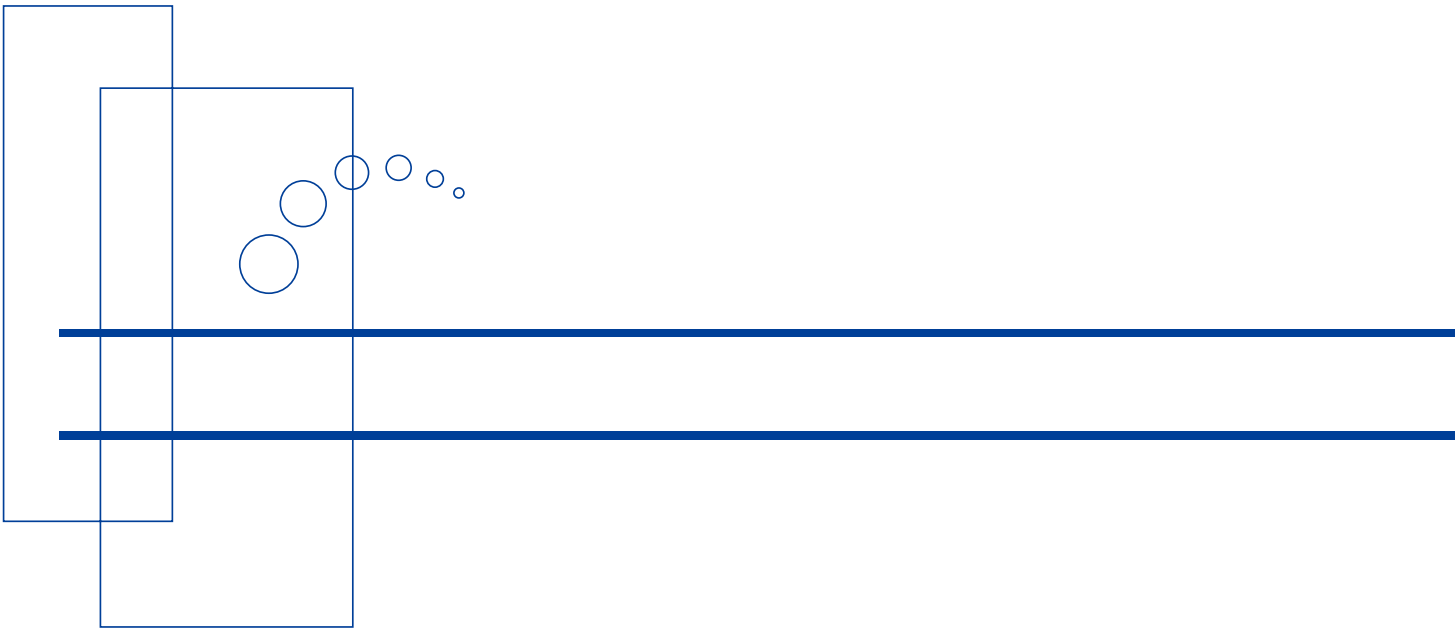

https://www.iwakipumps.jp

IWAKI CO.,LTD. 6-6 Kanda-Sudacho 2-chome Chiyoda-ku Tokyo 101-8558 Japan
TEL: +81 3 3254 2935 FAX: +81 3 3252 8892

European Headquarter / IWAKI Europe GmbH
TEL: +49 2154 9254 0 FAX: +49 2154 9254 48
Germany / IWAKI Europe GmbH
TEL: +49 2154 9254 50 FAX: +49 2154 9254 55
The Netherlands / IWAKI Europe GmbH (Netherlands Branch)
TEL: +31 74 2420011 FAX: +49 2154 9254 48
Italy / IWAKI Europe GmbH (Italy Branch)
TEL: +39 0445 561219 FAX: +39 0445 569088
Spain / IWAKI Europe GmbH (Spain Branch)
TEL/FAX: +34 934 741 638
Poland / IWAKI Europe GmbH (East Europe Branch)
TEL: +48 12 347 0755 FAX: +48 12 347 0900
Denmark / IWAKI Nordic A/S
TEL: +45 48 242345
Finland / IWAKI Suomi Oy
TEL: +358 10 201 0490
Norway / IWAKI Norge AS
TEL: +47 23 38 49 00
Sweden / IWAKI Sverige AB
TEL: +46 8 511 72900
Belgium / IWAKI Belgium N.V.
TEL: +32 13 670200 FAX: +32 13 672030
France / IWAKI France S.A.
TEL: +33 1 69 63 33 70 FAX: +33 1 64 49 92 73
U.S.A. / IWAKI America Inc.
TEL: +1 508 429 1440 FAX: +1 508 429 1386
Brazil / IWAKI Do Brasil Comercio De Bombas Hidraulicas LTDA.
TEL/FAX: +55 19 3244 5900
China (Shanghai) / IWAKI Pumps (Shanghai) Co., Ltd.
TEL: +86 21 6272 7502 FAX: +86 21 6272 6929
China (Hong Kong) / IWAKI Pumps Co., Ltd.
TEL: +852 2607 1168 FAX: +852 2607 1000
China (Guangzhou) / GFTZ IWAKI Engineering & Trading Co., Ltd.
TEL: +86 20 84350603 FAX: +86 20 84359181
China (Shenzhen) / IWAKI Pumps (Shenzhen) Co., Ltd.
TEL: +86 0755 8656 3696
Singapore / IWAKI Singapore Pte Ltd.
TEL: +65 6316 2028 FAX: +65 6316 3221
Indonesia / IWAKI Singapore Pte Ltd. (Indonesia Office)
TEL: +62 21 6906606 FAX: +62 21 6906612
Malaysia / IWAKIm SDN. BHD.
TEL: +60 3 7803 8807 FAX: +60 3 7803 4800
Korea / IWAKI Korea Co., Ltd.
TEL: +82 2 6238 4800 FAX: +82 2 6238 4801
Taiwan / IWAKI Pumps Taiwan Co., Ltd.
TEL: +886 2 8227 6900 FAX: +886 2 8227 6818
Thailand / IWAKI (Thailand) Co., Ltd.
TEL: +66 2 322 2471 FAX: +66 2 322 2477
Australia / IWAKI Pumps Australia Pty Ltd.
TEL: +61 2 9899 2411 FAX: +61 2 9899 2421

T1090-3 '26/10