IWAKI PUMPS

IWAKI
Electromagnetic Metering Pump
ES-B 24VDC Type (Multi tube connection)
Instruction Manual

⚠ Read this manual before use of product

Thank you for selecting an Iwaki ES series electromagnetic metering pump. This instruction manual deals with *"Safety instructions"*, *"Outline"*, *"Installation"*, *"Operation"* and *"Maintenance"* sections. Please read through this manual carefully to ensure the optimum performance, safety and service of your pump.

Contents

Important instructions ····· 1

Safety instructions ····· 2

Outline
1. Unpacking & Inspection 6
2. Safety & Caution notes 6
3. Principle of operation 6
4. Specifications 7

Installation
1. Pump mounting 9
2. Plumbing 10
3. Suction line 11
4. Discharge line 11
5. Check valve mounting 11
6. Wiring 13

Operation
1. Degassing 16
2. Flow rate adjustment 17

Maintenance
1. Diaphragm replacement 20
2. Valve replacement 20
3. Tubing 20
4. Troubleshooting 21
5. Wear part replacement 22
6. Model code 27
7. Dimensions 28
8. Exploded view 29

EC DECLARATION OF CONFORMITY 31

Waste Electrical and Electronic Equipment (WEEE) 32

This instruction manual should be kept on hand by the end user for quick reference.

Contact us or your nearest dealer if you have any questions.

Important instructions

For the Safe and
Correct Handling of the Pump

- "Safety Instruction" section deals with important details about handling of the product. Before use, read this section carefully for the prevention of personal injury or property damage.
- Observe the instructions accompanied with "WARNING" or "CAUTION" in this manual. These instructions are very important for protecting users from dangerous situations.
- The symbols on this instruction manual have the following meanings:

⚠ **WARNING**	**Nonobservance or misapplication of "Warning" sections could lead to a serious accident which may result in death.**
⚠ **CAUTION**	**Nonobservance or misapplication of "Caution" sections could lead to personal injury or property damage.**

Types of Symbols


Indicates that "Warning" or "Caution" must be exercised. Inside this triangle, a concrete and practical image provided as a warning or caution message is depicted.


Indicates a prohibited action or procedure. Inside or near this circle, a concrete and practical image of the activity to be avoided is depicted.


Indicates an important action or procedure which must be performed or carried out without fail. Failure to follow the instructions herein can lead to malfunction or damage to the pump.

⚠ Export Restrictions

Technical information contained in this instruction manual might be treated as controlled technology in your countries, due to agreements in international regime for export control. Please be reminded that export license/permission could be required when this manual is provided, due to export control regulations of your country.

Safety instructions

⚠WARNING

- **Turn off power before service**
  Risk of electrical shock. Be sure to turn off power to stop the pump and related devices before service is performed.



- **Stop operation**
  If you notice any abnormal or dangerous conditions, suspend operation immediately and inspect/solve problems.



- **Do not use the pump in any condition other than its intended purpose**
  The use of the pump in any conditions other than those clearly specified may result in failure or injury. Use this product in specified conditions only.



- **Do not modify the pump**
  Alterations to the pump carry a high degree of risk. It is not the manufacturer's responsibility for any failure or injury resulting from alterations to the pump.



- **Wear protective clothing**
  Always wear protective clothing such as an eye protection, chemical resistant gloves, a mask and a face shield during disassembly, assembly or maintenance work. The specific solution will dictate the degree of protection. Refer to SDS precautions from the solution supplier.



- **Do not damage the power cable**
  Do not pull, knot or crush the power cable. Damage to the power cable could lead to a fire or electrical shock if cut or broken.



- **Do not operate the pump in a flammable atmosphere**
  Do not place explosive or flammable material near the pump.



Safety instructions

⚠CAUTION

- **Qualified personnel only**
  The pump should be handled or operated by qualified personnel with a full understanding of the pump. Any person not familiar with the product should not take part in the operation or maintenance of the pump.



- **Use specified power only**
  Do not apply power other than that specified on the nameplate. Otherwise, failure or fire may result. Ensure the pump is properly grounded.



- **Do not run pump dry**
  Do not run pump dry for more than 30 minutes (even when the pump runs for degassing). Otherwise, the pump head fixing screws may loosen and liquid may leak. Optimise your system. If the pump runs dry for a long period (for more than 30 minutes), the pump head and the valve guide may deform by friction heat and consequently leakage results.



- **Keep electric parts and wiring dry**
  Risk of fire or electric shock. Install the pump where it can be kept dry.



- **Ventilation**
  Fumes or vapours can be hazardous with certain solutions. Ensure proper ventilation at the operation site.



- **Do not install/store the pump:**
  - In a flammable atmosphere.
  - In a dusty/humid environment.
  - Where ambient temperature can exceed 0-40ºC.
  - In direct sunlight or wind & rain.
  - Where ambient humidity can exceed 30-90%RH.

  Protect the pump with a cover when installing it out of doors.



- **Spill precautions**
  Ensure protection and containment of solution in the event of plumbing or pump damage (secondary containment).



- **Do not use the pump in a wet location**
  The pump is not waterproof. Use of the pump in wet or extremely humid locations could lead to electric shock or short circuit.



⚠CAUTION

- **Install a GFCI (earth leakage breaker)**
  An electrical failure of the pump may adversely affect other devices on the same line. Purchase and install a GFCI (earth leakage breaker) separately.


Electrical Shock

- **Preventative maintenance**
  Follow instructions in this manual for replacement of wear parts. Do not disassemble the pump beyond the extent of the instructions.



- **Do not use a damaged pump**
  Use of a damaged pump could lead to an electric shock or death.


Prohibited

- **Disposal of a used pump**
  Dispose of any used or damaged pump in accordance with local rules and regulations. See page 32 to comply with the European Directive 2012/19/EU on waste electrical and electronic equipment.



- **Check pump head bolts**
  Liquid may leak if any of the pump head bolts become loose. Tighten the bolts diagonally and evenly by the following torque before initial operation and at regular intervals (once a three month).

  Tightening torque

  ES-B11/-B16/-B21 : 2.16 N•m
  ES-B31 : 2.55 N•m


Caution

- **Install a relief valve**
  Install a relief valve on a discharge line near the pump so as to automatically release the discharge pressure when it exceeds the maximum level.



- **Always set the stroke length to 60% or more**
  The pump may not discharge liquid with the stroke length below 60% even if the maximum discharge pressure is observed. In this case the pump internal temperature rises and failure may result.


Caution

- **Set a stroke rate at 180spm or below for a long period of the external operation (more than 30 minutes)**
  Otherwise the coil temperature rises and failure may result.


Caution

- **Observe the correct polarity**
  Otherwise the pump may fail.


Caution

Outline

1. Unpacking & Inspection..... 6

2. Safety & Caution notes..... 6

3. Principle of operation..... 6

4. Specifications..... 7

Outline

1. Unpacking & Inspection

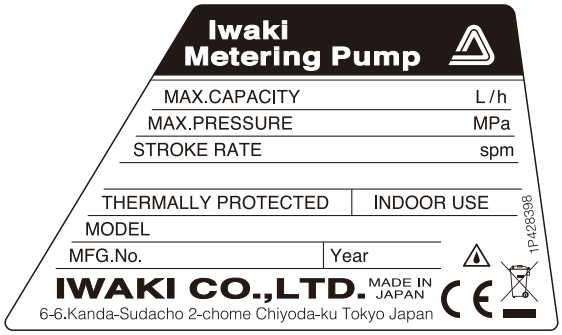

Open the package and check that the product conforms to your order. If any problem or inconsistency is found, immediately contact your distributor.

1. Check the nameplate to see if the information such as model codes, discharge capacity and discharge pressure are as ordered.
2. Check for transit damage and loose bolts.

*The CE marking on our product(s) is for us to market the product(s) into the European market, however, the CE marking does not ensure any safety or conformity of the product(s) outside the European market.
When the pump is incorporated into the equipment marketed in the European market, such equipment must meet all the requirements of applicable directives.
In such a case, any person who places the equipment on the market must carry a CE mark on the equipment as a manufacturer.

2. Safety & Caution notes

Avoid areas where ambient temperature exceeds 40 deg.C or falls below 0 deg.C, or where the pump or tubing would be exposed to direct sunlight.
Disconnect the pump from the power source before performing any maintenance.
Always wear proper protective clothing recommended by the chemical liquid supplier.
Depressurize the discharge line before disconnecting the tubing or performing maintenance on the pump.

3. Principle of operation

The ES series is a diaphragm metering pump which consists of a pump head and a drive unit with a built-in controller. A diaphragm is directly driven by electromagnetic force.
The pulse signal via the PCB generates the electromagnetic force to make reciprocating motion with the assistance of the spring force. The reciprocating motion is transferred to a diaphragm through a plunger and then volumetric change occurs in the pump head. This action transfers liquid along with pump head valve action.

4. Specifications

Capacity/Pressure rating

Model	B11	B16	B21	B31
Max. discharge capacity (L/H)	2.28	3.9	5.7	10.8
Max. discharge capacity (mL/min)	38	65	95	180
Max. discharge pressure (MPa)	1.0	0.7	0.4	0.2
Stroke length mm(%)	0.5-1.0 (50-100%)			0.43-0.85 (50-100%)
Stroke rate (spm)	0-360			
Connection tube size (mm)	ø4×ø9, ø4×ø6			ø8×ø13, ø9×ø12
Rated voltage (VDC)	24			
Permissible voltage range (VDC)	22.8-25.2			
Average power consumption (W)	22			
Average current (A)	1.8			
Weight (kg)	1.8			

NOTE 1. The data above is based on the operation with clean water at the rated voltage in ambient temperature.
NOTE 2. The discharge capacity is based on the operation with clean water at the max discharge pressure (100% stroke length and 360spm). A discharge capacity can exceed the max level as discharge pressure gets lower.
NOTE 3. Permissible ambient temperature: 0 - 40°C
NOTE 4. Permissible liquid temperature: 0 - 40°C
NOTE 5. Permissible relative humidity: 30 - 90%RH Non-condensing
NOTE 6. Permissible voltage fluctuation: ± 5% of the rated voltage
• Contact us for the delivery of slurry.
• The specifications may be changed for product improvement without prior notice.
NOTE 7. The power source shall satisfy the maximum current of 4A. If not, the performance above may not be obtained.
NOTE 8. Maximum noise level: 60dB at 1m (A scale)

⚠CAUTION

- **Always set stroke length to 60% or more**
  The pump may not discharge liquid with the stroke length below 60% even if the maximum discharge pressure is observed. In this case the pump internal temperature rises and failure may result.
- **Set a stroke rate at 180spm or below in a continuous external operation (more than 30 minutes)**
  Otherwise, the coil temperature rises and failure may result.

Liquid end materials

Liquid ends	VC
Pump head	PVC
Diaphragm	PTFE (bonded to EPDM)
Valve ball	Alumina ceramic
Valve seat	FKM
Valve guide	PVC
Gasket	PTFE
O ring	FKM

PVC: Polyvinyl chloride
PTFE: Polyterafluoroethylene
EPDM: Ethylene propylene diene monomer
FKM: Fluoroelastmer

Installation

1. Pump mounting.....9

2. Plumbing.....10

3. Suction line..... 11

4. Discharge line.....11

5. Check valve mounting..... 11

6. Wiring.....13

Installation

Installation of the pump, tubing, and wiring are described in this section.

⚠CAUTION
• Risk of electrical shock. Be sure to turn off power to stop the pump and related devices before service is performed. • If you notice any abnormal or dangerous conditions, suspend operation immediately and inspect/solve problems. • Do not place explosive or flammable material near the pump. • Do not use a damaged pump. Use of a damaged pump could lead to an electric shock or death.

1. Pump mounting

Select the optimal installation location and mount the pump.

Necessary tools

• Four M5 bolts (pump mounting) • An adjustable wrench or spanner

1. Select a level location, free from vibration, that won't hold liquid. Flooded suction installation is strongly recommended when handling liquids that generate gas bubbles (sodium hypochlorite or hydrazine solution).

2. Anchor the pump with the M5 bolts. Be sure to fix the pump at four points.

NOTE: If the pump is not installed level, output may be affected.

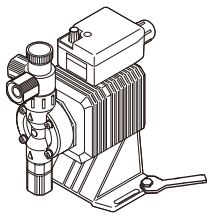

2. Plumbing

Connect tubes to the pump and install a check valve.

Necessary tools

• An adjustable wrench or a spanner

1. Cut the tube ends flat.

Tube end (side view)

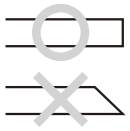

2. Pass a tube into the fitting nut and stopper and then slide it down to the adapter as far as it will go.

3. Put the tube end (adapter) in the fitting. Then hand tighten the fitting nut.

4. Retighten the fitting nut by turning it further 180 degrees with an adjustable wrench or spanner (crush tube mount).

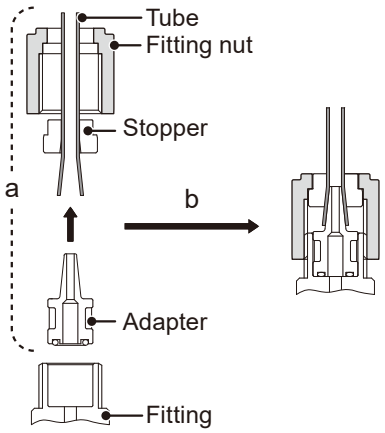

NOTE: Do not use excessive force to the plastic fitting nut.

NOTE: In your try to remove the connection, the adapter may be stuck in the crushed tube and the stopper. Try not to damage the taper of the adapter that is crushing the tube against the stopper. If it has been damaged, contact us for the new adapter/stopper.

NOTE: Do not reuse the same tube end for the crush sealing. Cut it off for ensuring the new seal is established.

3. Suction line

Have tubing shortest with the minimum number of bends. In the flooded suction system, install a gate valve on the suction line for easy maintenance. In the suction lift system, install a foot valve to the suction line end. The foot valve shall be located at least 25mm away from the bottom of the tank. Do not make an arched line where air may be trapped. To keep a straight tube line, lay the tube through the straight PVC pipe.

4. Discharge line

There is no limitation on the length of a discharge line, however, try not to bend or twist a tube. Install a check valve (optionally available) at the end of discharge line (injection point).

⚠CAUTION
Hastelloy or other metal springs in the check valve are attacked by some chemicals such as HCL. Contact us for a special check valve for this application.

5. Check valve mounting

Install an optional check valve to the ES for the prevention of a back flow, siphon and overfeeding. In the following cases be sure to install the check valve.

• A suction side liquid level is higher than a discharge side or an injection point at atmospheric pressure.

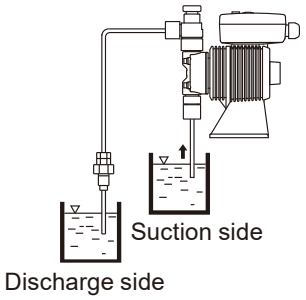

• A discharge side liquid level is higher than a suction side but the distance is 5m or below.

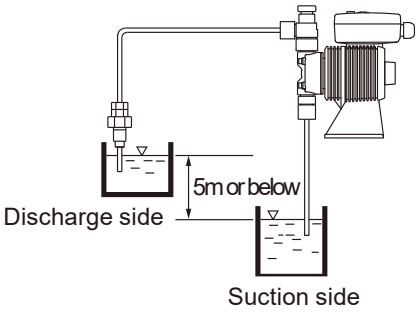

• A suction line pressure is higher than a discharge line pressure.

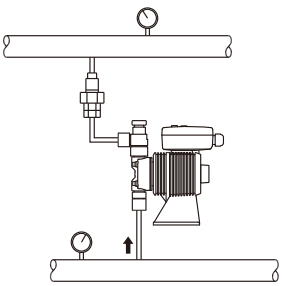

• A discharge pressure (including pipe resistance and discharge head) is below 0.13MPa.

1. Mount a check valve at the discharge tube end.

• The CAN check valve has R1/2 and R3/8 thread connections as well as an O.D. 9 mm tube connection. Cut off an unused part and adjust the connection length as necessary.

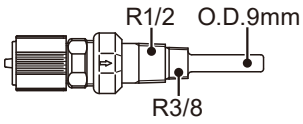

CAN check valve

• The CBN check valve (both ends tube connections) is optionally available. Contact us or your nearest distributor.

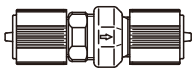

CBN check valve

NOTE: Periodically clean or replace a check valve with new one for the prevention of crystal clogging, especially when using sodium hypochlorite.

NOTE: In the nature of the pump, the lower discharge pressure, the higher discharge capacity (and vice versa). If you want to observe the max discharge capacity at any low level of system (/discharge) pressure, use the check/back pressure valve to give the additional pressure of 0.17MPa±0.04 to the discharge line or reduce the pump speed/stroke length.

■ Tubing layout

Flooded suction application

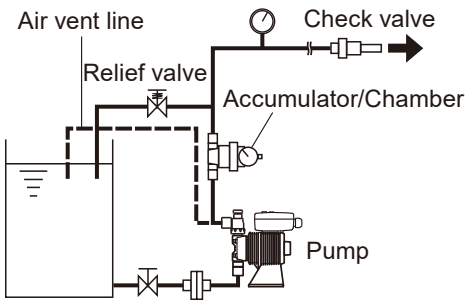

Suction lift application

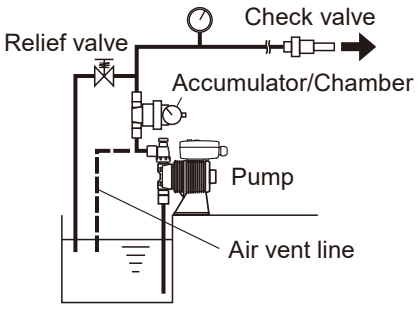

NOTE: Flooded suction installation is strongly recommended when handling liquids that generate gas bubbles (sodium hypochlorite or hydrazine solution).

6. Wiring

■ Power source

⚠CAUTION
Electrical work should be performed by a qualified electrician. Otherwise, personal injury or property damage could result.

Before wiring

- Be sure to turn off the pump and related devices.
- Note that the pump is not equipped with a switching device. The pump starts to run as powered on.
- Always observe local electric codes. Use suitable wiring materials.
- Power voltage: Arrange wiring between the white wire (+) and the black wire (-).

Precautions for ON-OFF control by the relay

When using a relay for ON-OFF operation, its contact capacity should be 15A or more. Or the contact point may fail.

⚠CAUTION
Observe the rated voltage range, or the electrical circuit in the control unit may fail.

■ External control

⚠CAUTION
● Risk of electrical shock or short circuit. Do not conduct wiring work while the pump is powered. ● The pump is still charged right after turning off power. Wait for one minute before wiring.

NOTE 1. The following products are the recommended SSRs (Solid State Relays) for signal input. Any other SSRs may cause malfunction. See manufacturer's information for details on these SSRs.
–OMRON G3FD-102S or G3FD-102SN
–OMRON G3TA-IDZR02S or G3TA-IDZR02SM
NOTE 2. When using a mechanical relay for signal input, its minimum application load should be 5mA or below.
NOTE 3. Use either a no-voltage contact or an open collector for the Input and Level sensor signals.
NOTE 4. Set pulse duration in 10-100ms (100Hz or below).

External signal

The ES-B features:

External operation : The input of the external signal controls pump spm. Arrange wiring between the red wire (external) and blue wire (common).

STOP function : The input of the external signal (no voltage contact or open collector signal) starts/stops the pump operation. Set pulse width from 10ms to 100ms. The number of pulses shall be at or below 360spm. Arrange wring between the yellow wire (STOP) and blue wire (common). Use the no voltage contact or open collector signal for the input of the stop signal.

⚠CAUTION
Set a stroke rate at 180spm or below for a continuous external operation (more than 30 minutes). Otherwise, the coil temperature rises and failure may result.

Wiring diagram

When a no-voltage contact is used

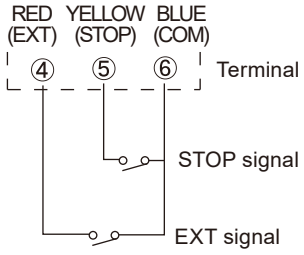

When an open collector signal is used

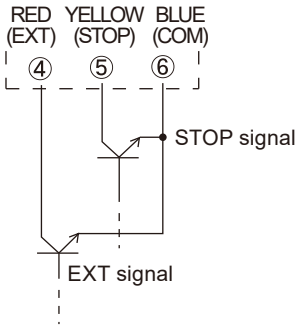

Operation

1. Degassing..... 16

2. Flow rate adjustment..... 17

Operation

Run the pump according to the following procedures after pipework and wiring are completed.

⚠CAUTION

- External operation
  Before the pump is operated by the external signal, be sure to set the stroke rate adjusting knob to "E" position. Otherwise failure may result.
  *Set a stroke rate at 180spm or below in a continuous external operation (more than 30 minutes). Otherwise the coil temperature rises and failure may result.
- Do not run the pump with a closed-discharge. Otherwise, leakage or pipe rupture may result. In addition, if a closed-discharge operation continues more than 30 minutes, pump internal temperature may rise significantly. This can lead to leakage when the pump head and valve cases are deformed or when the pump head becomes loose.
- Do not run pump dry. Once a pump runs dry, it carries the possibility of leakage. Be sure to check if the pump is primed before operation.
  *If the pump runs dry for longer than 30 minutes, the internal temperature of the pump rises, so that the pump head and valve guide deform and the pump head fixation becomes loose, resulting in leakage.
- Keep the pump head fixed. Otherwise leakage may result.
  *Retighten four pump head fixing bolts before starting the initial pump operation. The bolts may be loosened during storage or transit.
  *Tightening torque: 2.16N•m (B11/B16/B21)
  2.55N•m (B31)
  Always tighten the bolts diagonally and evenly by the tightening torque.

1. Degassing

Observe the above instructions to install the pump. Turn on the pump and set stroke rate to 100%. If the pump is equipped with an air vent port, open the adjusting screw by 1/2 turn. Then liquid starts to move into the pump head through the suction tube. When liquid starts to come out from the air bleed tube, close the adjusting screw. See the "Flow rate adjustment" section on next page. If an air vent port is not equipped, disconnect the discharge tube from your system. When liquid comes to the discharge tube from the pump head, set stroke rate to 0% to stop the pump and reconnect the discharge tube to your system.

2. Flow rate adjustment

First adjust the flow rate by the stroke rate adjustment. Adjust the stroke length for the range where stroke rate adjustment can not reach.

Precautions for stroke rate adjustment

- **When pumping gaseous liquid such as sodium hypochlorite (NaOCl) and hydrazine solution (N2H2O2)**
  Set stroke length to 100% and adjust the flow by changing stroke rate.
  Air lock may occur when stroke length is set short.
- **When back pressure is high**
  Set stroke length to 100% and adjust the flow by changing stroke rate.
- **When the flow rate per shot greatly affects neutralization or titration**
  Shorten the stroke length to reduce the flow rate per shot. And then adjust the flow by changing a stroke rate.

⚠CAUTION

Always set stroke length to 60% or more
The pump may not discharge liquid with the stroke length below 60% even if the maximum discharge pressure is observed. In this case the pump internal temperature rises and failure may result.

Procedure

Determine a suitable stroke length and stroke rate, taking account of the pump operating condition and liquid characteristics.

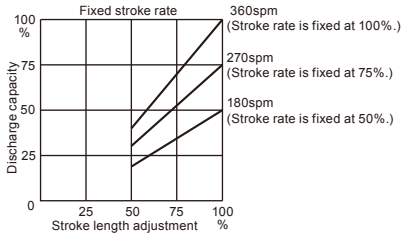

a. Set stroke length to 100% and then target a specified flow rate by changing a stroke rate.
b. Measure a flow rate.
c. If the flow rate have not reached a specified level, change a stroke rate and measure it again.
d. Change the stroke length for fine adjustment.

⚠CAUTION

- **Always set stroke length to 60% or more**
  The pump may not discharge liquid with the stroke length below 60% even if the maximum discharge pressure is observed. In this case the pump internal temperature rises and failure may result.
- Never turn the stroke length adjusting knob when the pump is stopped.

e. Measure the flow again to see if the specified flow is obtained.

Operation

Stroke rate adjustment

A stroke rate can be adjusted by changing the stroke rate adjusting knob.

• A stroke rate shall be changed between 20-360spm (10-100%).
  If a precise flow rate is required, measure the actual flow volume by minute.

Operation

Start the pump operation after degassing and flow rate adjustment are finished. Select either manual operation or external operation.

Manual operation

• The pump starts as powered on. At this time the LED on the controller starts to blink orange with each shot.
• The pump stops as powered off. At this time the LED stops blinking.

External operation

• The pump can be controlled by the external signal.
• Set the stroke rate adjusting knob to "E" position during wiring work.
• The pump makes one shot as receiving a signal. The pump can run at 0-360spm according to the number of signals.
• Use the no voltage contact signal or open collector signal.
• The pulse width of the external signal shall be 10-100msec.
• Set a stroke rate at 180spm or below in a continuous external operation (more than 30 minutes).
• Be sure to set the stroke rate adjusting knob to the "E" position in the external operation.

Stop function

The start/stop of the pump operation can be controlled by the external signal. Contact us or your nearest dealer for detail.

• The pump starts as powered on. At this time the LED on the controller starts to blink orange with each shot.
• The pump stops as receiving the stop signal. The LED stops blinking, staying orange.

Operation stop

The pump stops running and the LED disappears as powered off.

• Before a long period of stoppage (One month or more), run the pump with clean water for about thirty minutes to rinse the insides of the pump head and tubing.
• Before resuming operation after a long period of stoppage, clean the valve sets, removing foreign matters. If gas is in the pump head, expel gas and readjust the flow rate.

Maintenance

1. Diaphragm replacement.....20

2. Valve replacement.....20

3. Tubing.....20

4. Troubleshooting..... 21

5. Wear part replacement.....22

6. Model code.....27

7. Dimensions..... 28

8. Exploded view.....29

Maintenance

⚠ CAUTION
● Risk of electrical shock. Be sure to turn off power to stop the pump and related devices before service is performed. ● Solution in the discharge line may be under pressure. Release the pressure from the discharge line before disconnecting plumbing or disassembly of the pump to avoid solution spray.

1. Diaphragm replacement

Unplug the pump and disconnect the suction, discharge and air bleed tubes. Remove the four pump head fixing bolts with a 4mm hex wrench. Unscrew the diaphragm and remove a retainer (small disk behind the diaphragm). Install the new retainer and diaphragm on the shaft. Turn the diaphragm clockwise on the shaft until it bottoms. Refit the pump head and tighten the pump head fixing bolts by 2.16/2.55 N•m.

2.16N•m (B11/B16/B21)

2.55N•m (B31)

2. Valve replacement

Remove the suction & discharge tubes, the fittings and the valve set (valve ball×2, valve seat×2, valve guide×2, gasket×1 and O ring×1). Mount new valve sets. Be sure both valve seats are in the same orientation. Refer to the diagram below. Refit the fitting and connect tubes in the last place.

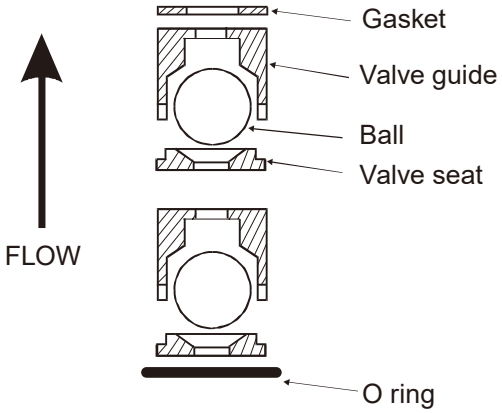

Valve seat orientation

3. Tubing

Check tube ends for splits, cracks & spots. Check entire tube length for wear and the damage due to exposure to excessive temperature or ultraviolet ray (direct sunlight or mercury vapour lamps). If any signs of deterioration exist, replace the entire tube. Replace the discharge tube every 12 months.

4. Troubleshooting

⚠ CAUTION

- Risk of electrical shock. Be sure to turn off power to stop the pump and related devices before service is performed.
- Solution in the discharge line may be under pressure. Release the pressure from the discharge line before disconnecting plumbing or disassembly of the pump to avoid solution spray.

Problem	Possible cause	Corrective action
Pump does not start	- Faulty wiring - Improper voltage - The control unit is damaged.	- Correct wiring. - Apply a proper voltage. - Replace the control unit.
Pump does not prime	- Air stays in suction line. - Valve gasket is not installed. - Valve set is set up improperly. - Air lock - Pump head valves are clogged with foreign matters. - A ball valve is stuck to the valve seat.	- Reroute suction line to eliminate air trap. - Install a valve gasket. - Set it properly. - Open an air vent valve. - Disassemble, inspect, clean the valves. - Disassemble, inspect, clean the valves.
Output fluctuates	- Pump head valves are clogged with foreign matters. - Air is trapped in pump. - Overfeeding - Diaphragm is damaged.	- Disassemble, inspect, clean the valves. - Open an air vent valve. - Install check valve or back pressure valve. - Replace diaphragm.
Liquid leaks	- Fitting or coupling nut is loose. - Pump head fixing bolts are loose. - Diaphragm is damaged. - O ring or valve gasket is missing.	- Retighten it. - Tighten pump head bolts. - Torque: 2.16N•m (B11/B16/B21) 2.55N•m (B31) - Replace diaphragm. - Install O ring or valve gasket.

❗ Check if the pump head fixing bolts are not loosen at every 3 months. Tighten them diagonally by the following torques. The fixing bolts may loosen during operation (An extent of looseness changes depending on operating conditions.).

Tightening torque of the pump head fixing screw

Model code	Torque	Part names
ES-B11/-B16/-B21	2.16N•m	M4 hex. socket head bolts
ES-B31	2.55N•m	M4 hex. socket head bolts

5. Wear part replacement

To run the pump for a long period, wear parts need to be replaced periodically. It is recommended that the following parts are always stocked for immediate replacement. Contact us or your nearest distributor for detail.

⚠CAUTION

- Solution in the discharge line may be under pressure. Release the pressure from the discharge line before disconnecting plumbing or disassembly of the pump to avoid solution spray.
- Rinse wet ends thoroughly with tap water.
- Each time the pump head is dismantled, replace the diaphragm, O rings, valve gaskets and valve sets with new ones.

■ Wear part list

	Parts		# of parts	Estimated life
Pump	Valve set	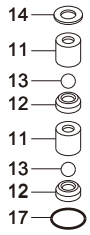	2 sets	8000 hours
	Diaphragm	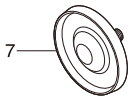	1	
	O ring		See page 30.	

*Wear part duration varies with the pressure, temperature and characteristics of liquid.
*The estimated life is calculated based on the continuous operation with clean water at ambient temperature.

■ Before replacement

First release pressure from the pump head.

1. Stop the pump operation.

2. Rotate the adjusting screw two revolutions anticlockwise to open the air vent port.

NOTE: Do not rotate it three revolutions from the closed position. Or liquid may come out from the adjusting screw.

3. Check the air vent line and the pump head are depressurized. Liquid pressure is released from the air vent line in the form of solution spray.

NOTE: If pressurized liquid is not expelled, run the pump with an opened air vent line until pressure is removed.

■ Valve set replacement

Necessary tools

• An adjustable wrench or spanner • A 21mm box wrench • A pair of tweezers

*Unfix the pump base before disassembly.

ES-B11/-B16/-B21/-B31 VC M discharge valve set

1. Loosen the fitting nut to remove the discharge tube and the air bleed tube.

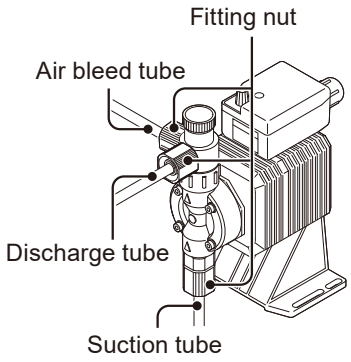

2. Turn the lock nut anticlockwise by an adjustable wrench and remove the air vent body A.

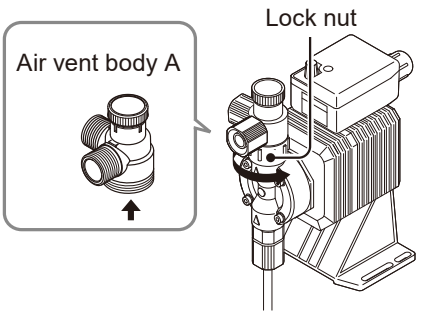

3. Remove the air vent body B by the 21mm box wrench.

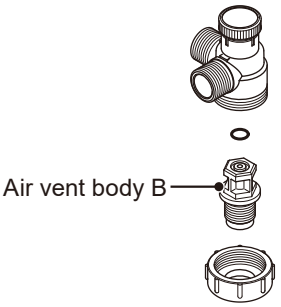

4. Pull out the valve set by a pair of tweezers.

5. Build up the new valve set into the pump head and fasten the air vent body B via the lock nut.

*Arrange the valve set in the correct parts order and direction. A leak or an insufficient flow may result.
*Be sure to fit O rings and gaskets in place.
*Keep the valve set clean.

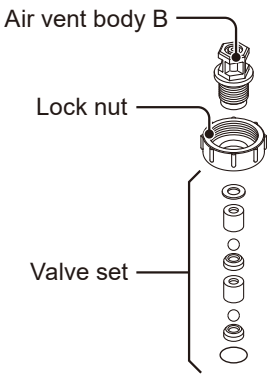

6. Remount the air vent body A and connect tubes.

ES-B11/-B16/-B21/-B31 VC M suction valve set

NOTE: Be careful not to drop the valve set.

1. Remove the fitting nut and the suction tube.

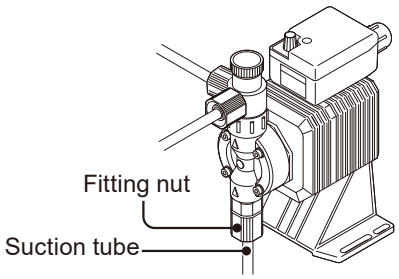

2. Remove the fitting by an adjustable wrench or a spanner.

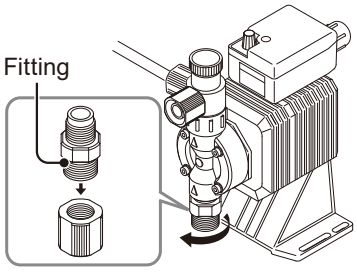

3. Pull out the valve set by a pair of tweezers.

4. Build up the new valve set into the pump head and hand-tighten the fitting as far as it will go. Retighten it by a further 1/4 turn with an adjustable wrench or a spanner.
   *Arrange the valve set in the correct parts order and direction. A leak or an insufficient flow may result.
   *Be sure to fit O rings and gaskets in place.
   *Keep the valve set clean.

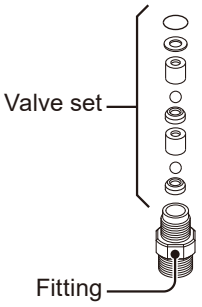

5. Reconnect the suction tube.

■ Diaphragm replacement

Necessary tools

• An adjustable wrench or spanner • A hexagon wrench • A torque wrench

NOTE: Pay attention not to loose diaphragm spacers. A few diaphragm spacers may be inserted between the retainer and plunger for the adjustment of a diaphragm location. Note that the number of diaphragm spacers provided varies at different pumps.

1. Run the pump and set the stroke length to 0%.
   Then stop the pump.

2. Loosen the fitting nuts and remove the suction tube, discharge tube, and air bleed tube.

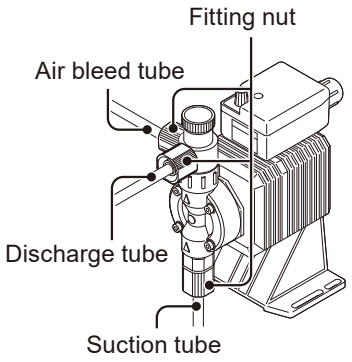

3. Remove the pump head with a hexagon wrench.

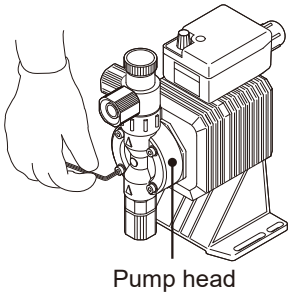

4. Unscrew the diaphragm from the plunger (pump shaft).

5. Slide the retainer and diaphragm spacer(s) onto the screw of the new diaphragm.

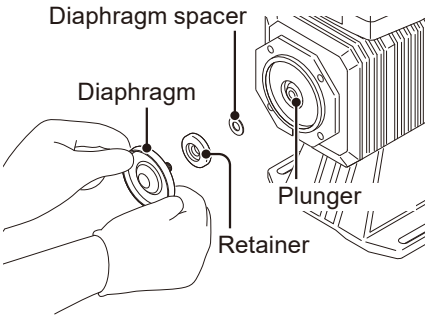

NOTE: Fit the retainer with its round edge to the diaphragm.

NOTE: Do not remove the bracket spacer. If removed, replace as shown to the right.

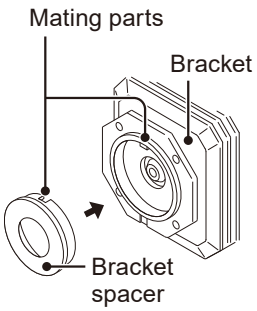

6. Screw the new diaphragm into the plunger as far as it will go.

7. Run the pump and set the stroke length to 100%. Stop the pump afterwards.

8. Mount the pump head. Tighten the bolts diagonally and evenly by the specified torque at each model.

Tightening torque

Model code	Torque	Bolts
ES-B11/-B16/-B21	2.16 N•m	M4 Hex. socket head bolt
ES-B31	2.55 N•m	M4 Hex. socket head bolt

6. Model code

Pump

ES - B 16 VC M - 24D 1 - □□
a b c d e f g h

a. Series name

ES: With manual stroke speed control

b. Drive unit

Average power consumption: B 22W

c. Diaphragm effective diameter

11: 10mm **16:** 15mm **21:** 20mm **31:** 30mm

d. Liquid end material

See the table of liquid end materials on page 7.

VC: Ceramic ball valves

e. Connection method

M: Multi tube connection

f. Power-supply voltage

24D: 22.8-25.2VDC

g. Tube connection I.D.

1: 4×9mm **2:** 4×6mm **4:** 8×13mm **5:** 9×12mm

h. Special version

Controller

ESC - B 24D - □□
a b c d

a. Series name

b. Drive unit

Code	Average power consumption
B	22W

c. Power source

Code	Voltage	Permissible voltage range
24D	24VDC	22.8-25.2VDC

d. Special version

7. Dimensions

ES-B11/-B16/-B21

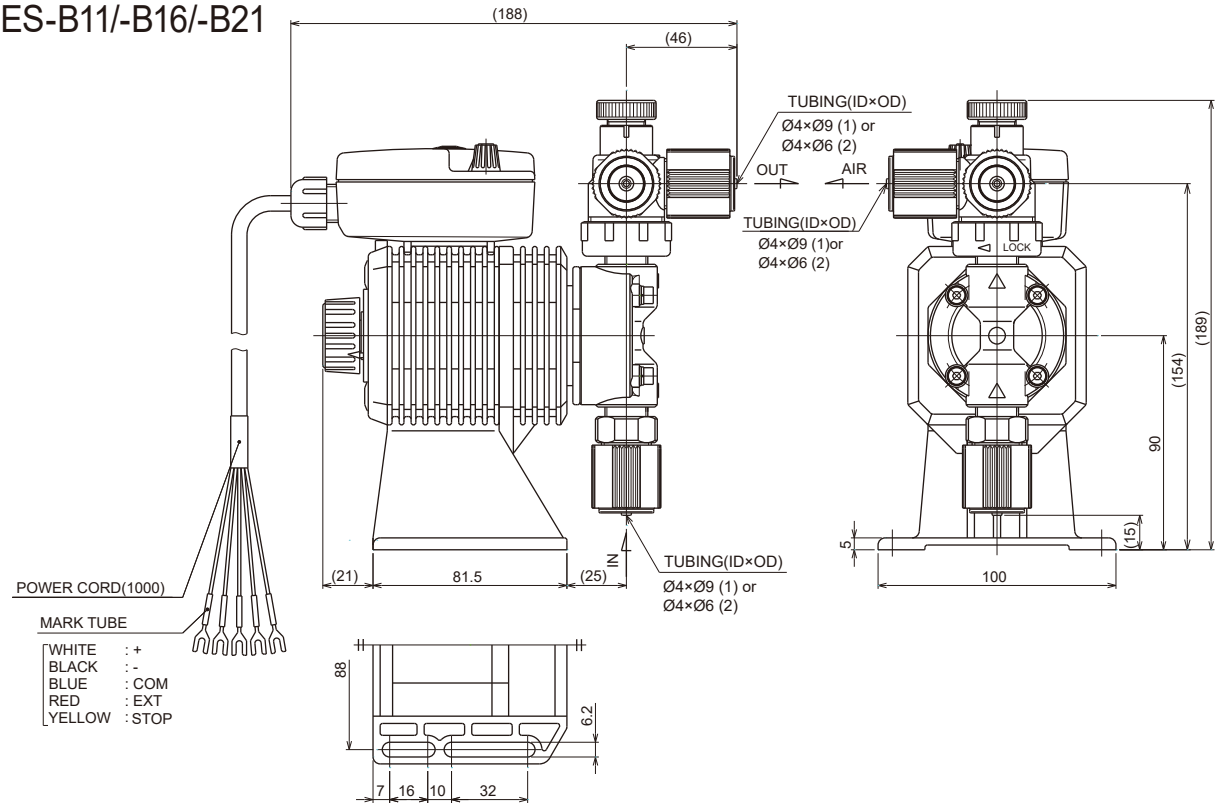

ES-B31

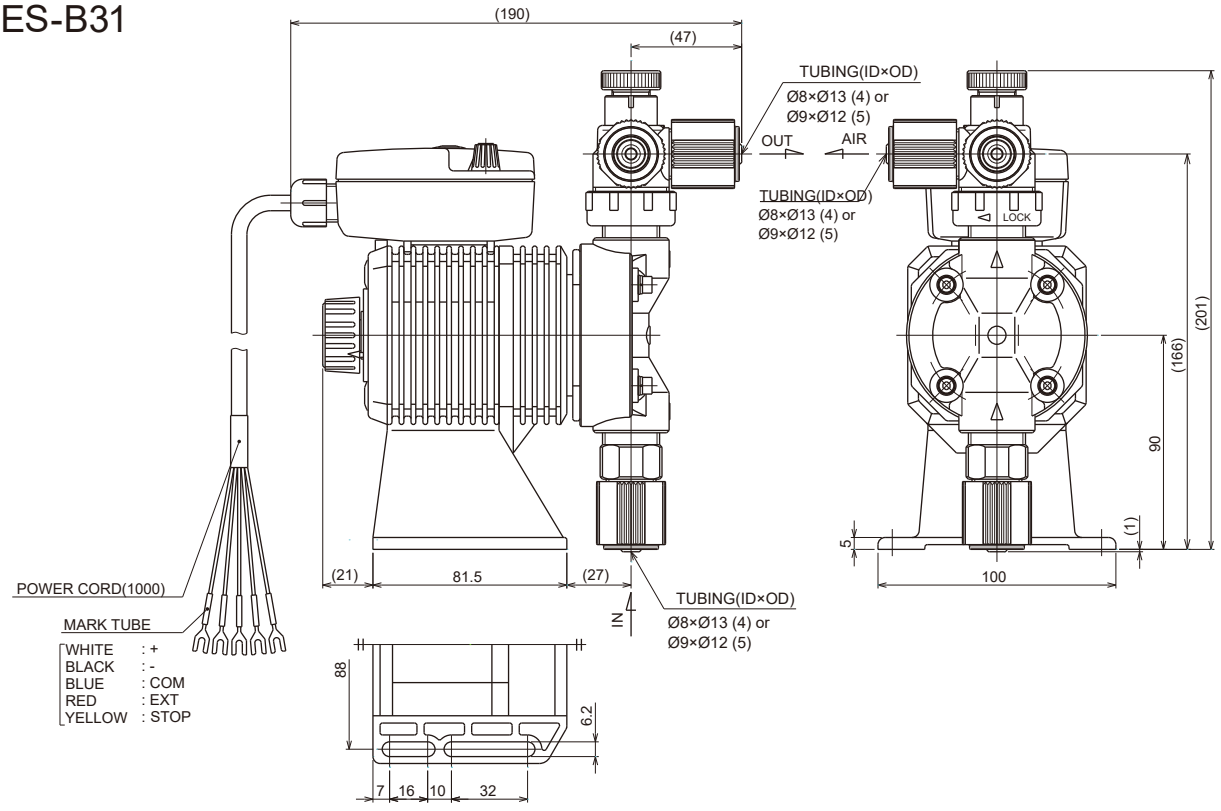

8. Exploded view

Models with thermoplastic liquid end materials and air vent valve

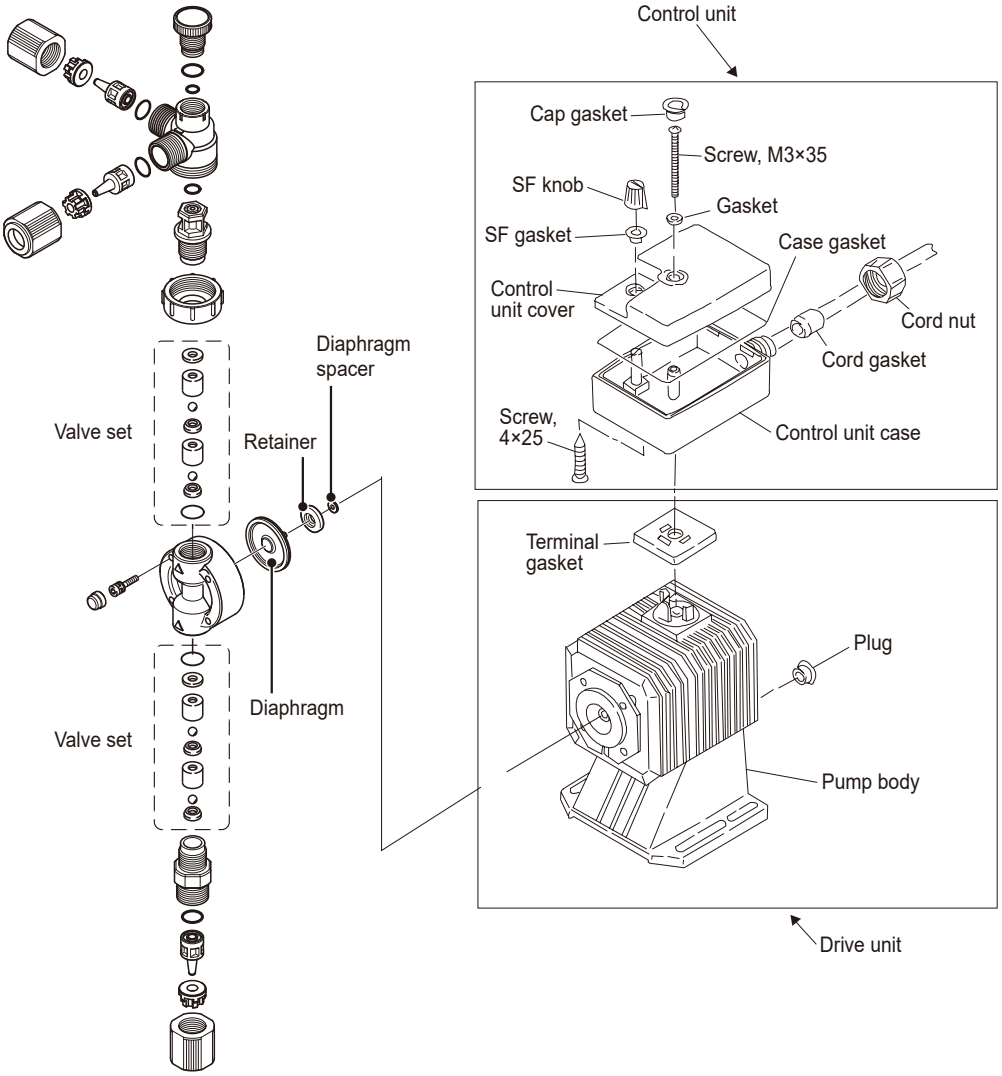

NOTE: The fitting nut (4) may differ from illustrated ones.

Pump head

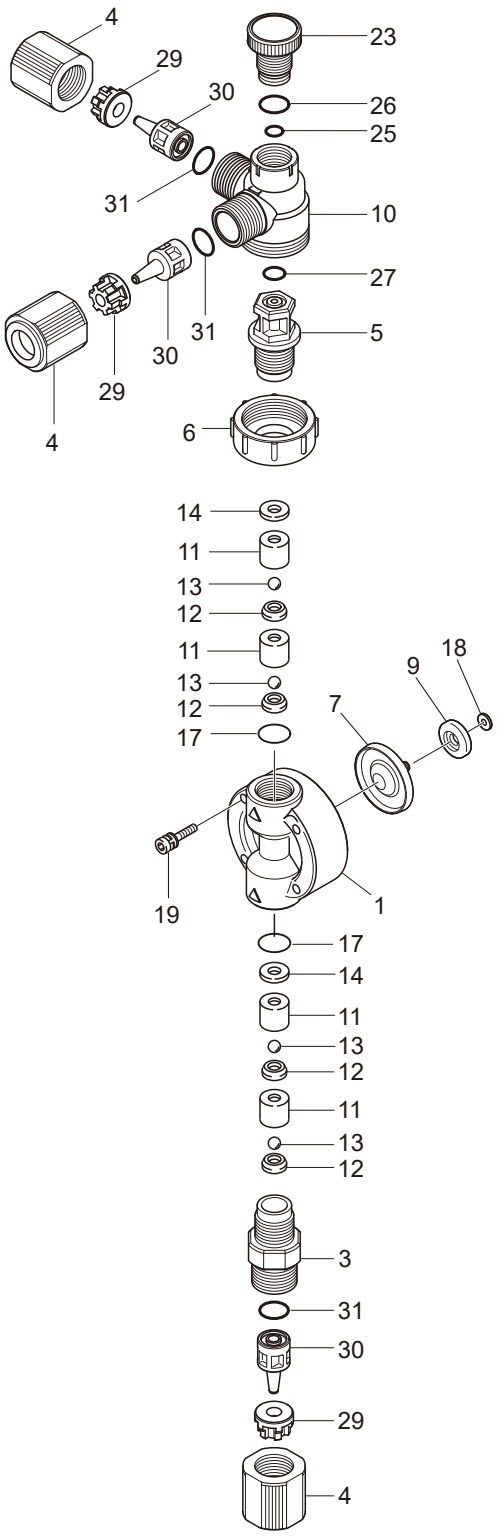

No.	Part names	# of parts
1	Pump head	1
3	Fitting	1
4	Fitting nut	3
5	Air vent body B	1
6	Lock nut	1
7	Diaphragm	1
9	Retainer	1
10	Air vent body A	1
11	Valve guide	4
12	Valve seat	4
13	Valve	4
14	Valve gasket	2
17	O ring	2
18	Diaphragm spacer	*1
19	Hex. socket head bolt [PW•SW]	4
23	Adjusting screw	1
25	O ring	1
26	O ring	1
27	O ring	1
29	Hose stopper	3
30	Hose adaptor	3
31	O ring	3

*1The number of diaphragm spacers varies with pump model.

EC DECLARATION OF CONFORMITY

A copy of the original Declaration of Conformity

(SUPPLIER'S NAME)

WE

IWAKI CO.,LTD.

(ADDRESS)

6-6 2-CHOME KANDA-SUDACHO CHIYODA-KU TOKYO JAPAN

(PRODUCT)

DECLARE UNDER OUR SOLE RESPONSIBILITY THAT THE PRODUCTS

ELECTROMAGNETIC METERING PUMP

(MODEL NAME)

ES-B SERIES DC TYPE

TO WHICH THIS DECLARATION RELATES ARE IN CONFORMITY

WITH THE FOLLOWING STANDARDS OR DIRECTIVES AS FAR AS APPLICABLE

(DIRECTIVES)

MACHINERY DIRECTIVE 2006/42/EC (ANNEX IIA)
EMC DIRECTIVE 2014/30/EU
RoHS DIRECTIVE 2011/65/EU

(STANDARDS)

EN ISO12100: 2010 EN61000-6-2: 2005 EN IEC63000: 2018
EN809: 1998 + A1: 2009 EN61000-6-3: 2007 + A1: 2011

(A PERSON WHO IS AUTHORISED TO COMPILE THE TECHNICAL FILE IN THE COMMUNITY)

IWAKI EUROPE GMBH
SIEMENSRING 115 D-47877 WILLICH GERMANY

NOTE: THIS DECLARATION BECOMES INVALID IF TECHNICAL OR OPERATIONAL MODIFICATIONS ARE INTRODUCED WITHOUT THE MANUFACTURER'S CONSENT.

T. Sawada.

TSUTOMU SAWADA

DEPUTY SENIOR GENERAL MANAGER,

QUALITY ASSURANCE HEAD OFFICE

Tokyo, Sep. 13, 2021

(PLACE AND DATE OF ISSUE) **(NAME AND SIGNATURE OR EQUIVALENT MARKING OF AUTHORIZED PERSON)**

DOCUMENT NO. IS-51K-561-2

Waste Electrical and Electronic Equipment (WEEE)

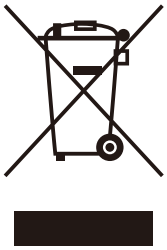

In accordance with the European Directive 2012/19/EU on waste electrical and electronic equipment, this product features the crossed-out wheelie bin symbol. When this product is disposed of in household wastes, toxic components included in it can cause major environmental and human health problems. Use appropriate waste collection systems for recovery and recycling. Contact your local distributor or nearest Iwaki company for the detailed collection systems.

IWAKI

https://www.iwakipumps.jp

IWAKI CO.,LTD. 6-6 Kanda-Sudacho 2-chome Chiyoda-ku Tokyo 101-8558 Japan
TEL: +81 3 3254 2935 FAX: +81 3 3252 8892

European Headquarter / IWAKI Europe GmbH
TEL: +49 2154 9254 0 FAX: +49 2154 9254 48
Germany / IWAKI Europe GmbH
TEL: +49 2154 9254 50 FAX: +49 2154 9254 55
The Netherlands / IWAKI Europe GmbH (Netherlands Branch)
TEL: +31 74 2420011 FAX: +49 2154 9254 48
Italy / IWAKI Europe GmbH (Italy Branch)
TEL: +39 0445 561219 FAX: +39 0445 569088
Spain / IWAKI Europe GmbH (Spain Branch)
TEL/FAX: +34 934 741 638
Poland / IWAKI Europe GmbH (East Europe Branch)
TEL: +48 12 347 0755 FAX: +48 12 347 0900
Denmark / IWAKI Nordic A/S
TEL: +45 48 242345
Finland / IWAKI Suomi Oy
TEL: +358 10 201 0490
Norway / IWAKI Norge AS
TEL: +47 23 38 49 00
Sweden / IWAKI Sverige AB
TEL: +46 8 511 72900
Belgium / IWAKI Belgium N.V.
TEL: +32 13 670200 FAX: +32 13 672030
France / IWAKI France S.A.
TEL: +33 1 69 63 33 70 FAX: +33 1 64 49 92 73
U.S.A. / IWAKI America Inc.
TEL: +1 508 429 1440 FAX: +1 508 429 1386
Brazil / IWAKI Do Brasil Comercio De Bombas Hidraulicas LTDA.
TEL/FAX: +55 19 3244 5900
China (Shanghai) / IWAKI Pumps (Shanghai) Co., Ltd.
TEL: +86 21 6272 7502 FAX: +86 21 6272 6929
China (Hong Kong) / IWAKI Pumps Co., Ltd.
TEL: +852 2607 1168 FAX: +852 2607 1000
China (Guangzhou) / GFTZ IWAKI Engineering & Trading Co., Ltd.
TEL: +86 20 84350603 FAX: +86 20 84359181
China (Shenzhen) / IWAKI Pumps (Shenzhen) Co., Ltd.
TEL: +86 0755 8656 3696
Singapore / IWAKI Singapore Pte Ltd.
TEL: +65 6316 2028 FAX: +65 6316 3221
Indonesia / IWAKI Singapore Pte Ltd. (Indonesia Office)
TEL: +62 21 6906606 FAX: +62 21 6906612
Malaysia / IWAKIm SDN. BHD.
TEL: +60 3 7803 8807 FAX: +60 3 7803 4800
Korea / IWAKI Korea Co., Ltd.
TEL: +82 2 6238 4800 FAX: +82 2 6238 4801
Taiwan / IWAKI Pumps Taiwan Co., Ltd.
TEL: +886 2 8227 6900 FAX: +886 2 8227 6818
Thailand / IWAKI (Thailand) Co., Ltd.
TEL: +66 2 322 2471 FAX: +66 2 322 2477
Australia / IWAKI Pumps Australia Pty Ltd.
TEL: +61 2 9899 2411 FAX: +61 2 9899 2421

T914-4 '26/09