Iwaki
Electromagnetic Metering Pump

EWN-Y

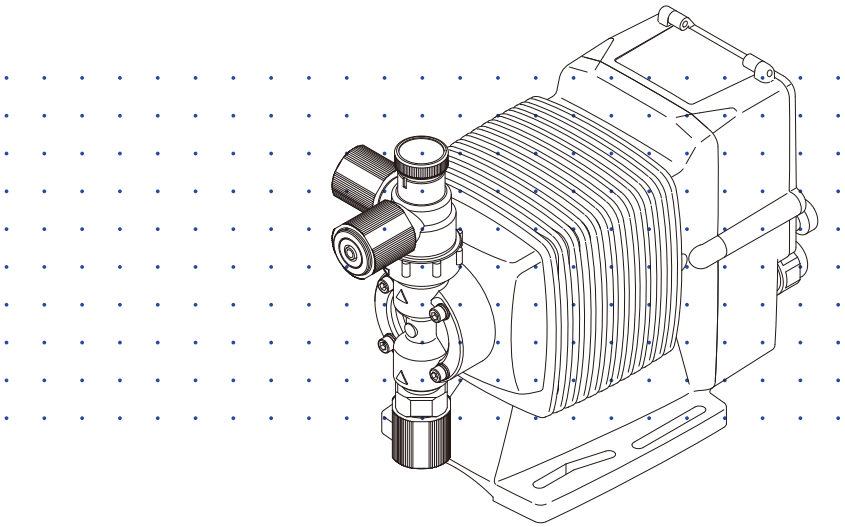

Instruction manual

Thank you for choosing our product.

⚠ Please read through this instruction manual before use.

This instruction manual describes important precautions and instructions for the product. Always keep it on hand for quick reference.

© 2011 IWAKI CO., LTD.

Order confirmation

Open the package and check that the product conforms to your order. If any problem or inconsistency is found, immediately contact your distributor.

a. Check if the delivery is correct.

Check the nameplate to see if the information such as model codes, discharge capacity and discharge pressure are as ordered.

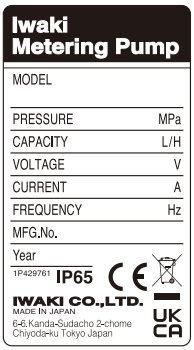

Spec label for the EU/GB markets

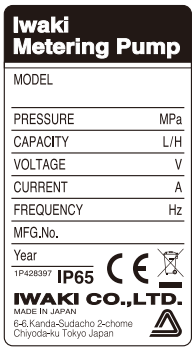

Spec label for the EU market

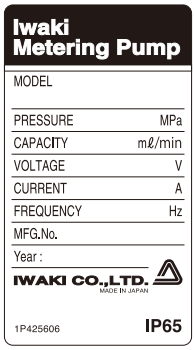

Spec label for any area other than the EU/GB markets

*The CE/UKCA markings on our product(s) are for us to market the product(s) into the European Union market / the Great Britain (England, Wales and Scotland) market, however, the CE/UKCA markings do not ensure any safety or conformity of the product(s) outside the EU/GB markets.
When the pump is incorporated into the equipment marketed in the EU/GB markets, such equipment must meet all the requirements of applicable directives/regulations.
In such a case, any person who places the equipment on the markets must carry CE/UKCA marks on the equipment as a manufacturer.

b. Check if the delivery is damaged or deformed.

Check for transit damage and loose bolts.

Contents

Order confirmation **2**

Safety instructions ***7***

Warning **8**
Caution **9**
Precautions for use **11**

Overview ***13***

Introduction **13**
Pump structure & Operating principle 13
Auto degassing system 14
Features 15
Operational functions **15**
Manual mode 15
EXT mode 16
Digital control 16
Analogue proportional control 17
Pulse proportional control 19
PRIME mode 20
Control functions 21
STOP function 21
Pre-STOP function 21
AUX function 22
Interlock function 22
Output functions 22
OUT1 (mechanical relay) 22
OUT2 (photoMOS relay) 23
Analogue output 23
Control with external devices **24**
Combination with the EFS flow sensor 24
Feedback control 25
Batch control 26
Combination with the FCP and FCM flow checker/counter 28
A. MODE 28
B. MODE 29
C. MODE 30
D. MODE 31

Part names **32**
Pump 32
Operational panel 33
Basic displays & Pump states 34
Identification codes **35**
Pump/Drive units 35

Installation ***37***

Pump mounting **37**
Plumbing **38**
Tube connection 38
Check valve mounting 40
Wiring (pump) **42**
End terminals 43
Power voltage/Earthing 43
Signal wire connection 45
STOP signal 46
Input signal 47
Output signal 47
Wiring (external devices) **48**
EFS flow sensor mounting (purchase separately) 48
FCP/FCM mounting (purchase separately) 51
Flow counter (FCP) 51
Flow checker (FCM) 51
FCP/FCM wiring 52

Operation ***53***

Before operation **53**
Points to be checked 53
Retightening of pump head fixing bolts 53
Use of hexagon wrench instead of a torque wrench 54
Stroke rate adjustment 54
Degassing 55
EWN VC/VH/VS/PC/PH/PS/TC/PP/SH 55
EWN FC/PC-V/P6-V 57
Flow rate adjustment 59
Stroke rate adjustment 61
Stroke length adjustment 62
Flow calibration 63
Before a long period of stoppage (one month or more) 64
Operation programming **65**
Programming flow 68

Manual operation 70
EXT operation 71
Digital control 71
Buffer ON/OFF selection (MULT/DIV) 72
Analogue proportional control 73
Pulse proportional control 78
Priming function 81
Keypad lock 81
Keypad lock activation 81
Keypad lock release 82
Emergency stop with a keypad lock state 82
Unit change 83
Stroke rate unit 83
Flow rate unit 83
User mode 84
Output setting 85
INPUT setting 88
EXT mode setting 90
FCP/FCM setting 90
PIN number entry 93
Operation history 94
Combination with the EFS flow sensor 95
Feedback control 95
Batch control 96
Buffer ON/OFF selection (Batch) 97
Default setting 98
Out of measurement and Poor flow alarms (OUT1 & 2) 99

Maintenance 101

Troubleshooting 102
Error codes 103
Error code information 103
Countermeasures 103
Error display 103
Inspection 104
Daily inspection 104
Periodic inspection 104
Wear part replacement 105
Wear part list 105
Before replacement 106
Valve set replacement 106
Discharge valve set disassembly/assembly 106

Suction valve set disassembly/assembly 108
Spacer set replacement (auto degassing type) 109
Air vent valve set replacement (auto degassing type) 110
Diaphragm replacement 110
Exploded view 113
Pump head, Drive unit & Control unit 113
Pump head 114
EWN VC/VH/VS/PC/PH/PS/TC 114
EWN FC 115
EWN SH 116
EWN-C31 PC-V/P6-V 117
EWN-B11/-B16/-C16/-C21 VC-A/VH-A 118
Specifications/Outer dimensions 119
Specifications 119
Pump unit 119
Control unit 122
European power cable 123
Australian power cable 123
Pump colour 123
Outer dimensions 124
EWN-B11/-B16/-B21/-C16/-C21 VC/VH/PC/PH 124
EWN-B31/-C31 VC/VS/PC/PS 124
EWN-C36 VC/VS/PC/PS 125
EWN-B11/-B16/-B21/-C16/-C21 FC 125
EWN-B31/-C31 FC 126
EWN-C36 FC 126
EWN-B11/-B16/-B21/-C16/-C21 TC 127
EWN-B31/-C31 TC 127
EWN-C36 TC 128
EWN-B11/-B16/-B21/-C16/-C21 SH 128
EWN-B31/-C31 SH 129
EWN-C36 SH 129
EWN-B11/-B16/-B21/-C16/-C21 VC-C/VH-C (high compression type) 130
EWN-B11 PC-H/PH-H (high pressure type) 130
EWN-C16 PC-H/PH-H (high pressure type) 131
EWN-B11/-C16 SH-H (high pressure type) 131
EWN-C31 PC-V/P6-V (high viscosity type) 132
EWN-B11/-B16 (auto degassing type) 132
EWN-C16/-C21 (auto degassing type) 133
EC DECLARATION OF CONFORMITY 134
UK DECLARATION OF CONFORMITY 135

Safety instructions

Read through this section before use. This section describes important information for you to prevent personal injury or property damage.

■ Symbols

In this instruction manual, the degree of risk caused by incorrect use is noted with the following symbols. Please pay attention to the information associated with the symbols.

⚠ **WARNING**	Indicates mishandling could lead to a fatal or serious accident.
⚠ **CAUTION**	Indicates mishandling could lead to personal injury or property damage.

A symbol accompanies each precaution, suggesting the use of "Caution", "Prohibited actions" or specific "Requirements".

Caution marks		Prohibited mark		Requirement mark		
						
Caution	Electrical shock	Prohibited	Do not rework or alter	Requirement	Wear protection	Grounding

⚠ Export Restrictions

Technical information contained in this instruction manual might be treated as controlled technology in your countries, due to agreements in international regime for export control.

Please be reminded that export license/permission could be required when this manual is provided, due to export control regulations of your country.

⚠ WARNING

Turn off power before service

Risk of electrical shock. Be sure to turn off power to stop the pump and related devices before service is performed.



Stop operation

If you notice any abnormal or dangerous conditions, suspend operation immediately and inspect/solve problems.



Do not use the pump in any condition other than its intended purpose

The use of the pump in any conditions other than those clearly specified may result in failure or injury. Use this product in specified conditions only.



Do not modify the pump

Alterations to the pump carry a high degree of risk. It is not the manufacturer's responsibility for any failure or injury resulting from alterations to the pump.



Wear protective clothing

Always wear protective clothing such as an eye protection, chemical resistant gloves, a mask and a face shield during disassembly, assembly or maintenance work. The specific solution will dictate the degree of protection. Refer to SDS precautions from the solution supplier.



Do not damage the power cable

Do not pull, knot, or crush the power cable. Damage to the power cable could lead to a fire or electrical shock if cut or broken.



Do not operate the pump in a flammable atmosphere

Do not place explosive or flammable material near the pump.



⚠CAUTION

Qualified personnel only

The pump should be handled or operated by qualified personnel with a full understanding of the pump. Any person not familiar with the product should not take part in the operation or maintenance of the pump.


Requirement

Use specified power only

Do not apply power other than that specified on the nameplate. Otherwise, failure or fire may result. Ensure the pump is properly grounded.


Prohibited

Do not run pump dry

Do not run pump dry for more than 30 minutes (even when the pump runs for degassing). Otherwise, the pump head fixing screws may loosen and liquid may leak. Optimise your system. If the pump runs dry for a long period (for more than 30 minutes), the pump head and the valve guide may deform by friction heat and consequently leakage results.


Caution

Keep electric parts and wiring dry

Risk of fire or electric shock. Install the pump where it can be kept dry.


Prohibited

Ventilation

Fumes or vapours can be hazardous with certain solutions. Ensure proper ventilation at the operation site.


Caution

Do not install/store the pump:

- In a flammable atmosphere.
- In a dusty/humid environment.
- Where ambient temperature can exceed 0-40ºC.
- In direct sunlight or wind & rain.
- Where ambient humidity can exceed 90%RH.

Protect the pump with a cover when installing it out of doors.


Prohibited

Spill precautions

Ensure protection and containment of solution in the event of plumbing or pump damage (secondary containment).


Requirement

Do not use the pump in a wet location

The pump is not waterproof. Use of the pump in wet or extremely humid locations could lead to electric shock or short circuit.


Prohibited

Grounding

Risk of electric shock! Always properly ground the pump. Conform to local electric codes.


Grounding

Install a GFCI (earth leakage breaker)

An electrical failure of the pump may adversely affect other devices on the same line. Purchase and install a GFCI (earth leakage breaker) separately.


Electrical shock

Preventative maintenance

Follow instructions in this manual for replacement of wear parts. Do not disassemble the pump beyond the extent of the instructions.


Requirement

Do not use a damaged pump

Use of a damaged pump could lead to an electric shock or death.


Prohibited

Disposal of a used pump

Dispose of any used or damaged pump in accordance with local rules and regulations. If necessary, consult a licensed industrial waste disposal company.


Requirement

Check pump head bolts

Liquid may leak if any of the pump head bolts become loose. Tighten the bolts diagonally and evenly by the following torque before initial operation and at regular intervals (once a three month).


Caution

Tightening torque

EWN-B09/-B11/-B16/-B21/-C16/-C21	: 2.16 N•m
EWN-B31/-C31/-C36	: 2.55 N•m

Install a relief valve

Install a relief valve on a discharge line near the pump so as to automatically release the discharge pressure when it exceeds the maximum level.


Requirement

Precautions for use

- Electrical work should be performed by a qualified electrician. Otherwise, personal injury or property damage could result.



- Select a level location, free from vibration, that won't hold liquid. Anchor the pump with four M5 bolts so it doesn't vibrate. If the pump is not installed level, output may be affected.

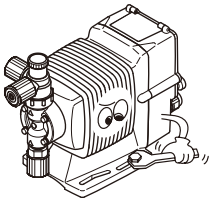

- When two or more pumps are installed together, vibration may be significant, resulting in poor performance or failure. Select a solid foundation (concrete) and fasten anchor bolts securely to prevent vibration during operation.



- Allow sufficient space around the pump for easy access and maintenance.



- Install the pump as close to the supply tank as possible.



- When handling liquids that generate gas bubbles (sodium hypochlorite or hydrazine solution), install the pump in a cool and dark place. Flooded suction installation is strongly recommended.



- Use care handling the pump. Do not drop. An impact may affect pump performance. Do not use a pump that has been damaged to avoid the risk of electrical damage or shock.

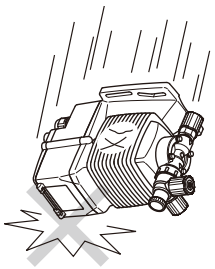

- The pump has a rating of IP65, but is not waterproof. Do not operate the pump while wet with solution or water. Failure or injury may result. Immediately dry off the pump if it gets wet.



- Do not close discharge line during operation. Solution may leak or piping may break. Install a relief valve to ensure safety and prevent damaged plumbing.



- Do not remove the control unit. Note that an applicable control unit differs with each drive unit. Do not attach a control unit to a different drive unit. Otherwise, an electrical circuit or the drive unit may fail.



- Solution in the discharge line may be under pressure. Release the pressure from the discharge line before disconnecting plumbing or disassembly of the pump to avoid solution spray.



- Wear protective clothing when handling or working with pumps. Consult solution SDS for appropriate precautions. Do not come into contact with residual solution.



- Do not clean the pump or nameplate with a solvent such as benzine or thinner. This may discolour the pump or erase printing. Use a dry or damp cloth or a neutral detergent.



- In accordance with the European Directive 2012/19/EU on waste electrical and electronic equipment (WEEE), this product features the crossed-out wheelie bin symbol. When this product is disposed of in household wastes, toxic components included in it can cause major environmental and human health problems. Use appropriate waste collection systems for recovery and recycling. Contact your local distributor or nearest Iwaki company for the detailed collection systems.

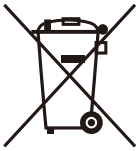

Overview

Pump characteristics, features and part names are described in this section.

Introduction

Pump structure & Operating principle

The EWN-Y is a diaphragm metering pump which consists of a pump head, drive unit and control unit, and features the external and feedback control with the EFS flow sensor or other devices.

Principle of operation

The pulse signal controls the electromagnetic force and spring force in order to make reciprocating motion. The reciprocating motion is transferred to a diaphragm through a plunger and then volumetric change occurs in the pump head. This action transfers liquid along with pump head valve action.

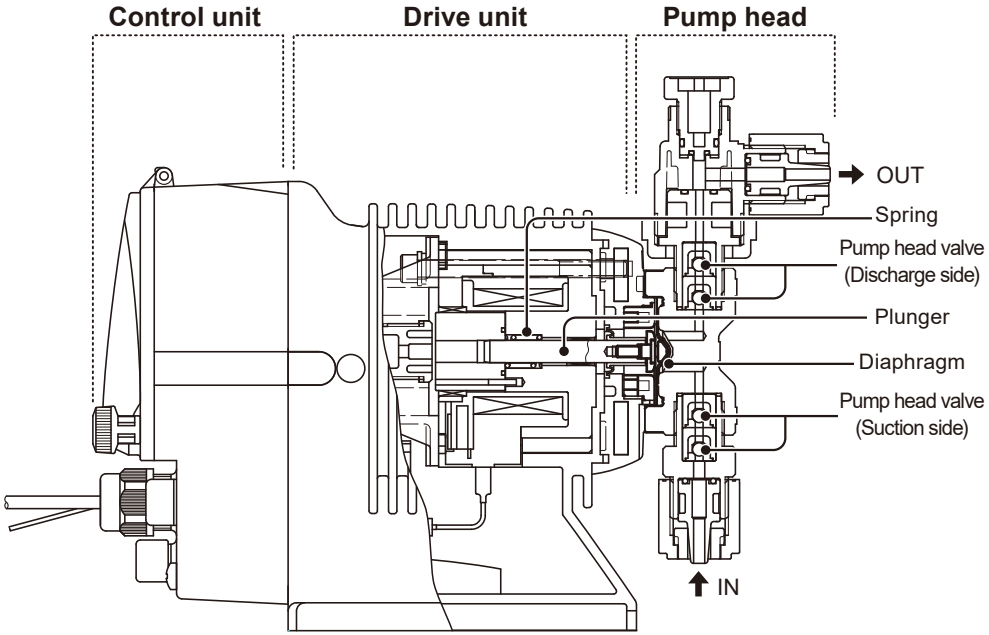

■ Auto degassing system

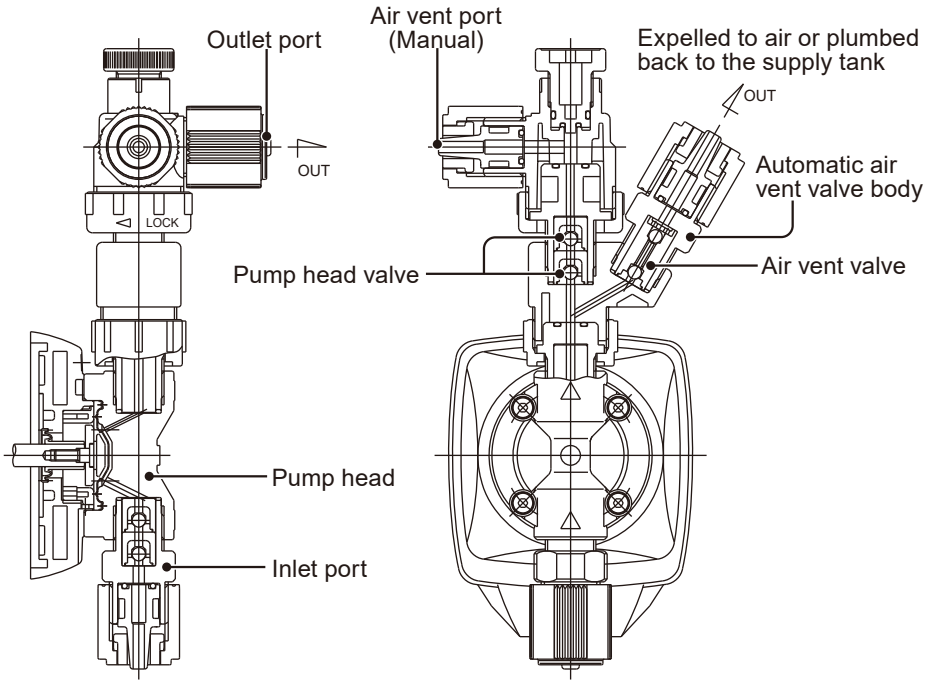

The lower opening pressure (open air pressure) of the auto vent valves than the outlet check valves lead the entrained gas to the open air via the branched air vent route. Once all gas in the pump head is expelled, liquid starts to flow the main path to the outlet.

Features

- **Multivoltage operation**

  The EWN-Y series is a multivoltage type (100-240VAC, 50/60Hz) and can be selected without concern for local power voltage.

- **Waterproof and dustproof structure**

  The sealed drive unit and control unit assure IP65.

  *This pump is not waterproof. Protect the pump with a cover when installing it out of doors.

- **Feedback control (with the EFS flow sensor)**

  Use of the EFS automatically controls a stroke rate to meet the target flow rate under any pressure fluctuation.

  *This pump is not waterproof. Protect the pump with a cover when installing it out of doors.

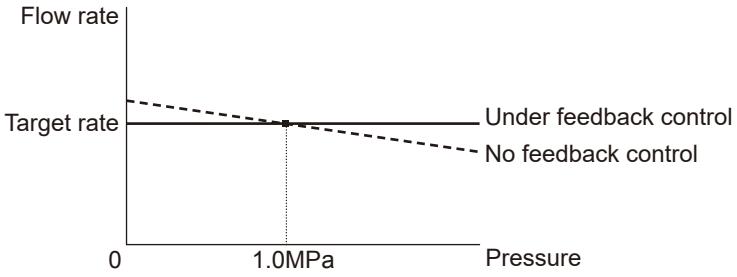

Operational functions

Manual mode

Run/stop the pump by the start/stop key. A stroke rate (MAN speed) can be changed in the range of 0-100%(/1-360spm) by the up and the down keys at any time during operation or stop. See page 70 for detail.

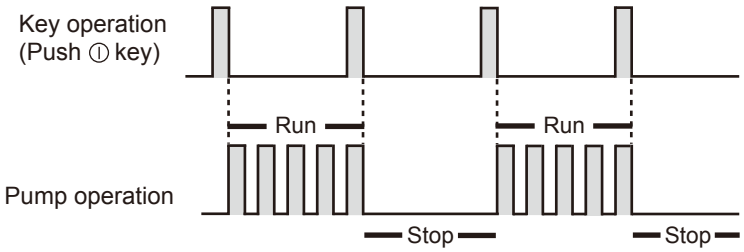

■ Digital control

Multiplier setting

The pump operation by the external signal. Set a multiplier before operation. 1-999 shots can be allocated to one external pulse. See 71 for detail.

*In the EXT operation, the pump runs at the MAN speed.

Example) When the multiplier is set to 5, the pump makes five shots per signal.

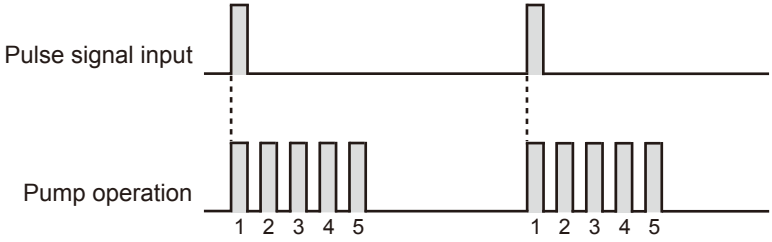

A buffer works when the pump receives an external pulse before the set shots per signal is completed. The buffer is active with the factory default settings.

*The buffer stores the external signals for up to 65535 shots.

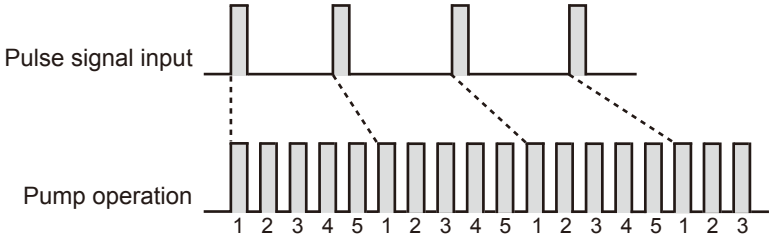

Divisor setting

The pump operation by the external signal. Set a divisor before operation.

1-9999 external pulses can be allocated to make one shot.

*The pump can not run over the MAN speed even if the divisor is set to run the pump beyond that speed.

Example) When the divisor is set to 5, the pump makes one shot every 5 signals.

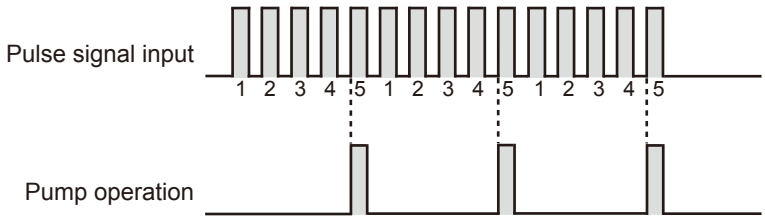

A buffer works when the pump receives the number of external pulses that will run the pump over the MAN speed. The buffer is inactive with the factory default settings.

*The buffer stores the external signals for up to 65535 shots.

■ Analogue proportional control

ANA. R (analogue rigid) setting

The pump increases/decreases a stroke rate in proportion to 0-20mA current input. Four preset patterns (4-20mA, 20-4mA, 0-20mA, 20-0mA) are provided. See page 73 for detail.

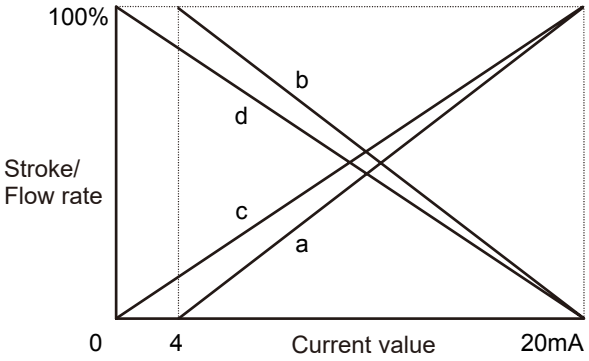

Condition:
a. 4-20mA (default setting)
b. 20-4mA
c. 0-20mA
d. 20-0mA

ANA. V (analogue variable) setting

The pump increases/decreases a stroke/flow rate in proportion to 0-20mA. Determine the operational behaviour by setting two set points and choosing one of the LINE, BOX and LIMIT patterns. See page 75 for detail.

<LINE>

A stroke/flow rate changes with a current value by a set line.

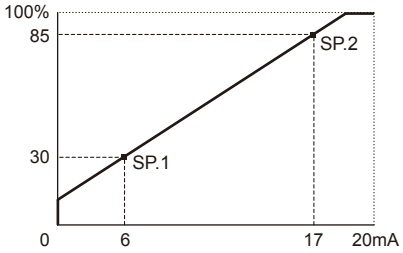

Condition:
SP1 = 6 mA, 30%
SP2 = 17 mA, 85%

<BOX>

A stroke/flow rate changes with a current value by a set line. The rate does not exceed the Set Point 2 but then fall to 0 before the Set Point 1.

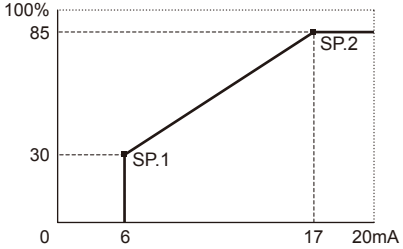

Condition:
SP1 = 6 mA, 30%
SP2 = 17 mA, 85%

<LIMIT>

A stroke/flow rate changes with a current value by a set line. The rate does not fall below the Set Point 1 or exceed the Set Point 2.

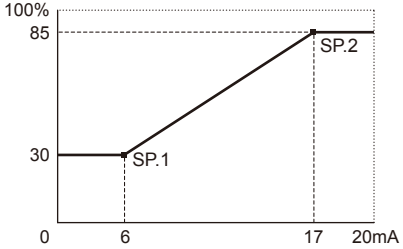

Condition:
SP1 = 6 mA, 30%
SP2 = 17 mA, 85%

■ Pulse proportional control

PLS (pulse) setting

The pump increases/decreases a stroke/flow rate in proportion to 0-500Hz (or 0-100Hz, user selectable). Determine the operational behaviour by setting two set points and choosing one of the LINE, BOX and LIMIT patterns. See page 78 as well.

<LINE>

A stroke/flow rate changes with a pulse rate by a set line.

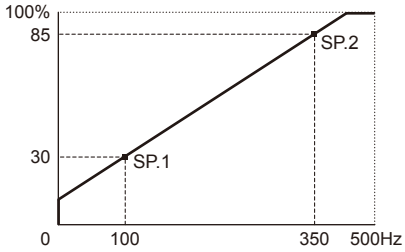

Condition:
SP1 = 100Hz, 30%
SP2 = 350Hz, 85%

<BOX>

A stroke/flow rate changes with a pulse rate by a set line. The rate does not exceed the Set Point 2 but then fall to 0 before the Set Point 1.

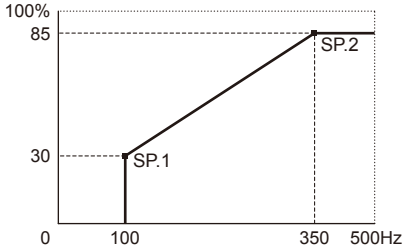

Condition:
SP1 = 100Hz, 30%
SP2 = 350Hz, 85%

<LIMIT>

A stroke/flow rate changes with a pulse rate by a set line. The rate does not fall below the Set Point 1 or exceed the Set Point 2.

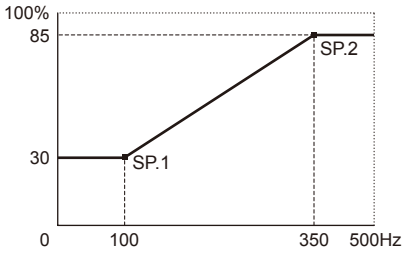

Condition:
The left graph is in the following setting.
SP1 = 100Hz, 30%
SP2 = 350Hz, 85%

PRIME mode

The pump runs at the maximum stroke rate while both the UP and DOWN keys are pressed. Use this function for degassing.

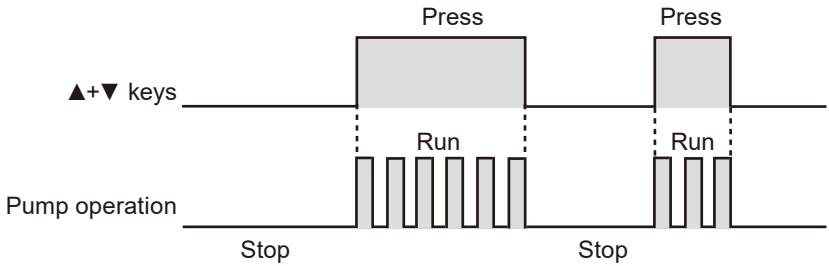

■ STOP function

The start/stop of the pump can be controlled by external devices such as a level sensor. This function is dominated by the PRIME or AUX function.

When the "CL-ON" option is selected:

The pump stops while receiving the external signal via the STOP terminal (closed circuit).

*The pump resumes operation when the STOP signal is released.

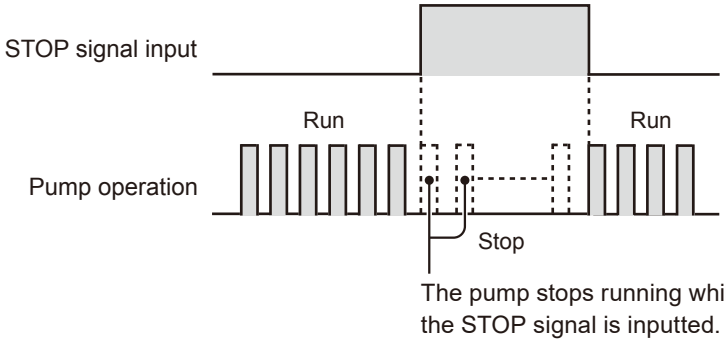

When the "CL-OF" option is selected:

The pump runs while receiving the external signal via the STOP terminal (closed circuit).

*The pump stops operation when the STOP signal is released.

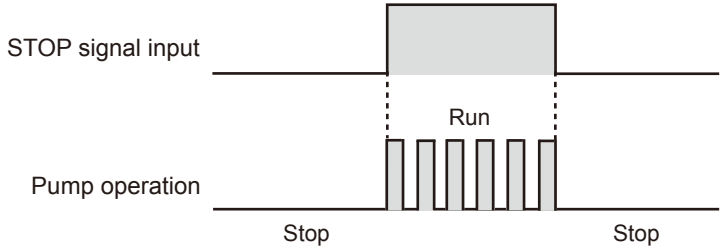

■ Pre-STOP function

When the "CL-ON" option is selected:

The STOP LED lights orange while the pump is receiving the external signal via the Pre-STOP terminal (closed circuit). Note the pump does not start or stop running.

When the "CL-OFF" option is selected:

The STOP LED stops lightening while the pump is receiving the external signal via the Pre-STOP terminal (closed circuit). Note the pump does not start or stop running.

■ **AUX function**

The pump runs at the maximum stroke rate of 360(/240/180)spm while receiving the external signal via the AUX terminal. Use this function for degassing.

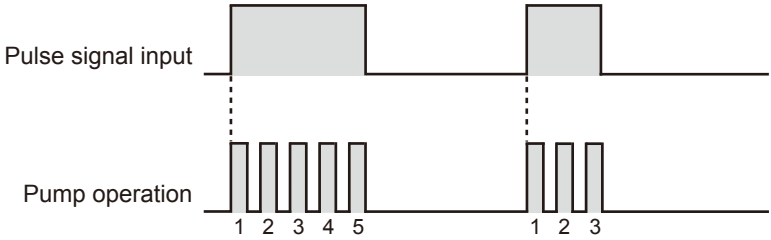

■ **Interlock function**

The start/stop of the pump can be controlled by the external signal via the input terminal. This function is dominated by the PRIME or STOP function.

Output functions

The pump has the following outputs with different functions.

■ **OUT1 (mechanical relay)**

The pump transmits the no voltage contact signal:

At STOP signal input

At Pre-STOP signal input

At Interlock signal input

At Completion of the digital control with a multiplier

At Completion of batch control (with the EFS flow sensor)

When a measured flow is out of allowable range in the ANA.V or PLS control with the EFS flow sensor (FL.ER: Out of measurement alarm):
This alarm output will be stopped when the EFS measured flow returns to the allowable range (operation sustained) or when the start/stop key is pushed once (operation suspended).

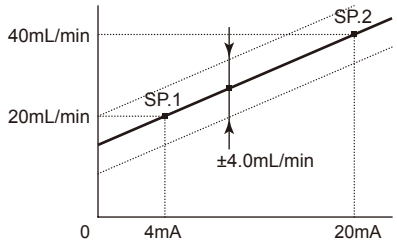

Condition:
SP1 = 20mL/min at 4mA
SP2 = 40mL/min at 20mA
Allowable range = 4.0mL/min
Delay time = 0 sec

When a flow falls below the preset minimum rate in operation with the EFS flow sensor (F.CHK: Poor flow alarm):

The error message of "FLOW" will appear on the pump display. It is cancelled when the start/stop key is pushed once (operation suspended).

*Do not set the minimum rate at or above the target flow rate.

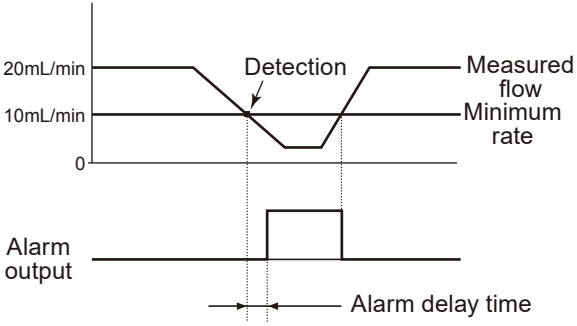

Condition:
Target rate = 20mL/min
Preset min rate = 10mL/min
Alarm delay time = 5 minute

■ OUT2 (photoMOS relay)

The pump transmits the no voltage contact signal:

In synchronous with pump shots

In synchronous with signal input from the EFS flow sensor

*The OUT1 functions can also be set to the OUT2.

■ Analogue output

The pump outputs a current value of 4-20mA in proportion to a flow/stroke rate.

Combination with the EFS flow sensor

The combination of the EFS flow sensor (purchase separately) and the EWN-B11Y/-B16Y/-B21Y/-C16Y enables feedback control. Digital control with a multiplier and a divisor is not enabled while the EFS sensor is connected.

Observe the following points.

- Use care handling the flow sensor. Do not drop or hit. An impact may affect sensor performance.
- Do not modify the flow sensor. Alterations to the flow sensor carries a high degree of risk. It is not the manufacturer's responsibility for any failure or injury resulting from alterations to the flow sensor.
- Use liquid conductivity of 1000mS/m or more.
- The use of the flow sensor in any conditions other than those clearly specified may result in failure or injury. Use this product in specified conditions only.
- Do not install/store the sensor in a flammable atmosphere.
- Do not use a corrosive solution.
- Use measures to keep the flow sensor connections free from stress. Weight and thermal expansion/contraction of the piping can stress connection points.
- Non-freezing. Do not allow liquid temperature to fall below its freezing point.
- The flow sensor does not work for 20 seconds after power-on. Avoid on-off operation by powering on/off the pump.
- Do not expose the sensor to direct sunlight or heat.
- Malfunction may result. Do not close the sensor to a strong magnet or use in a magnetic field.
- It takes about 30 minutes after the start of the pump for a dry EFS to get ready for measurement. An accurate flow can not be obtained during this time period (running-in period).
- Rinse the flow path with tap water to clean electrode as necessary.

Iwaki EFS-05-FT/-FH Electromagnetic Flow Sensor

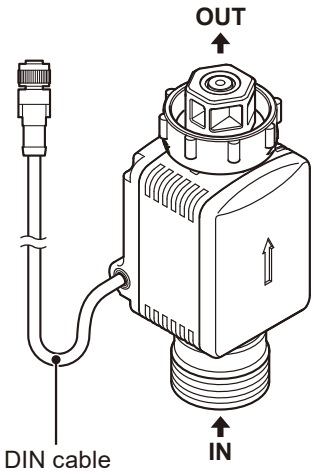

■ Feedback control (see page 95)

In the feed back control with the EFS sensor, the pump automatically controls the stroke rate to meet the target flow rate. Call up the manual mode (the pump stops) and use the DISP key to select the "GPH", "L/h" or "mL/m" flow unit. Set a target rate and then push the start/stop key. The feedback control will be started based on the actual flow measured by the EFS sensor.

*The pump controls a stroke rate in the range of 0-360(240/180)spm. The flow rate changes with a stroke rate and discharge pressure.

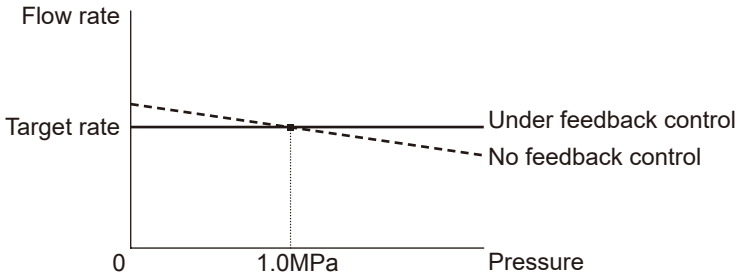

■ Batch control (see page 96)

When the EFS sensor is used with the pump, the batch control becomes available. In the batch control, the pump runs until the set volume per pulse that is monitored by the EFS is completed and stops afterwards. The batch volume shown on the pump screen is getting lower as feeding advances.

*In the batch control, the pump runs at the MAN speed.

*If the EXT key is pushed or the batch S/S signal is entered before the pump has completed feeding, the batch volume returns to the origin.

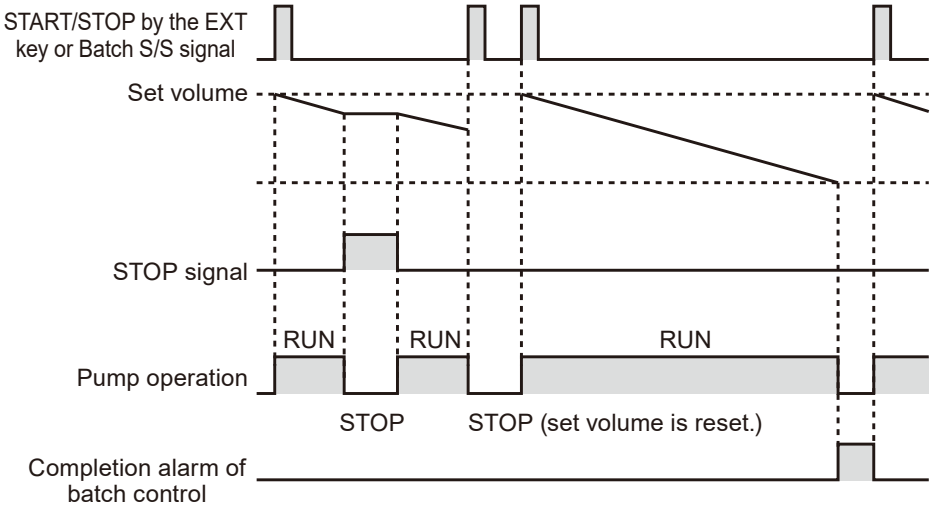

When "bF-ON (buffer ON)" is selected:

A set volume doubles in dosing if the pump receives an external pulse signal via the analogue/pulse input terminal or the INPUT terminal (see page 45 for their wiring diagrams.). Either terminal can be used, however, when using the INPUT terminal, choose the "INPUT", "INP.T" and then "PULS" options in the user mode.

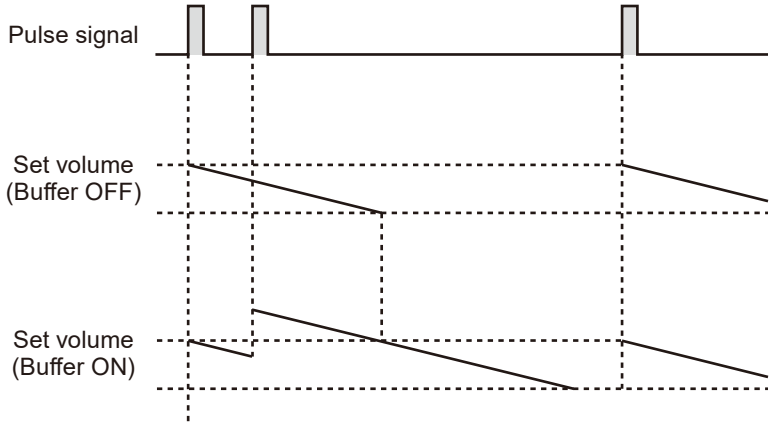

Combination with the FCP and FCM flow checker/counter

The FCP-1 VC/VE/PC/PE flow counter and the FCM-VC-1/-2 or FCM-VH-1/-2 flow checker detect each pulsation flow from the pump and feed back pulse signals to the pump. The pump recognizes upset conditions when the feedback signals does not match the number of pump shots. The following four behavioural patterns are available.

■ A. MODE

The pump stops running and outputs an alarm via the OUT1 terminal with the "FLOW" and "Err" displays on the pump screen when the pump does not receive a feedback signal from the FCP/FCM for the set number of shots. Push the start/stop key to release this error condition.

*FC.MUM: Number of dry shots user settable in the user mode

When the FC.MUM is set to 10:

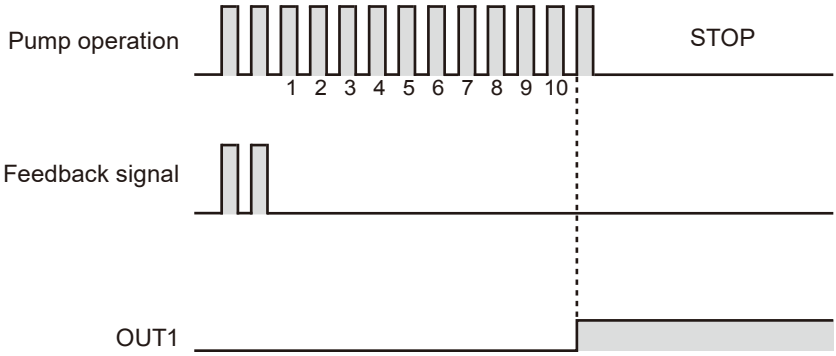

■ B. MODE

The pump outputs an alarm via the OUT1 terminal, keeping its operation, when the pump does not receive a feedback signal from the FCP/FCM for the 1st set number of shots (FC.MUM: Number of dry shots). The pump stops running with the "FLOW" and "Err" displays on the pump screen when the pump continues not receiving a further signal for the 2nd set number of shots (FC.POF: Dry shots to pump off). Push the start/stop key to release this error condition.

When the FC.MUM is set to 10 and the FC.POF to 30:

<No feedback signal recovery>

The pump stops running when not receiving a feedback signal for further 30 shots (FC.POF) after 10 dry shots (FC.MUM) has been made.

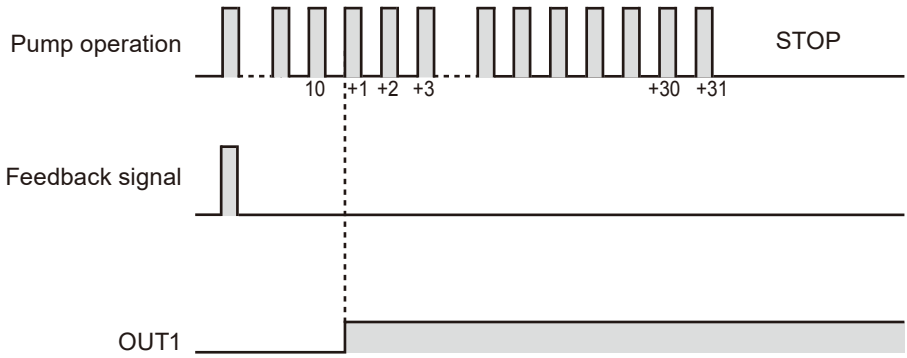

<Feedback signal recovery>

The pump keeps running when receiving a feedback signal within 30 shots (FC.POF) after 10 dry shots (FC.MUM) has been made.

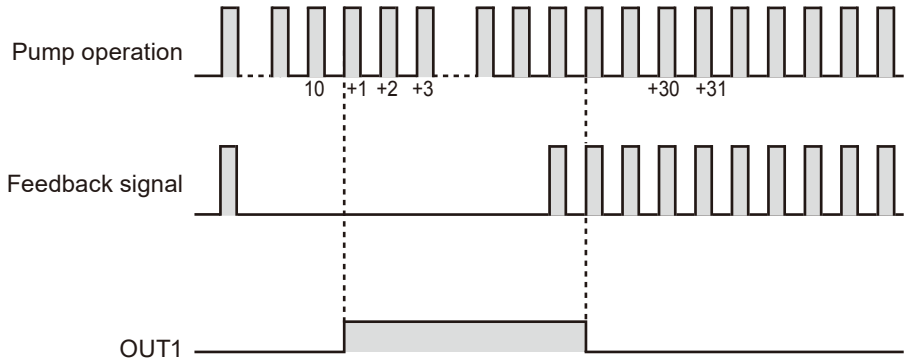

■ **C. MODE**

The pump stops running with the "FLOW" and "Err" displays on the pump screen, outputting an alarm via the OUT1 terminal when not receiving a feedback signal from the FCP/FCM for the set number of dry shots (FC.MUM: Number of dry shots) plus the set number of shots (FC.POF: Dry shots to pump off).

Push the start/stop key to release this error condition.

When the FC.MUM is set to 10 and FC.POF to 30:

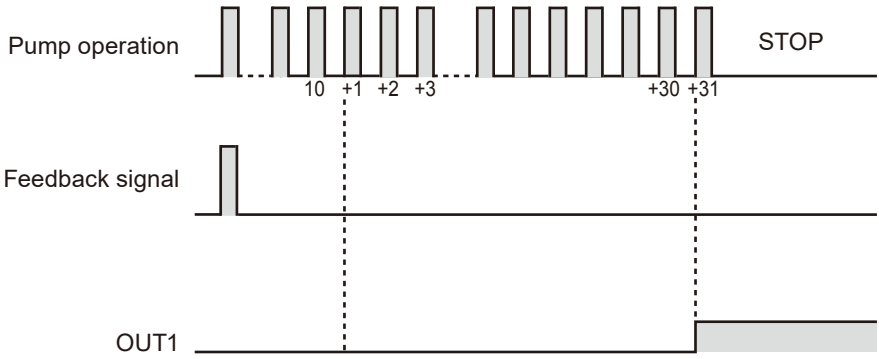

■ D. MODE

The pump continues running at a MAN speed for the 1st set time (FC.TIM: Detection time) and then a maximum speed for the 2nd set time (FC.PRM: Priming time). The pump stops running with the "FLOW" and "Err" displays on the pump screen, outputting an alarm via the OUT1 terminal when not receiving a feedback signal from the FCP/FCM over the return time (FC.RTN: Return time). The pump speed return to the MAN speed after the Priming time if it receives a signal over the return time.

When the FC.TIM is set to 2min, FC.PRM to 5min and FC.RTN to 30sec:

<No feedback signal recovery>

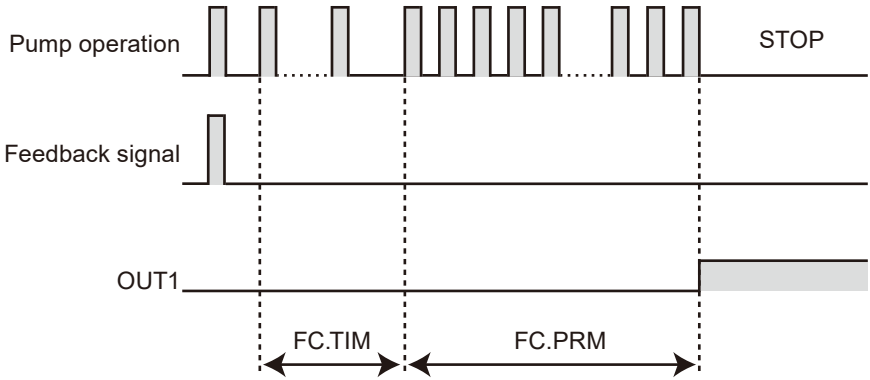

<Feedback signal recovery>

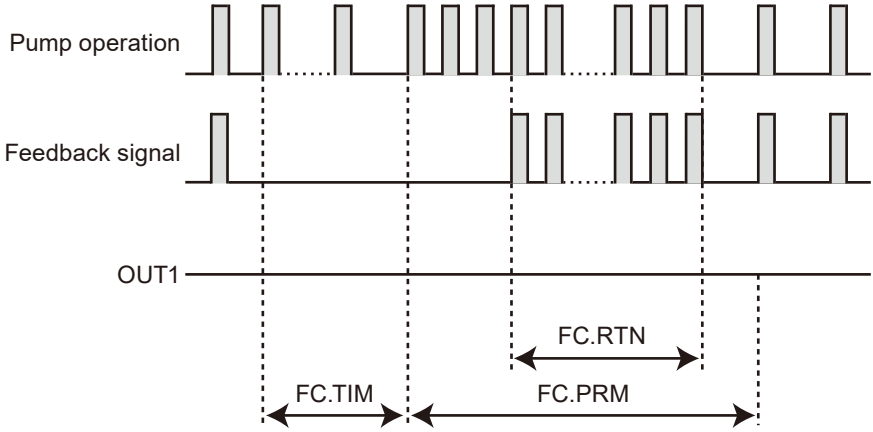

Pump

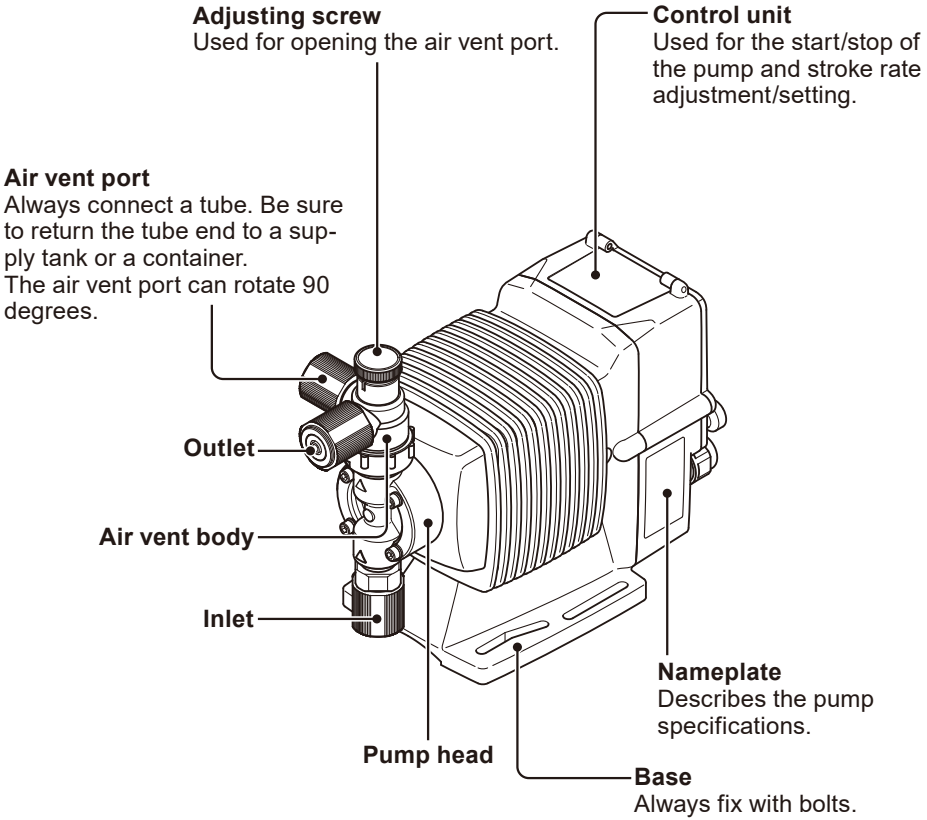
Adjusting screw
Used for opening the air vent port.
Control unit
Used for the start/stop of the pump and stroke rate adjustment/setting.
Air vent port
Always connect a tube. Be sure to return the tube end to a supply tank or a container.
The air vent port can rotate 90 degrees.
Outlet
Air vent body
Inlet
Nameplate
Describes the pump specifications.
Pump head
Base
Always fix with bolts.

START/STOP key
Used for starting/stopping operation or entering a setting.

EXT key
Used for entering the EXT mode.

Display
An operational status, a selected mode and a set value are shown here.



UP key
Used for increasing numeric values or selecting a setting mode.

DOWN key
Used for decreasing numeric values or selecting a setting mode.

DISP key
Used for changing units.

OUT LED
Lights red as the pump outputs the signal.

Stroke length knob
Determines liquid volume per shot.

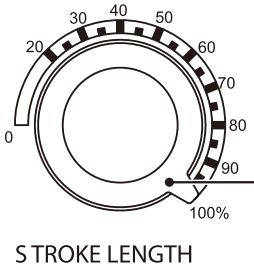

STOP LED
Lights red as the pump stops running by the STOP signal.
Lights orange as the pump keeps running while receiving the Pre-STOP signal.

ON LED
Lights orange as turning on power.
The LED lights green and flashes at each stroke.

■ Basic displays & Pump states

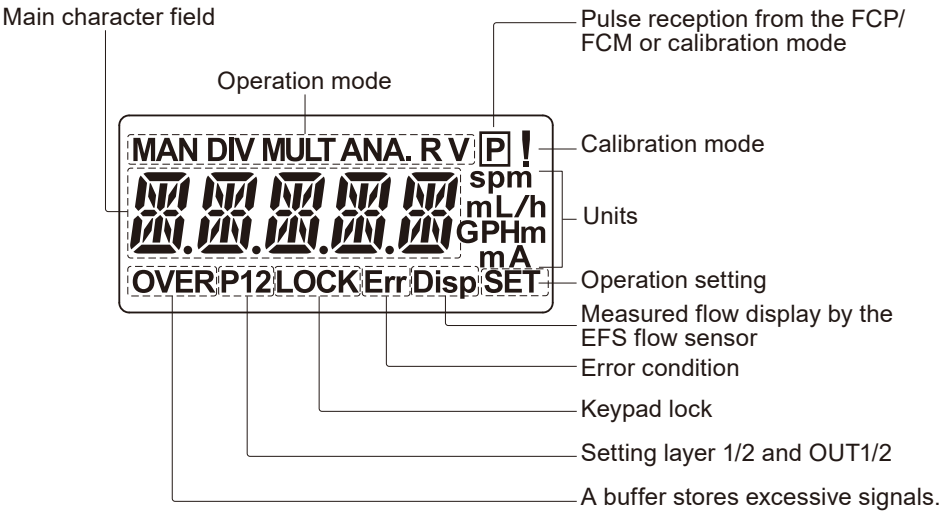

	STOP LED lights green	ON LED lights orange	ON LED blinks green	OUT LED lights red
100.0%	—	Manual wait state.	—	OUT1 & 2 activate as preset.
MAN 100.0%	—	—	The pump is running in manual mode.	OUT1 & 2 activate as preset.
MAN 37.8 mL/m	—	—	The pump is running at the displayed flow rate.	OUT1 & 2 activate as preset.
STOP	Operation stop by the STOP signal.	—	—	—
PGEXT SET	—	EXT mode setting in the user mode.	—	—
Err 1	—	The pump is in an error condition	—	—

*The backlit LCD stops lightening 1 minutes after the last key operation.

Identification codes

The model codes of the pump/drive units and the control unit represent the following information.

Pump/Drive units

EWN - B 11 VC __ E Y __ - __

a b c d e f g h i

a. Series name

EWN: Multivoltage electromagnetic metering pump

b. Drive unit (average power consumption)

B: 20W C: 24W

c. Diaphragm effective diameter

09: 8mm 11: 10mm 16: 15mm

21: 20mm 31: 30mm 36: 35mm

d. Wet end materials

Code	Pump head	Fitting	Valve	O ring	Valve seat	Gasket	Diaphragm	Pump size
VC	PVC	PVC	CE	FKM	FKM	PTFE	PTFE (bonded to EPDM)	11/16/21/31/36
VH			HC	EPDM	EPDM			11/16/21
VS			SUS316 equivalent					31/36
PC	GFRPP	GFRPP	CE	FKM	FKM			11/16/21/31/36
PH			HC	EPDM	EPDM			11/16/21
PS			SUS316 equivalent					31/36
TC	PVDF	PVDF	CE	FKM	FKM			11/16/21/31/36
FC				—	PCTFE			
SH	SUS316	SUS316	HC		SUS316			
PC-V	GFRPP	GFRPP	CE	FKM	PCTFE			C31
P6-V			SUS316 equivalent	EPDM				

Automatic air vent (Auto degassing type)

Code	Air vent valve guide A	Air vent valve guide B	Valve	Separate pin	Valve seat	O ring
VC	PVC	PVC	Zirconia ceramic	Titanium	FKM	FKM
VH			HC	HC	EPDM	EPDM

Material code

PVC : Polyvinyl chloride
PVDF : Polyvinylidene difluoride
FKM : Fluorine-contained rubber
HC : Hastelloy C276 equivalent
CE : Alumina ceramic
GFRPP : Glassfiber-reinforced polypropylene
EPDM : Ethylene-propylene rubber
PTFE : Polytetrafluoroethylene
SUS316 : Austenitic stainless steel
PCTFE : Polychlorotrifluoroethylene

e. Tube size

No.	Tube ID×OD	Wet end materials	Pump size
No code*1	ø4×ø6*2	VC/VH/PC/PH/TC/VC-C/VH-C/ VC-A/VH-A	EWN-09/-11/-16 & -21
	ø6×ø8*2	VC/VH/PC/PH/TC/VC-C/VH-C/ VC-A/VH-A	EWN-09/-11/-16 & -21
	ø9×ø12	VC/VS/PC/PS	EWN-31 & -36
	ø10×ø12	TC	EWN-31 & -36
	ø6×ø12	VC-C	EWN-09/-11/-16 & -21
	Rc 1/4	FC/SH/SH-H	EWN-11/-16/-21/-31 & -36
	IN: ø15×ø22 OUT: ø9×ø12	PC-V/P6-V	EWN-31
	IN/AIR: ø4×ø6*2 OUT: R1/4	PC-H/PH-H	EWN-11 & -16
	IN/AIR: ø6×ø8*2 OUT: R1/4	PC-H/PH-H	EWN-11 & -16
1	ø4×ø9	VC/VH/PC/PH/VC-C/VH-C/ VC-A/VH-A	EWN-09/-11/-16 & -21
2	ø4×ø6	VC/VH/PC/PH/VC-C/VH-C/ VC-A/VH-A	EWN-09/-11/-16 & -21
3	ø6×ø8	VC/VH/PC/PH/TC/VC-C/VH-C/ VC-A/VH-A	EWN-09/-11/-16 & -21
4	ø8×ø13	VC/VS/PC/PS	EWN-31 & -36
6	ø10×ø12	VC/VS/PC/PS	EWN-31 & -36
7	ø1/4"×ø3/8"	VC/VH/PC/PH/TC/VC-C/VH-C/ VC-A/VH-A	EWN-09/-11/-16 & -21
8	ø3/8"×ø1/2"	VC/VS/PC/PS/TC	EWN-31 & -36
9	Rc1/4	VC/VH/PC/PH/TC/VC-C/VH-C	EWN-09/-11/-16 & -21
9	Rc1/4	VC/VS/PC/PS/TC	EWN-31 & 36
23	ø6×ø12	VC/VC-C	EWN-11/-16/-21/-31 & -36
24	ø5×ø8	VC/TC/VC-C	EWN-09/-11/-16 & -21
1/27	IN: ø4×ø9 OUT: R1/4	PC-H/PH-H	EWN-11 & -16
2/27	IN: ø4×ø6 OUT: R1/4	PC-H/PH-H	EWN-11 & -16
3/27	IN: ø6×ø8 OUT: R1/4	PC-H/PH-H	EWN-11 & -16
7/27	IN: ø1/4"×ø3/8" OUT: R1/4	PC-H/PH-H	EWN-11 & -16

*1 The VC-C type pumps with ø4×ø6 tube size (no tube size code) is equipped with a ø6×ø12 hose adapter and a hose stopper.

*2 Pumps with a ø4×ø6 tube size (no tube size code) for the European market
Pumps with a ø6×ø8 tube size (no tube size code) for the Australian market.

f. Power cable

E: European type A: Australian type

g. Control unit function

Y: High functional

h. Special version

C: High compression type H: High pressure type

V: High viscosity type A: Auto degassing type

i. Special configuration

Installation

This section describes the installation of the pump, tubing and wiring. Read through this section before work.

Observe the following points when installing the pump.

- Risk of electrical shock. Be sure to turn off power to stop the pump and related devices before service is performed.
- If you notice any abnormal or dangerous conditions, suspend operation immediately and inspect/solve problems. Install a pump in such a way that the plug can easily be removed under those conditions.
- Do not place explosive or flammable material near the pump.
- Do not use a damaged pump. Use of a damaged pump could lead to an electric shock or death.
- If the EFS flow sensor is needed, first mount the sensor before plumbing the pump. Use supports to hold plumbing and the pump as necessary.

Pump mounting

Select an installation location and mount the pump.

Necessary tools

- Four M5 bolts (pump mounting)
- Adjustable wrench or spanner

1 **Select a suitable place.**

Always select a flat floor free of vibration. See page 11 for detail.
Flooded suction is recommended when handling a gaseous liquid such as sodium hypochlorite.

2 **Anchor the pump with the M5 bolts.**

Be sure to fix the pump at four points.

NOTE

Select a level location. If the pump is not installed level, output may be affected.

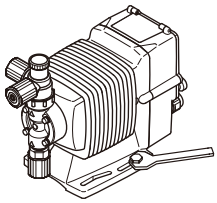

Plumbing

Connect tubes to the pump and install a check valve.

Before operation

• Cut the tube ends flat.

Tube end (side view)

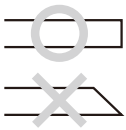

Necessary tools

• An adjustable wrench or a spanner

Tube connection

a. Pass a tube into the fitting nut and stopper and then slide it down to the adapter as far as it will go.
b. Put the tube end (adapter) in the fitting. Then hand tighten the fitting nut.
c. Retighten the fitting nut by turning it further 180 degrees with an adjustable wrench or spanner (crush tube mount).

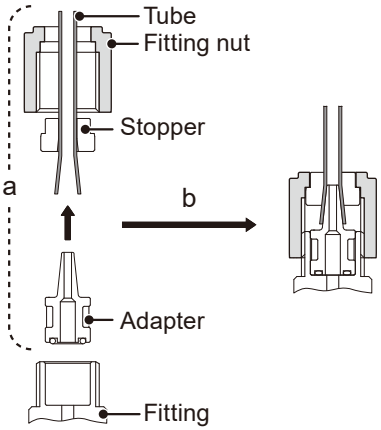

*Do not use excessive force to the plastic fitting nut.
*In your try to remove the connection, the adapter may be stuck in the crushed tube and the stopper. Try not to damage the taper of the adapter that is crushing the tube against the stopper. If it has been damaged, contact us for the new adapter/stopper.
*Do not reuse the same tube end for the crush sealing. Cut it off for ensuring the new seal is established.

1 **Connect tubes into the inlet and outlet.**

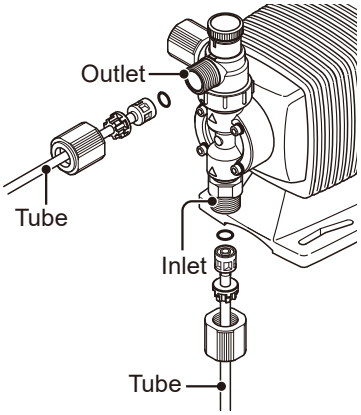

2 **Connect an air bleed tube into the air vent port.**

Route back the other tube end to a supply tank or a container.

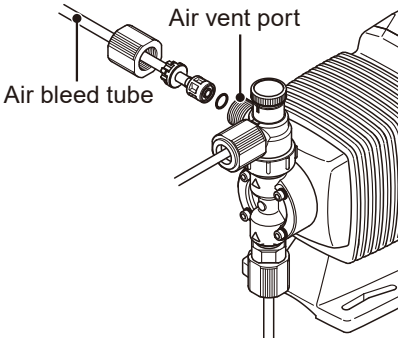

3 **Determine an air vent port direction.**

The air vent port can rotate 90 degrees.

a. Turn the lock nut anticlockwise.

b. Adjust the direction of the air vent port.

c. Hand-tighten the lock nut, holding the air vent body A.

d. Turn the lock nut 90 degrees clockwise further with an adjustable wrench or spanner.

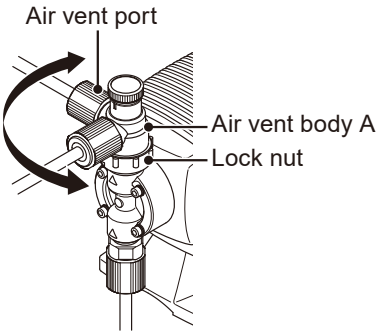

Check valve mounting

Install an optional check valve to the EWN for the prevention of a back flow, siphon and overfeeding. In the following cases be sure to install the check valve.

• A suction side liquid level is higher than a discharge side or an injection point at atmospheric pressure.

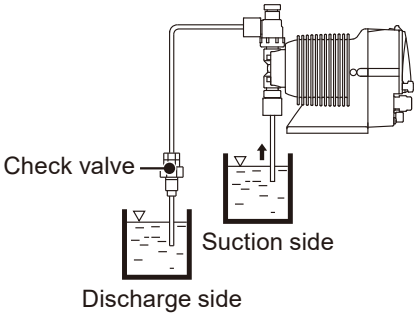

• A discharge side liquid level is higher than a suction side but the distance is 5m or below.

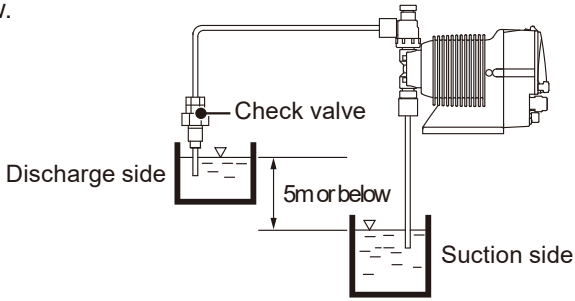

• A suction line pressure is higher than a discharge line pressure.

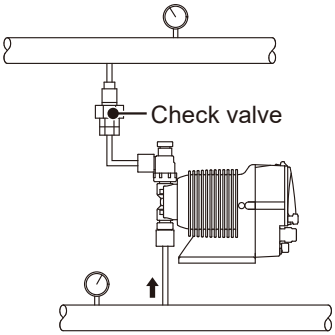

• A discharge pressure (including pipe resistance and discharge head) is below 0.13MPa. (below 0.049MPa for B31 and C36).

1 Mount a check valve at the discharge tube end.

*The CAN check valve has R1/2 and R3/8 thread connections as well as an O.D. 9 mm tube connection. Cut off an unused part and adjust the connection length as necessary.

CAN check valve

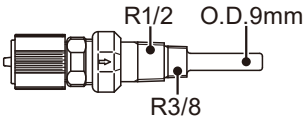

*The CBN check valve (both ends tube connections) is optionally available. Contact us or your nearest distributor.

CBN check valve

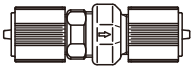

NOTE

- Periodically clean or replace a check valve with new one for the prevention of crystal clogging, especially when using sodium hypochlorite.
- In the nature of the pump, the lower discharge pressure, the higher discharge capacity (and vice versa). If you want to observe the max discharge capacity at any low level of system (/discharge) pressure, use the check/back pressure valve to give the additional pressure of 0.17MPa±0.04 to the discharge line or reduce the pump speed/stroke length.

Tubing layout

Flooded suction application

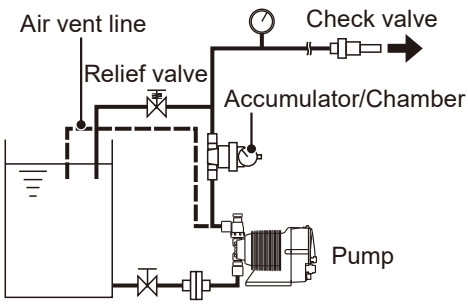

Suction lift application

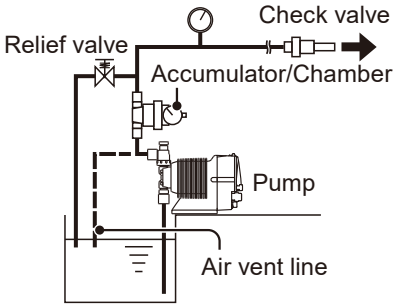

NOTE

- Flooded suction installation is strongly recommended when handling liquids that generate gas bubbles (sodium hypochlorite or hydrazine solution).
- Install a relief valve on a discharge line near the pump so as to release the discharge pressure when it exceeds the maximum level.

Wiring (pump)

Wiring for a power voltage and an external signal.

Observe the following points during wiring work.

- Electrical work should be performed by a qualified electrician. Always observe applicable codes or regulations.
- Observe the rated voltage range, or the electrical circuit in the control unit may fail.
- Risk of electrical shock. Be sure to turn off power to stop the pump and related devices before service is performed.
- Replacement of the power cable should be conducted by a manufacturer, his agency or a skilled person. Otherwise, an accident may result.

Necessary tools

- Adjustable wrench or spanner
- Phillips screw driver
- Precision screw driver
- Flathead screw driver

End terminals

See the following diagram for detail.

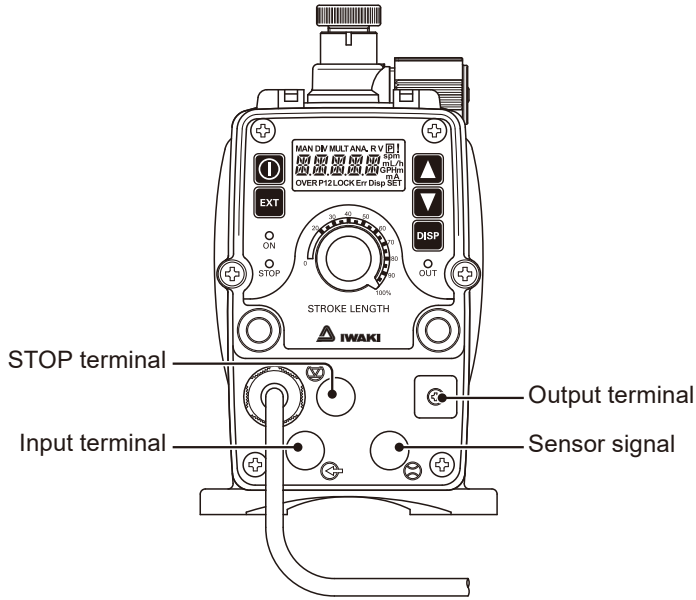

Power voltage/Earthing

Points to be checked

• Check that the main power is turned off.

1 **Connect the power cable to the 100-240VAC power source.**

This product have two power wires and one earth wire, and is classified as class I.

*Make sure the earth plug is seated securely as well.

NOTE

- Do not share a power source with a high power device which may generate surge voltage. Otherwise an electronic circuit may fail. The noise caused by an inverter also affects the circuit.
- Energize the pump with a power voltage via a mechanical relay or switch. Do not fluctuate the voltage, or CPU may malfunction. See page 45 for the precautions for ON-OFF control by a mechanical relay.

Apply power sharply

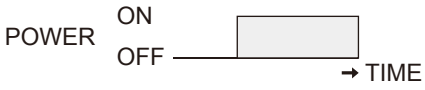

Do not apply gradually



Surge voltage

The electronic circuit in the control unit may fail due to surge voltage. Do not place the pump close to a high power device of 200V or more which may generate large surge voltage. Otherwise, take any of the following measures.

- Install a surge absorption element (ex. a varistor with capacity of 2000A or more) via power cable.

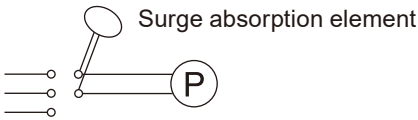

Recommended varistor
Panasonic ERZV14D431
See manufacturer's catalogues for detail.

- Install a noise cut transformer via power cable.

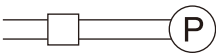

Noise cut transformer

Precautions for ON-OFF control by a mechanical relay

The pump is equipped with a CPU. To ensure the CPU to work properly, always start/stop the pump by the STOP signal for ON-OFF control. Try not to turn on and off the main power. Otherwise, observe the following points:

- Ensure the minimum OFF time of 10 minutes.
- The contact capacity of a mechanical relay should be 5A or more. Or a contact point may break.
- If the contact capacity of a mechanical relay is 5A, the maximum allowable number of times the power is turned ON/OFF is limited to 150,000. Use the contact capacity of 10A or more when the actual number of times is over 150,000 or when sharing a power source with a large capacity equipment which may cause a surge voltage and damage a contact point.
- Use a solid state relay (SSR) as necessary (such as the OMRON G3F). See manufacturer's catalogues for detail.
- The EFS does not work for 20 seconds after power-on. Do not cycle the pump power for ensuring proper EFS operation.

Signal wire connection

Use the DIN 4- or 5-pin female connector cable. We recommend the use of Binder connector cables (German manufacturer). Contact us for detail.

Binder connector cables

5-pin : 713 series 99-0436-10-05	*Input signal*
4-pin : 715 series 99-0430-15-04	*STOP signal*
5-pin : 715 series 99-0436-15-05	*Sensor signal*

Hirschmann square connector cables

4-pin : GDS307	*Output signal*

Points to be checked

- Check that the main power is turned off.

NOTE

- Do not lay on these signal cables in parallel with a power cable. Otherwise the electromagnetic induction noise is generated and malfunction or failure may result.
- The following products are the recommended SSRs (Solid State Relays) for signal input. Any other SSRs may cause malfunction. See manufacturer's information for details on these SSRs.
  –OMRON G3FD-102S or G3FD-102SN
  –OMRON G3TA-IDZR02S-US or G3TA-IDZR02SM-US
- When using a mechanical relay for signal input, its minimum application load should be 1mA or below.
- Insert the DIN connector as far as it will go and then rotate the outer ring to fix it.
- Use either a no-voltage contact or an open collector for the STOP and Input signals.
- Connect the signal cables to external devices which are protected by double or reinforced insulation.

■ STOP signal

Connect signal wires to the STOP terminal via a DIN 4-pin connector.

- *When using an open collector:*
  Pay attention to polarity. Pre-STOP and STOP are plus(+), and COM is minus(-).
- *When using a contact:*
  The contact must be designed for an electronic circuit. The minimum application load should be 1mA or less.

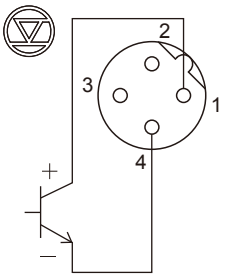

Wiring for
STOP function

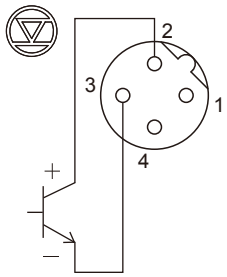

Wiring for
Pre-STOP function

1 : STOP
2 : Pre-STOP
3 : COM
4 : COM

■ Input signal

Connect signal wires to the input terminal via a DIN 5-pin connector for digital/ analogue-proportional control, interlock/AUX input or analogue signal output.

• *When using an open collector:*

Pay attention to polarity. PIN 1 and PIN 3 are plus(+), and PIN 4 is minus(-).

• *When using a contact:*

The contact should be designed for an electronic circuit. The minimum application load should be 1mA or less.

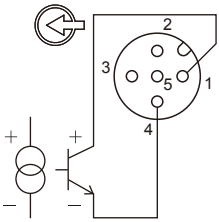

Wiring for Analogue/Pulse input

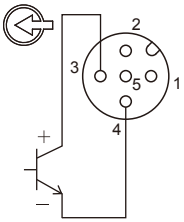

Wiring for INPUT

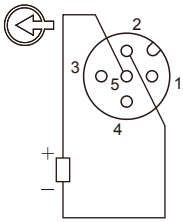

Wiring for Analogue out

1 : Analogue/Pulse input
2 : Analogue out (-)
3 : Pulse, Interlock, AUX, Batch Start/Stop input
4 : COM
5 : Analogue out (+)

NOTE

If electric terminals of an external electrical component share a common (ground) line, the analogue out minus pin 2 and the common pin 4 of the input terminal cannot be used at the same time unless a measure is taken.
When using the Analogue/Pulse input function or the INPUT function which uses the pin 4 together with the Analogue out function which uses the pin 2, an isolator must be installed in either signal line of those functions.

■ Output signal

Connect signal wires to the OUT terminal via a DIN 4-pin connector.

• *OUT1<Mechanical relay>: Alarm output*

*The "1.STOP(STOP alarm)" is enabled with the factory default settings.

• *OUT2<PhotoMOS relay>: Alarm output or Synchronous output (sensor/pump).*

*The "OFF" is selected to the OUT 2 terminal with the factory default settings.

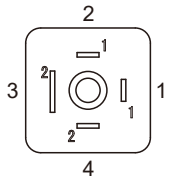

1 : OUT1
2 : OUT1
3 : OUT2*
4 : OUT2
*Pin #3 to the "PE" terminal of the output signal cable

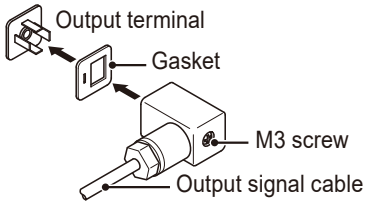

EFS flow sensor mounting (purchase separately)

Observe the following points

- Mount the EFS flow sensor before anchoring/plumbing the pump.
- Be sure to power off the pump before connecting the DIN cable.
- Use care handling the EFS flow sensor. Do not drop or hit. An impact may affect performance.

Necessary tools

- Adjustable wrench or spanner

1 **Turn the lock nut anticlockwise by an adjustable wrench and remove the air vent body A.**

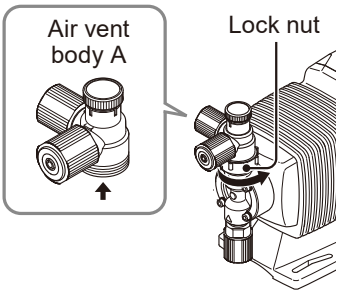

2 **Mount the EFS flow sensor.**

a. Hand-tighten the lock nut, holding the flow sensor.

b. Turn the lock nut 90 degrees clockwise further with an adjustable wrench or spanner.

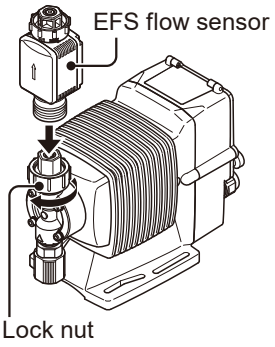

NOTE

- Foreign matters and a nonconductive liquid prevent the EFS from monitoring a flow rate. Be sure to remove these factors before mounting the EFS.
- Fasten the EFS onto the outlet of the pump head to 3.43N•m. Excessive tightening torque may break a connection. Clean a sealing surface and replace an O ring as necessary.

3 **Mount the air vent body A.**

a. Hand-tighten the lock nut, holding the air vent body A.

b. Turn the lock nut 90 degrees clockwise further with an adjustable wrench or spanner.

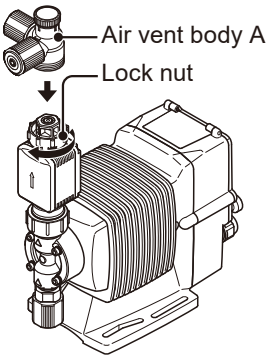

4 Connect the sensor cable to the sensor signal terminal.

NOTE

- Connect the sensor cable to the pump after mounting the EFS flow sensor, Or the cable may be damaged.
- Do not pull the sensor cable.
- Do not disassemble or alter the DIN 5-pin connector, or the EFS flow sensor may break.
- Insert the DIN 5-pin connector as far as it will go and then rotate the outer ring to fix it.
- Do not connect the sensor cable to the pump while wet with solution or water.
- Turn on the pump with the EFS flow sensor and check if "EFS.." shows up on the screen for 20 seconds. If not turn off power once and reconnect the flow sensor.

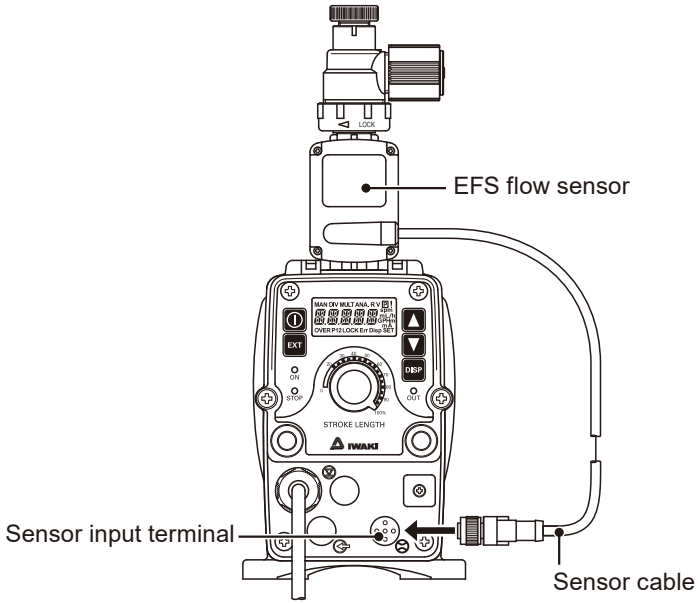

FCP/FCM mounting (purchase separately)

See each instruction manual of the FCP flow counter and FCM flow checker for detail.

■ **Flow counter (FCP)**

1 **Remove the adjusting screw and install the FCP flow counter instead.**

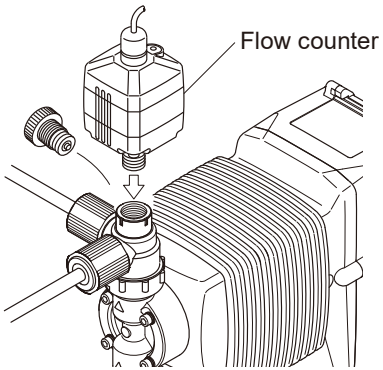

■ **Flow checker (FCM)**

1 **Remove the fitting and take out the valve set from the pump head.**

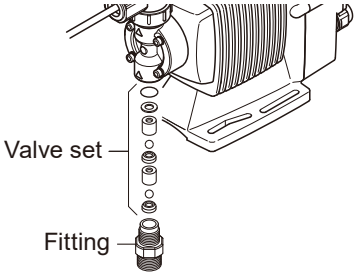

2 **Place the valve set into the air vent body B and tighten it into the pump head to 3.5N•m through the Lock nut.**

NOTE

Note the air vent valve set has a mounting direction.

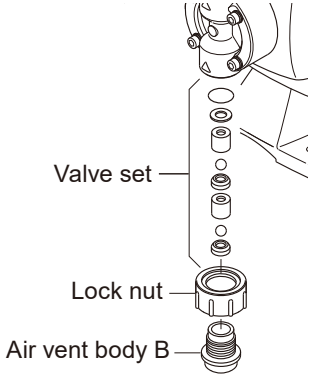

3 **Connect the flow checker body and the pump head with the Lock nut. Turn the Lock nut anticlockwise to tighten them. Take care not to drop the Plate, O ring or Float. Note that the Float has a mounting direction. Install the float into the body with a red-marked face upwards.**

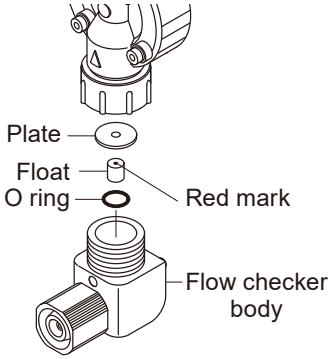

■ FCP/FCM wiring

1 **Connect the lead wire of the FCP/FCM to the DIN 5-pin connector as shown below.**

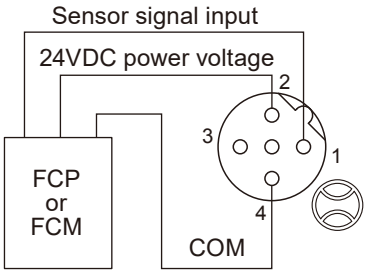

1 : Sensor signal input
2 : 24VDC power voltage
3 : Free
4 : COM
5 : Free

2 **Fit the connector to the sensor signal terminal.**

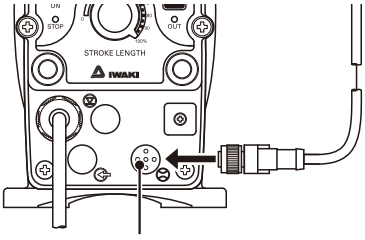

Operation

This section describes pump operation and setting.
Run the pump after pipework and wiring is completed.

Before operation

Check a flow rate, tubing and wiring. And then perform degassing and flow rate adjustment before starting operation.

Points to be checked

Before operation, check if:

- Liquid level in a supply tank is enough.
- Tubing is securely connected and is free from leakage and clogging.
- Discharge/suction valves are opened.
- A power voltage is in the allowable range.
- Electrical wiring is correct and is free from the risk of short circuit and electrical leakage.

Retightening of pump head fixing bolts

Important

The pump head fixing bolts may loosen when plastic parts creep due to temperature change in storage or in transit, and this can lead to leakage. Be sure to retighten the bolts evenly to the specified tightening torque below in diagonal order before starting operation.

Tightening torque

Model code	Torque	Bolts
EWN-B09/-B11/-B16/-B21	2.16 N•m	M4 Hex. socket head bolt
EWN-B31	2.55 N•m	M4 Hex. socket head bolt
EWN-C16/-C21	2.16 N•m	M4 Hex. socket head bolt
EWN-C31	2.55 N•m	M4 Hex. socket head bolt
EWN-C36	2.55 N•m	M5 Hex. socket head bolt

*Tighten fixing bolts once every three months.

■ **Use of hexagon wrench instead of a torque wrench**

Fasten the fixing bolts as tight as can be by the hand with the straight long part of a hexagon wrench (a) and further turn the bolts clockwise 90 degrees with the short part (b).

a

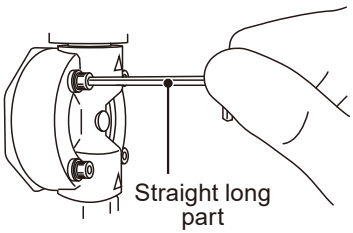

b

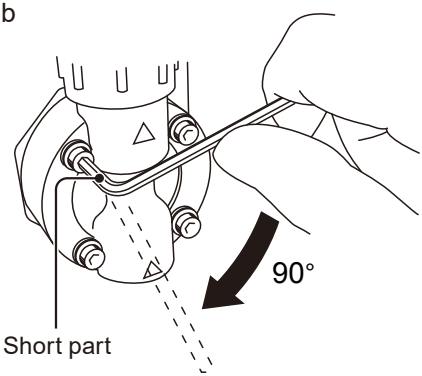

Stroke rate adjustment

A stroke rate increases/decreases as pushing the UP/DOWN keys. Press and hold either key for three seconds for quick change. Quick change stops at the top or bottom rate. The top(/bottom) rate skips to the bottom(/top) when the key is released and pushed once.

Degassing

The gas needs to be expelled from the pump and tubing by degassing. Normal performance can not be obtained with gas in the pump. Conduct degassing in the following cases.

- When the pump starts to run for the first time
- When a flow rate is too low
- After liquid is replaced in a supply tank
- After a long period of stoppage
- After maintenance and inspection

NOTE

- Both gas and chemical come out together through an air bleed tube. Place the end of the tube in a supply tank or a container.
- Some chemicals may cause skin trouble or damage component parts. When your hand or component parts get wet with chemical liquid, wipe off immediately.

Points to be checked

- An air bleed tube is connected to the pump.

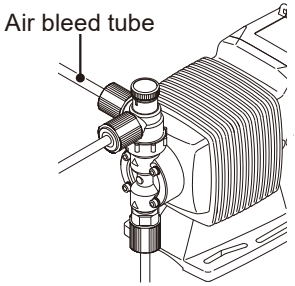

■ EWN VC/VH/VS/PC/PH/PS/TC/PP/SH

1 **Turn on power.**

The ON LED lights and a display related to the current mode appears on the screen.

*The pump waits in the MAN mode when the power is turned ON with a default setting or calls up the last selected mode with other settings.

*A push of any keypad lightens the backlit LCD. The LCD stops lightening 1 minutes after the last key operation.



2 Run the pump at the maximum stroke rate.

Select a convenient way from the following.

• Set a stroke rate to the top and push the start/stop key.

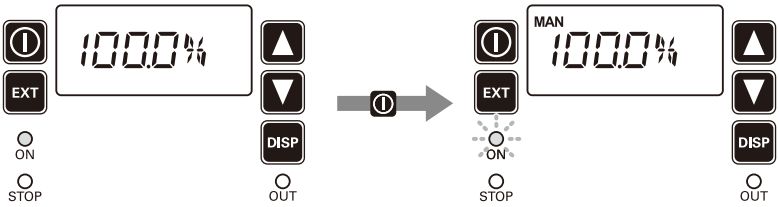

*Push the start/stop key to return to the MAN mode from the EXT mode as necessary.

*A flow rate accompanied with "GPH", "L/h" or "mL/m" unit is a target flow rate of the feedback control with the EFS flow sensor. Change those units to "%" or "spm" before the MAN operation.

• Enter the external signal via the AUX terminals. See page 22.

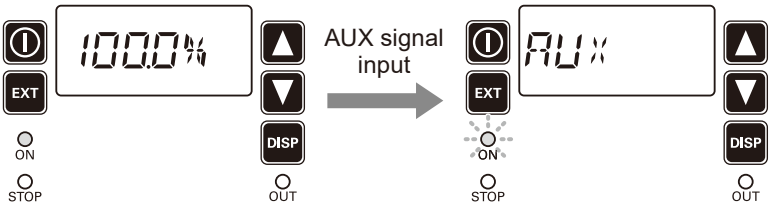

• Press and hold both the UP and DOWN keys.

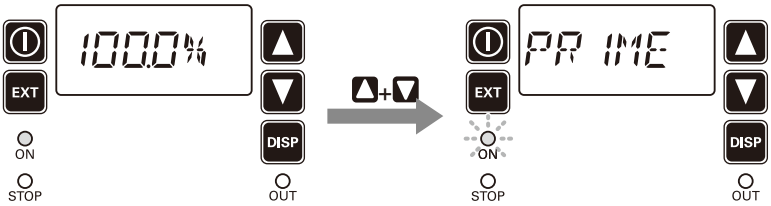

3 Rotate the adjusting screw two revolutions anticlockwise to open the air vent port.

*Do not rotate it three revolutions. Otherwise, the adjusting screw may come off with solution spray.

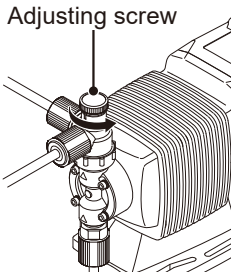

4 **Keep the pump running for more than ten minutes for degassing.**

5 **Stop the pump by:**
- pushing the start/stop key once or
- stopping the AUX signal or
- releasing the UP and DOWN keys

6 **Rotate the adjusting screw clockwise to close the air vent port.**

7 **Check liquid is delivered to the discharge line.**
*Degassing is required again if the pump does not discharge liquid.

8 **Check connections for leakage.**
Degassing has now been completed.

■ EWN FC/PC-V/P6-V

Install an air vent valve on a discharge line for degassing. Follow the procedure below to conduct degassing if the air vent valve is not available.

1 **Connect a discharge tube and route back the other tube end to a supply tank or a container.**
*Remove the check valve from the discharge tube if it is installed.
*After liquid replacement in a supply tank or a long period of stoppage, an internal pressure may remain in the pump or tubing. Removing the check valve at this state, liquid may gush out. Wrap a waste cloth around the check valve connection for the prevention of gushing.

2 **Turn on power.**
The ON LED lights and a display related to the current mode appears on the screen.

3 **Run the pump at the maximum stroke rate.**

Select a convenient way from the following.

- Set a stroke rate to the top and push the start/stop key.
- Enter the external signal via the AUX terminals.
- Press and hold both the UP and DOWN keys.

4 **Keep the pump running for more than ten minutes for degassing.**

5 **Stop the pump by:**

- pushing the start/stop key once or
- stopping the AUX signal or
- releasing the UP and DOWN keys

6 **Check liquid is delivered to the discharge line.**

*Degassing is required again if the pump does not discharge liquid.

7 **Check connections for leakage.**

Degassing has now been completed.

Flow rate adjustment

A flow rate can be adjusted by adjusting a stroke rate and stroke length.

The stroke rate is indicated in spm or %. 100% stroke rate means the maximum spm. Stroke rate adjustment is a main way to adjust a flow rate.

Stroke length is the moving distance of the plunger.
A liquid volume per shot can be controlled by changing stroke length. The widest moving distance is defined as 100% stroke length.

First adjust a flow rate by stroke rate adjustment. Use stroke length adjustment for the range where stroke rate adjustment can not reach.
Determine a suitable stroke rate and a stroke length, taking account of operating conditions and liquid characteristics.

The following procedure is recommended.

1 **Change a stroke rate with stroke length 100% to adjust a flow rate.**
See the "Stroke rate adjustment" section (page 61) and the "Stroke length adjustment" section (page 62) for detail.

2 **Measure a flow rate.**

3 **If a flow rate is lower than a specified level, increase a stroke rate and measure the flow again.**

4 **Change a stroke length for fine adjustment.**

5 **Measure the flow again to see the specified level is obtained.**

Flow rate, stroke rate and stroke length

B type

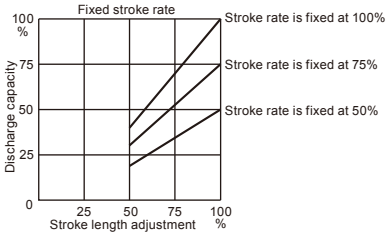

C type

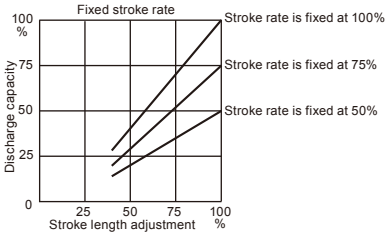

Precautions of flow rate adjustment

- **When back pressure is high**
  Set stroke length to 100% and adjust a flow by changing a stroke rate.
- **When a flow rate per shot greatly influences the reaction in neutralization or titration application**
  Shorten a stroke length to reduce a flow rate per shot. And then adjust a flow by changing a stroke rate.
- **When pumping gaseous liquid such as sodium hypochlorite (NaClO) and hydrazine solution ($N_2H_2O_2$)**
  Set a stroke length to 100% and adjust a flow by changing stroke rate.
  Note air lock may occur when stroke length is set too short.

■ Stroke rate adjustment

A stroke rate can be set by keypad operation from 0.1 to 100%. The relation between a flow rate* and a stroke rate is shown as below.

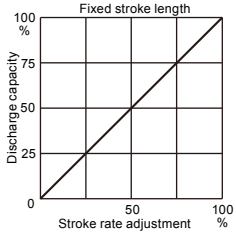

*The flow rate described on the nameplate is at 100%.

1 **Turn on power and call up manual mode.**

Enter manual mode to indicate a stroke rate on the screen.

- Push the start/stop key when the pump is in the EXT mode.
- When the "STOP" or "-STOP" display appears on the screen, see page 88 and 89 to release the condition.

2 **Use the UP or DOWN key to adjust a stroke rate.**

3 **Push the start/stop key.**

The ON LED blinks at each shot during operation.

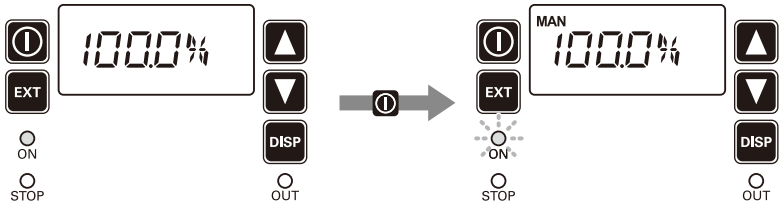

Operation

■ Stroke length adjustment

A stroke length can be adjusted when the moving distance of the plunger is changed by the stroke length knob.

The stroke length adjustment range is 50-100% for the B type, 40-100% for C type. The relation between a flow rate* and a stroke length is shown right.

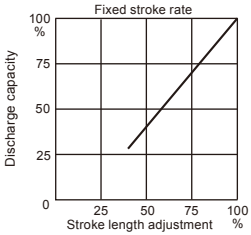

NOTE

Do not rotate the stroke length knob when the pump is not running.

1 **Turn on power and push the start/stop key to run the pump.**

The ON LED blinks during operation.

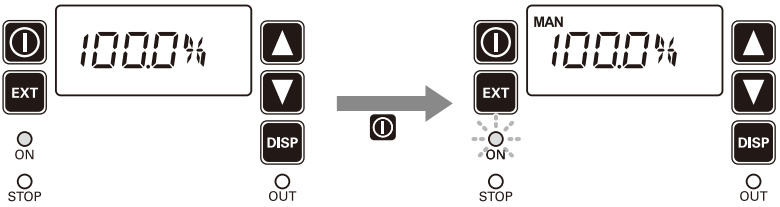

2 **Rotate the stroke length knob to determine liquid volume per shot.**

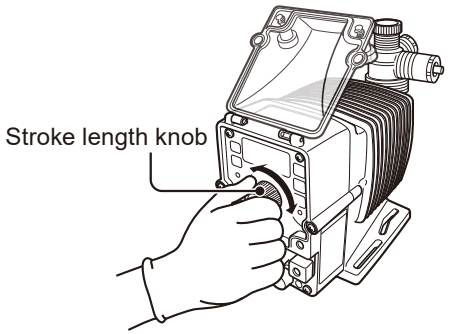

■ **Flow calibration**

Entering liquid volume per shot, operation can be monitored in GPH, L/h or mL/m.

1 **Press and hold the DISP key for 3 seconds to move from the wait state to the calibration mode.**

The screen shows "TEST".

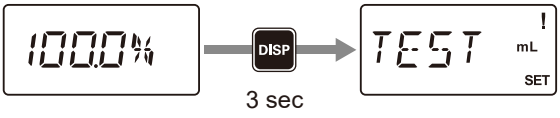

2 **Run the pump.**

Use a calibration cylinder to collect liquid. The pump runs for 10 seconds.



3 **Enter the collected liquid volume.**

Use the UP and DOWN keys to adjust a value and the DISP key shift to the next digit. Push the start/stop key to enter the value.

*Pushing the EXT key, the setting is cancelled.

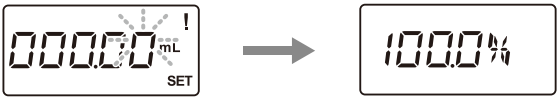

Operation

Before a long period of stoppage (one month or more)

Clean wet ends and the inside of tubing.

• Run the pump with clean water for about 30 minutes to rinse chemicals off.

Before unplugging the pump

• Always stop the pump by key operation and wait for three seconds before unplugging the pump. Otherwise, the last key operation may not be put in memory. In this case the pump unintentionally starts to run as powered on, discharging liquid.

When the pump does not transfer liquid at resuming operation.

• Clean the valve sets and remove foreign matters.

• If gas is in the pump head, expel gas and readjust a flow rate. See the "De-gassing" section on page 55.

Operation at each mode is individually set and controlled by keypad operation.

Select a proper mode to make optimal operation.

Default setting and setting range

Parameters				Setting ranges	STEP[*1]	Default
Flow unit selection				%, spm, GPH, L/h, mL/m	-	%
Stroke rate		%		0.1 - 100.0%	0.1	100.0
		spm		1 - 360 spm	1	360
		GPH		0.001 - 15.828(GPH)	0.001	0.317
		L/h		0.001 - 59.994(L/h)	0.001	1.200
		mL/m		0.1 - 999.9(mL/m)	0.1	20.0
EXT mode selection	DIV			n/1 - n/9999	1	n/1
	MULT	%, spm		×1 - ×9999(%, spm)	1	×1
		GPH		0.001 - 99.999(GPH)	-	0.000 GPH
		L/h		0.001 - 99.999(L/h)	-	0.000 L/h
		mL/m		0.001 - 999.9(mL/m)	-	0.0 mL/m
	ANA.R			4-20, 20-4, 0-20, 20-0	-	4-20
	ANA.V	SP1 mA		0.0 - 20.0 mA	0.1	0.0 mA
		SP1 spm	%	0.0 - 100.0%	0.1%	0.0%
			spm	0 - 360 spm	1 spm	0 spm
			GPH	0.000 - 15.828(GPH)	0.001	0.000 GPH
			L/h	0.000 - 59.994(L/h)	0.001	0.000 L/h
			mL/m	0.0 - 999.9(mL/m)	0.1	000.0 mL/m
		SP2 mA		0.0 - 20.0 mA	0.1	20.0 mA
		SP2 spm	%	0.0 - 100.0%	0.1%	100.0%
			spm	0 - 360 spm	1 spm	360 spm
			GPH	0.000 - 15.828(GPH)	0.001	0.600 GPH
			L/h	0.000 - 59.994(L/h)	0.001	2.268 L/h
			mL/m	0.0 - 999.9(mL/m)	0.1	38.0 mL/m
	PLS	SP1 Hz		0.0 - 500.0 Hz	0.1	0.0 Hz
		SP1 spm	%	0.0 - 100.0%	0.1%	0.0%
			spm	0 - 360 spm	1 spm	0 spm
			GPH	0.000 - 15.828(GPH)	0.001	0.000 GPH
			L/h	0.000 - 59.994(L/h)	0.001	0.000 L/h
			mL/m	0.0 - 999.9(mL/m)	0.1	000.0 mL/m
		SP2 Hz		0.0 - 500.0 Hz	0.1	500.0 Hz
		SP2 spm	%	0.0 - 100.0%	0.1%	100.0%
			spm	0 - 360 spm	1 spm	360 spm
			GPH	0.000 - 15.828(GPH)	0.001	0.600 GPH
			L/h	0.000 - 59.994(L/h)	0.001	2.268 L/h
			mL/m	0.0 - 999.9(mL/m)	0.1	38.0 mL/m
	BATCH	GPH		0.001 - 26.385(GPH)	0.001	0.026(G)
		L/h		0.001 - 99.999(L/h)	0.001	0.100(L)
		mL/m		0.1 - 99999.9(mL/m)	0.1	100 (mL)

Parameters						Setting ranges	STEP[*1]	Default
USER mode	PG.EXT (EXT mode setting)					With EFS flow sensor: ANA.R/V, PLS, BATCH	-	ANA.R
						With no EFS flow sensor: DIV, MULT, ANA.R/V, PLS	-	DIV
		DIV, MULT or BATCH in EXT mode selection				bF-OF/bF-ON	-	DIV: bF-OF MULT/BATCH: bF-ON
		ANA.R or ANA.V in EXT mode selection				ANA.R/V	-	ANA-R
		ANA.V is selected in user mode				LINE/BOX/LIMIT	-	LINE
		PLS in EXT mode selection	RANGE			500/100	-	500
			CURVE			LINE/BOX/LIMIT	-	LINE
	OUT	OUT1	1.OUT.T (OUT1 selection)			1.ALM/1.FL.ER/1.F.CHK/ 1.OFF	-	1.ALM
			1.STOP (STOP alarm)			ON/OFF	-	ON
			1.P.STP (Pre-STOP alarm)			ON/OFF	-	OFF
			1.I.LOC (Interlock alarm)			ON/OFF	-	OFF
			1.COMP (BATCH/MULT completion)			ON/OFF	-	OFF
			1.FL.ER	1.FLOW (Out of measurement)		0.1 - 999.9 mL/m (0.006 - 59.994 L/h) (0.001 - 15.828 GPH)	0.1	2.0 mL/m (0.120 L/h) (0.031 GPH)
				1.OUT.D (OUT1 delay time)		0 - 999 sec	1	0 sec
			1.F.CHK	1.FC.AL (Poor flow alarm)		0.0 - 999.9 mL/m (0.000 - 59.994 L/h) (0.000 - 15.828 GPH)	0.1 (0.001)	3.0 mL/m (0.180 L/h) (0.047 GPH)
				1.AL.TM (Alarm delay time)		1. - 30. min	1	5.
				1.ON-OF (Pump on-off selection)		P.ON/P.OFF	-	P.OFF
				1.OUT.L (OUT logic selection)		N.O./N.C.	-	N.O.
		OUT2	2.OUT.T (OUT2 selection)			2.SENS/2.SPM/2.ALM/ 2.FL.ER/2.F.CHK/2.OFF	-	2.OFF
			2.STOP (STOP alarm)			ON/OFF	-	ON
			2.P.STP (Pre-STOP alarm)			ON/OFF	-	OFF
			2.I.LOC (Interlock alarm)			ON/OFF	-	OFF
			2.COMP (BATCH/MULT completion)			ON/OFF	-	OFF
			2.FL.ER	2.FLOW (Out of measurement)		0.1 - 999.9 mL/m (0.006 - 59.994 L/h) (0.001 - 15.828 GPH)	0.1 (0.001)	2.0 mL/m (0.120 L/h), (0.031 GPH)
				2.OUT.D (OUT2 delay time)		0 - 999 sec	1	0 sec

Parameters					Setting ranges	STEP*1	Default
USER mode	OUT	OUT2	2.F.CHK	2.FC.AL (Poor flow alarm)	0.0 - 999.9 mL/m (0.000 - 59.994 L/h) (0.000 - 15.828 GPH)	0.1 (0.001)	3.0 mL/m (0.180 L/h), (0.047 GPH)
				2.AL.TM (Alarm delay time)	1. - 30. min	1	5.
				2.ON-OF (Pump on-off selection)	P.ON,P.OFF	-	P.OFF
				2.OUT.L (OUT logic selection)	N.O./N.C.	-	N.O.
		ANA-LOGUE		ANA.4 (4mA)	0.0 - 100.0 % 0 - 360 spm 0.0 - 999.9 mL/m (0.000 - 59.994 L/h) (0.000 - 15.828 GPH)	0.1 1 0.001	0.0 % 0 spm 0.0000mL/m (L/h) (GPH)
				ANA.20 (20mA)	0.0 - 100.0 % 0 - 360 spm 0.0 - 999.9 mL/m (0.000 - 59.994 L/h) (0.000 - 15.828 GPH)	0.1 1 0.001	100.0 % 360 spm 38.0 mL/m (2.280 L/h) (0.601 GPH)
	F.CHK(FCP/FCM setting)*2				A.MODE/B.MODE/ C.MODE/D.MODE/OFF	-	OFF
		A.MODE		FC.MUM (Number of dry shots)	1 - 60	1	1
		B.MODE/ C.MODE		FC.MUM (Number of dry shots)	1 - 60	1	1
				FC.POF (Dry shots to P-OFF)	1 - 60	1	1
		D.MODE		FC.TIM (Detection time)	1. - 60. min	1	1.
				FC.PRM (Priming time)	1. - 60. min	1	1.
				FC.RTN (Return time)	0.01 - 60.00 min. sec	1	1.00
	INPUT setting	INPUT		INP.T (Input1 mode selection)	PULS/I.LOCK/AUX/ B-S/S (BATCH)	-	PULS
				INP.L (Input1 logic selection)	CL-OF/CL-ON	-	CL-ON
		STOP. L (STOP)			CL-OF/CL-ON	-	CL-ON
		P.STP. L (Pre-STOP)			CL-OF/CL-ON	-	CL-ON
	CODE (PIN number)				00000 - 99999	1	00000
	DATA	TOTAL (Total flow volume)			0 - 99999(mL/L/G)	-	0(mL/L/G)
		SHOT.C (Total number of strokes)			0 - 99999	-	0 shot (×1k)
		OUT 1.C (Total output)			0 - 99999	-	0
		OUT 2.C (Total output)			0 - 99999	-	0
		PWR.ON (Total power connection time)			0 - 99999 hour	-	0 hour
		OPER.T (Total operating time)			0 - 99999 hour	-	0 hour

*1 The flow rate increases/decreases by 1spm as pushing the UP/DOWN keys. Press and hold either key for quick change.

*2 The F.CHK parameter is not enabled when the EFS flow sensor is connected to the pump.

Programming flow

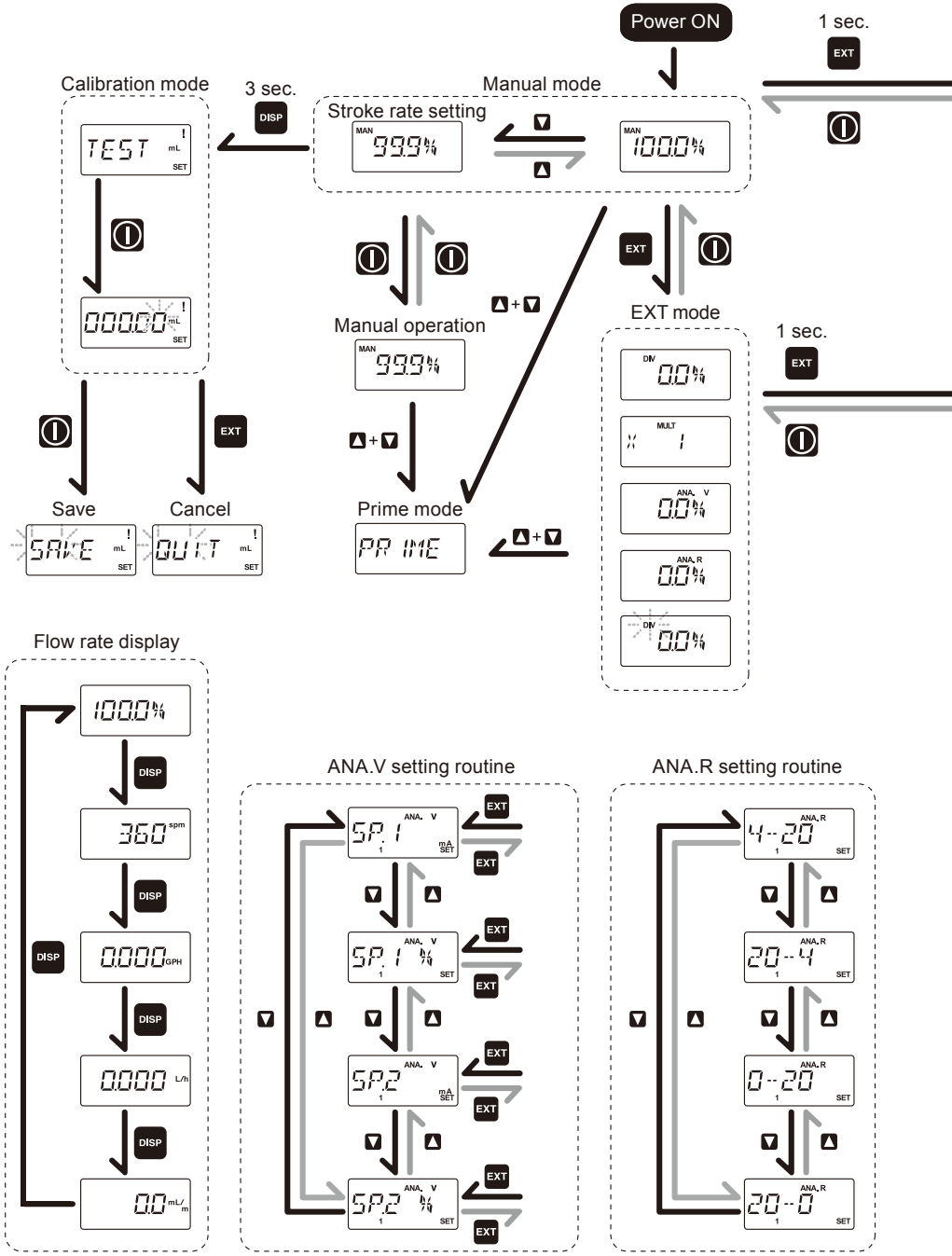

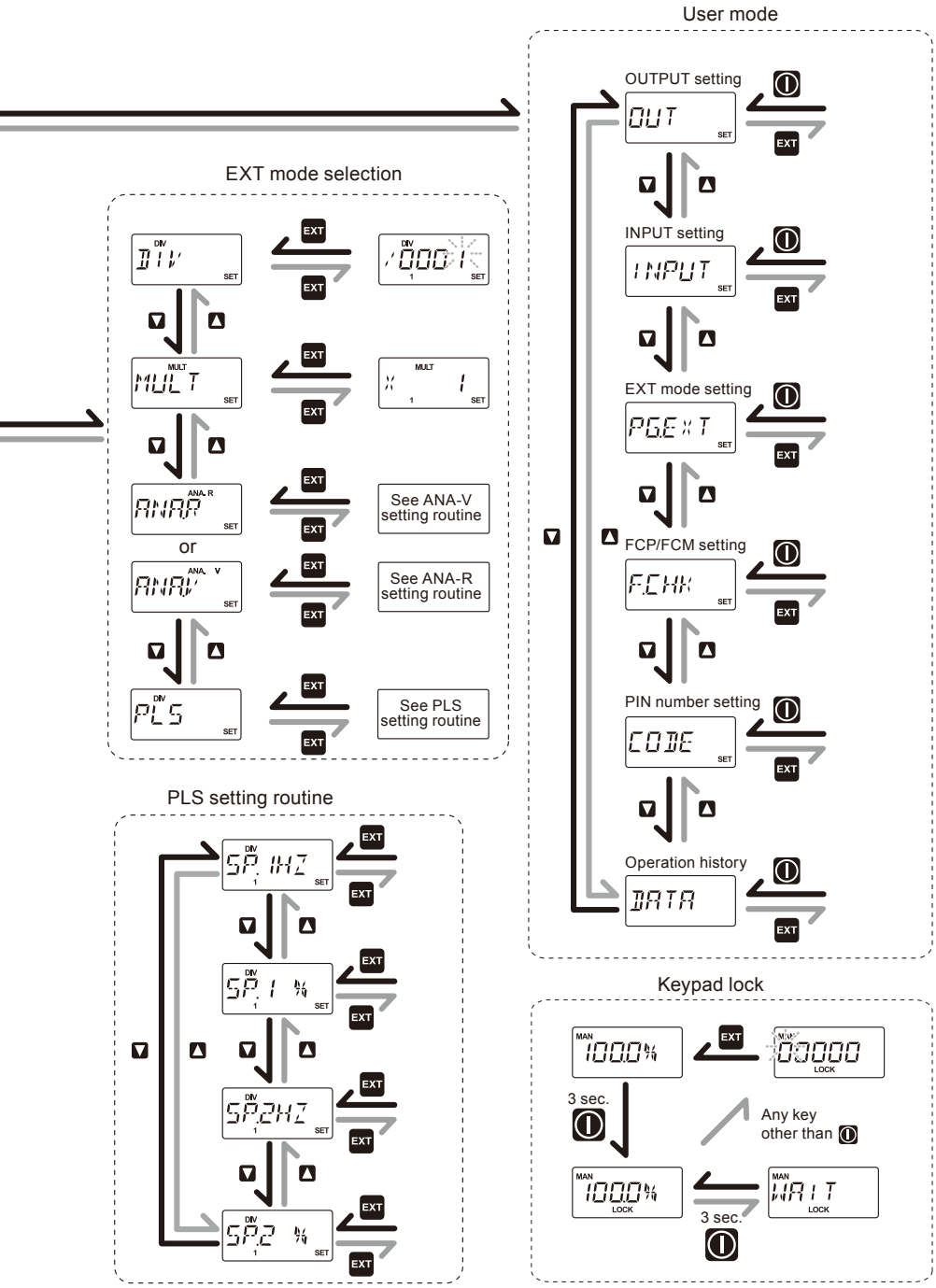
User mode
OUTPUT setting
OUT
INPUT setting
INPUT
EXT mode setting
PGEXT
FCP/FCM setting
FCHK
PIN number setting
CODE
Operation history
DATA
EXT mode selection
DIV
0001
MULT
1
See ANA-V setting routine
or
See ANA-R setting routine
See PLS setting routine
PLS setting routine
SP.1HZ
SP.1 %
SP.2HZ
SP.2 %
Keypad lock
MAN
100.0%
00000
LOCK
3 sec.
Any key other than
WAIT
EXT
SET

Manual operation

Run or stop the pump by keypad operation.

1 **Turn on power.**

The LED lights and a display related to the current mode appears on the screen.

*The pump waits in the manual mode when turning on power with a default setting or calls up a previous mode at the last shutoff.

*The pump waits for 20 minutes to start operation when powered on with the EFS flow sensor.

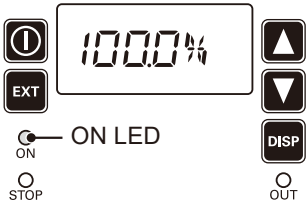

2 **Enter manual mode.**

Move to the next step when a stroke rate (0.1-100.0%) is shown on the screen.

When the pump is in the EXT mode:

Push the start/stop key once to enter the wait state in the manual mode.



When the "STOP" or "-STOP" indication is on the screen:

See page 88 and 89 to release the condition.

3 **Push the start/stop key.**

The pump starts to run. The LED blinks green at each shot.

*The flow rate unit changes in between "spm", "%", "GPH", "L/h" and "mL/m".

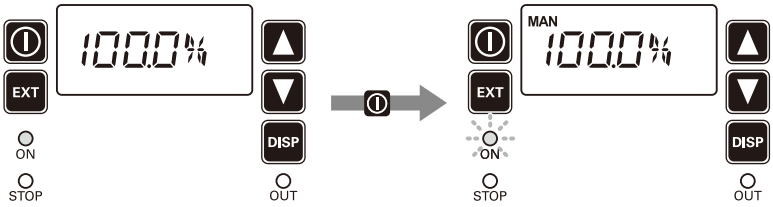

EXT operation

■ Digital control

The pump operation is controlled by the external (pulse) signal. Set a multiplier or a divisor before operation. Digital control is divided into two mode as below.

DIV mode



Set the number of signals per shot to control the pump.

MULT mode

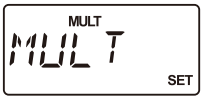

Set the number of shots per signal to control the pump.

NOTE

When the pump is used with the EFS sensor, the DIV or MULT mode is not enabled.

1 **Enter EXT mode.**

Push the EXT key to move from manual mode to EXT mode.



2 **Press and hold the EXT key for one second and enter the EXT mode selection.**



3 **Select "DIV" or "MULT".**

Scroll through the EXT mode selection by the UP and DOWN keys.

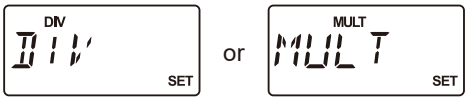

4 **Push the EXT key once.**

5 **Use the UP or DOWN key to set a divisor or a multiplier.**

*Shift to the next digit by pushing the DISP key for divisor setting.

Divisor setting



Multiplier setting

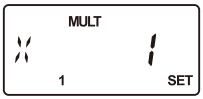

6 **Push the EXT key to return to the EXT mode selection.**

7 **Push the start/stop key to return to EXT mode.**

The pump starts to run according to the setting.

■ Buffer ON/OFF selection (MULT/DIV)

If the buffer is turned ON, excessive external signals that have not been processed in the MULT or DIV operation are temporally stored and processed after the signal entry is stopped.

- **When "bM-ON" is selected:**
  Excessive external signals are stored.
- **When "bM-OF" is selected:**
  Excessive external signals are not stored.

EXT mode setting

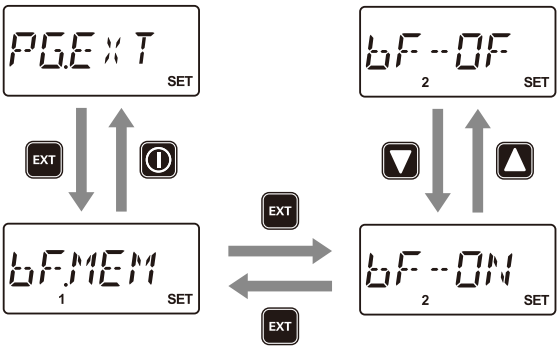

■ **Analogue proportional control**

Select the "ANA.V" or "ANA.R" option in the user mode.

When the "ANA.R" mode is selected:



The "4-20", "20-4", "0-20" and "20-0" presets are available.

When the "ANA.V" mode is selected:



A new proportional line can be set with the LINE, BOX or LIMIT patterns.

NOTE

The feedback from the EFS flow sensor supports the ANA.V proportional control only.

ANA.R (Analogue rigid)

1 **Enter EXT mode.**

Push the EXT key to move from manual mode to EXT mode.

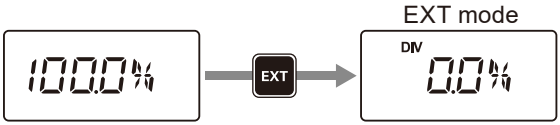

2 **Press and hold the EXT key for one second and enter the EXT mode selection.**



3 **Select "ANA.R".**

Scroll through the EXT mode selection by the UP and DOWN keys.

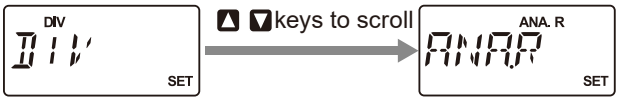

Skip to the item 5 when "ANA.R" is selectable. Otherwise, skip to the item 4 to select "ANA.R" through the EXT mode setting.

4 **Return to the MAN mode (pump stops). Press and hold the EXT key for 1 second to call up the user mode menu. Select the "PG.EXT", "ANA" and then "ANA.R" options with the EXT key.**

Return to the EXT mode selection after the selection by pushing the start/stop key a few times.

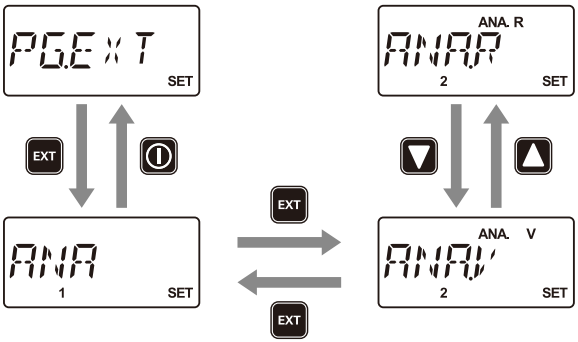

5 **Push the EXT key and scroll through the ANA.R preset patterns by the UP and DOWN keys.**

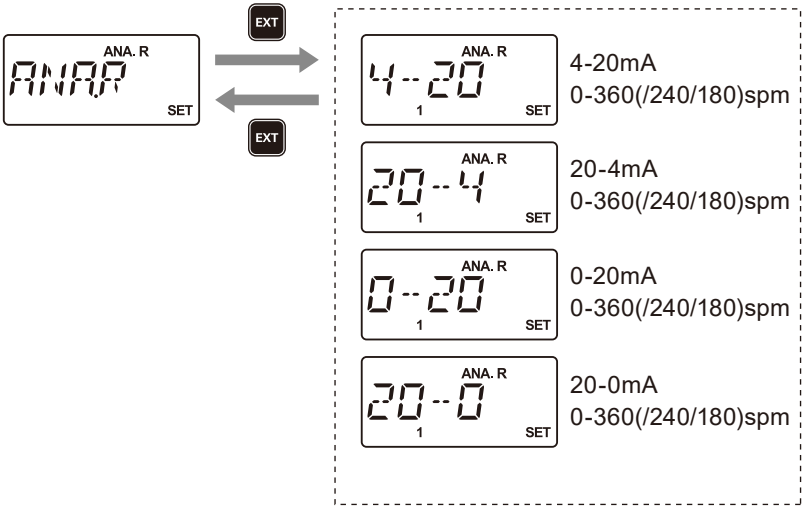

6 **Push the EXT key to return to the EXT mode selection and then push the start/stop key to enter EXT mode.**

The pump starts to run in proportional control according to the ANA.R setting.

ANA.V (Analogue variable)

1 **Enter EXT mode.**

Push the EXT key to move from manual mode to EXT mode.

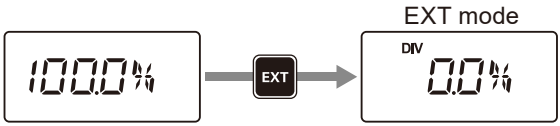

2 **Press and hold the EXT key for one second and enter the EXT mode selection.**



3 **Select the "ANA.R" or "ANA.V" option.**

Scroll through the EXT mode selection by the UP and DOWN keys.

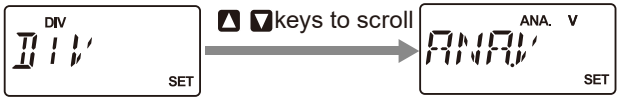

4 **Push the start/stop key twice to return to the MAN mode.**

5 **Press and hold the EXT key for 1 second to call up the user mode menu.**

6 **Select the "PG.EXT" option and push the EXT key.**



7 **Select the "ANA" option and then the "ANA.R" or "ANA.V" option.**

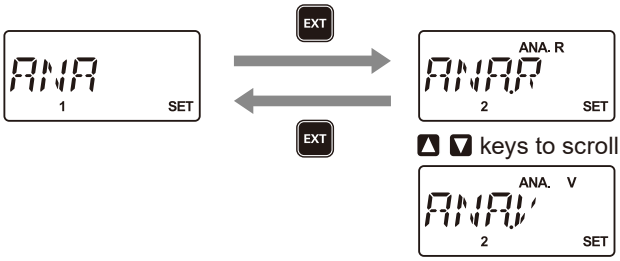

8 **Use the UP and DOWN keys to select the "CURVE" option and determine the operation pattern from the "LINE", "BOX" or "LIMIT" options. See below.**

Return to the EXT mode selection after the selection.

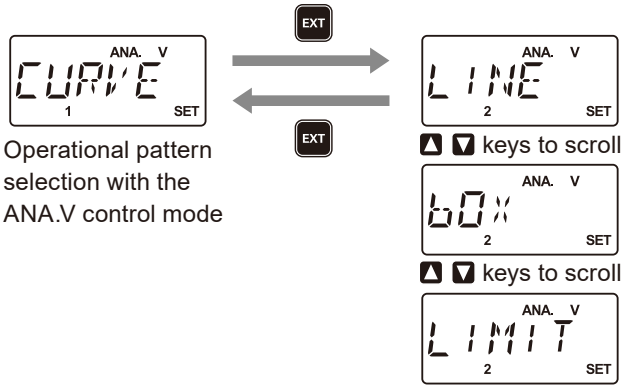

9 **Push the EXT key to move the ANA.V setting routine.**

10 **Enter a current value and a stroke rate at SP1 and SP2.**

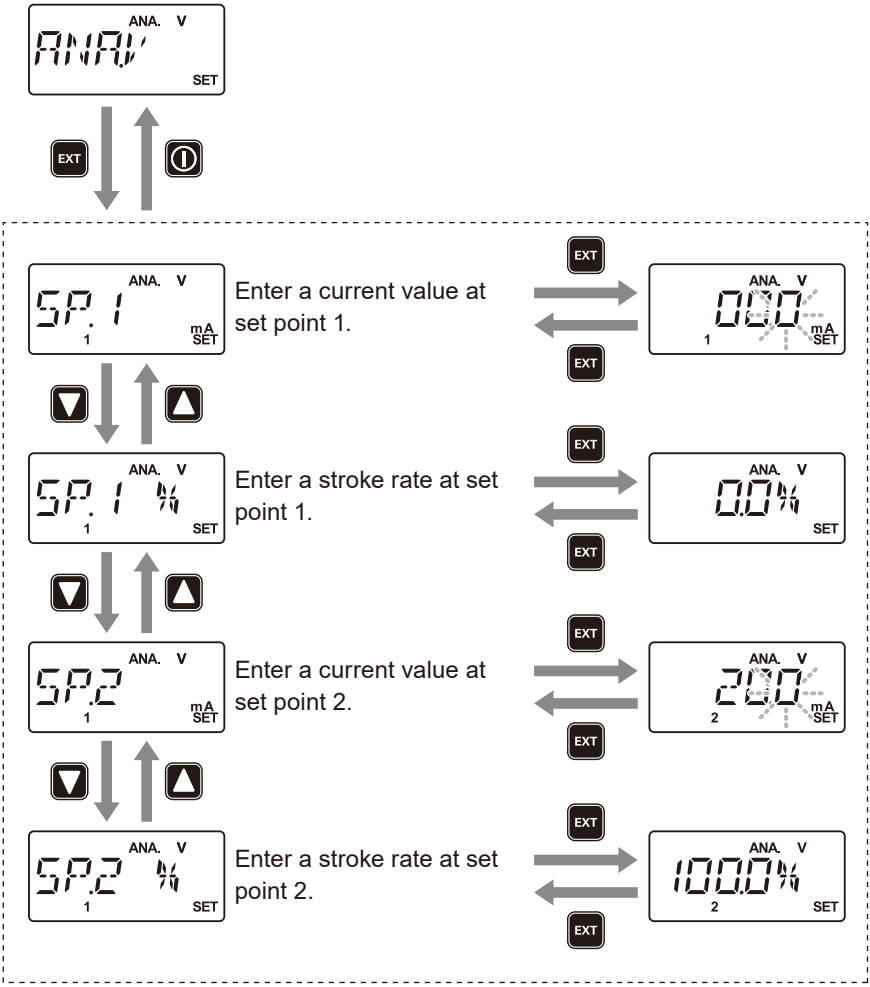

11 **Push the start/stop key twice to move back to the EXT mode.**

The pump starts to run in proportional with the external current signal.

■ Pulse proportional control

Choose the "PLS" option in the EXT mode selection.

When the "PLS" option is selected:



A proportional control pattern can be newly set according to the LINE, BOX, or LIMIT pattern.

PLS (Pulse variable)

1 **Enter EXT mode.**

Push the EXT key to move from manual mode to EXT mode.

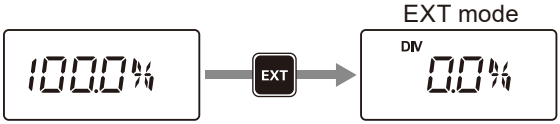

2 **Press and hold the EXT key for one second and enter the EXT mode selection.**



3 **Select the "PLS" option.**

Scroll through the EXT mode selection by the UP and DOWN keys.

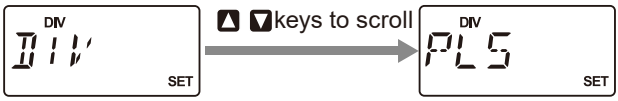

4 **Push the start/stop key twice to return to the MAN mode.**

5 **Press and hold the EXT key for 1 second to call up the user mode menu.**

6 **Select the "PG.EXT" option and push the EXT key.**

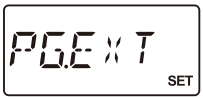

7 **Select the "RANGE" option and determine the pulse rate**

Select the "100" or "500" option according to the external pulse rate inputted from an external device to the pump.

*Applicable pulse rate of 0.0-100.0Hz with the "100" option.

*Applicable pulse rate of 0.0-50.00Hz with the "500" option.

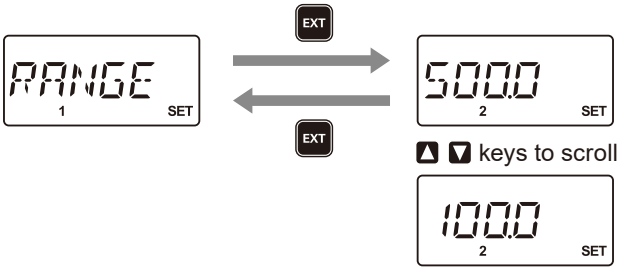

8 **Use the UP and DOWN keys to select the "CURVE" option and determine the operation pattern from the "LINE", "BOX" or "LIMIT" options. See below.**

Return to the EXT mode selection after the selection.

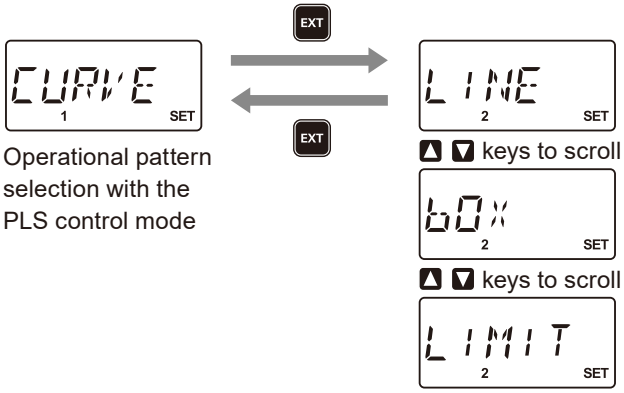

9 **Push the EXT key to move the PLS setting routine.**

10 **Enter a current value and a stroke rate at SP1 and SP2.**

The SP1 and 2 pulse rates can be shifted to the next digit every time the DISP key is pushed.

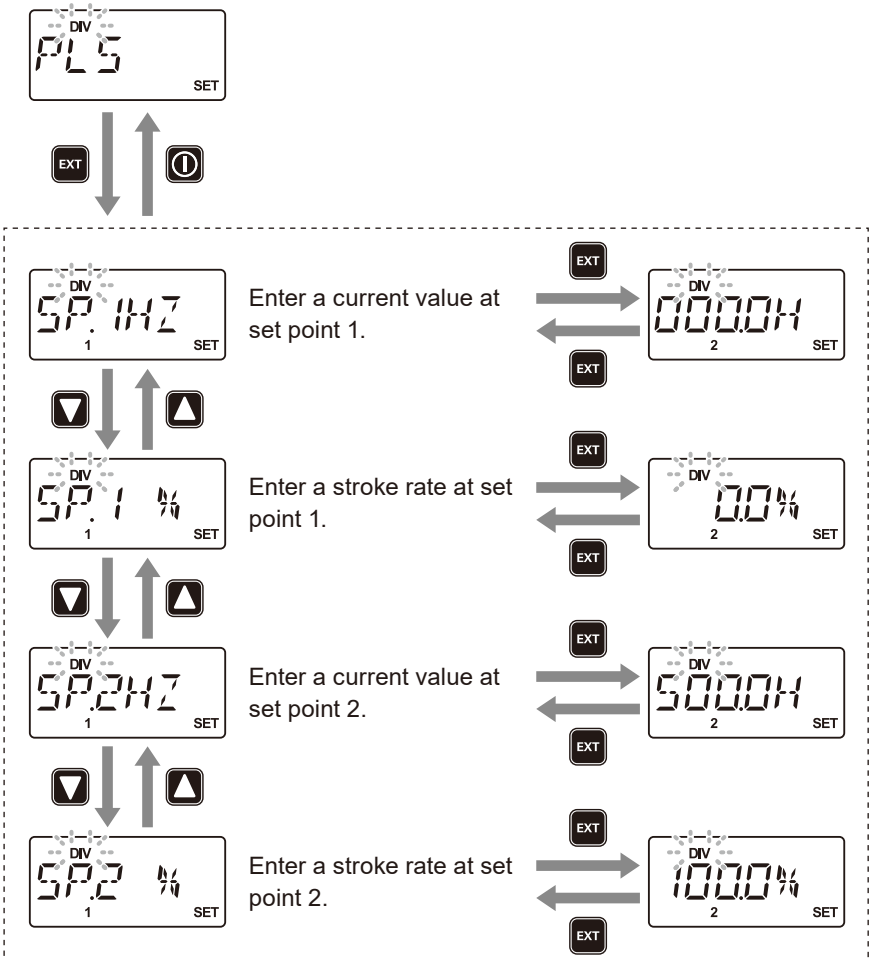

11 **Push the start/stop key twice to move back to the EXT mode.**

The pump starts to run in proportional with the external pulse.

Priming function

This key operation runs the pump at the maximum stroke rate in operation.

1 **Press and hold both the UP and DOWN keys.**

The pump runs at the maximum stroke rate while both keys are pressed.

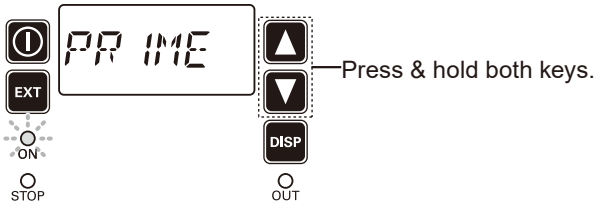

Keypad lock

Keypad lock can be active for the prevention of erroneous key operation.

NOTE

Any key operation is not acceptable when the keypad lock is active. In an emergency, pressing the start/stop key for three seconds, the pump enters a wait state and stops running. Pressing the same key once again will resume operation.

■ Keypad lock activation

1 **Press and hold the start/stop key for more than three seconds.**

"LOCK" indication appears on the screen.

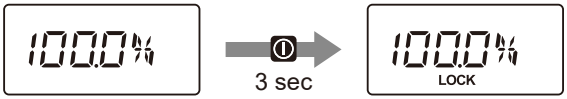

■ Keypad lock release

1 **Push any key other than the start/stop.**



2 **Enter pin number.**

Shift to the next digit by pushing the DISP key.

*A default PIN number is "00000".

3 **Push the EXT key**

The keypad lock state then will be released.

*If the pin number is not correct, "FAIL" will be shown and the lock state will continue.



■ Emergency stop with a keypad lock state

1 **Press and hold the start/stop key for three seconds.**

The pump enters a wait state and stops running with keypad locked. Pressing the same key once again will resume operation with keypad locked.

*Keypad lock can not be released during emergency stop. Always restart the pump and then enter the deactivation pin number.

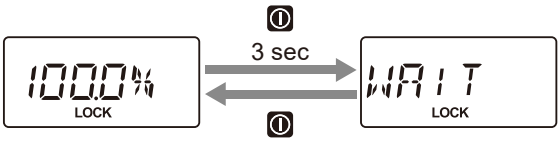

Unit change

%, spm, GPH, L/h and mL/m cycle through every time the DISP key is pushed. To ensure the correct flow reading, flow calibration must be performed in advance. See page 63 for detail. A stroke rate is shown in % with default setting.

■ Stroke rate unit

% indication



A flow rate is shown in between 0 and 100%. 100% means 360spm.

spm indication



Shows a stroke rate per minute.

■ Flow rate unit

The following flow units are available.

GPH indication



A flow rate is shown in gallon per hour.

L/h indication



A flow rate is shown in litter per hour.

mL/m indication



A flow rate is shown in millilitre per minute.

*A target flow is shown with the "Disp" icon when the EFS flow sensor is installed.
*An actual flow rate is shown with the "Disp" icon during feedback control with the EFS flow sensor.

User mode

The following features can be set. Move to the user mode with the EXT key in the wait state (MAN mode).



OUTPUT setting (page 85)
Parameter setting of the OUT1, OUT2 and analogue output.



INPUT setting (page 88)
Parameter setting of the INPUT.

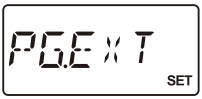

EXT mode setting (page 90)
Selection of buffer on/off (MULT/DIV) and ANA.R/ANA.V/PLS for the EXT mode.



FCP/FCM setting (page 90)
Selection of the operational behaviour with the FCP or FCM.



PIN number entry (page 93)
A PIN is required to release a keypad lock state.



Operation history (page 94)
Information such as total flow volume and total power connection time is shown.

■ Output setting

Parameter setting for the OUT1(mechanical relay), OUT2(PhotoMOS relay) and analogue output.

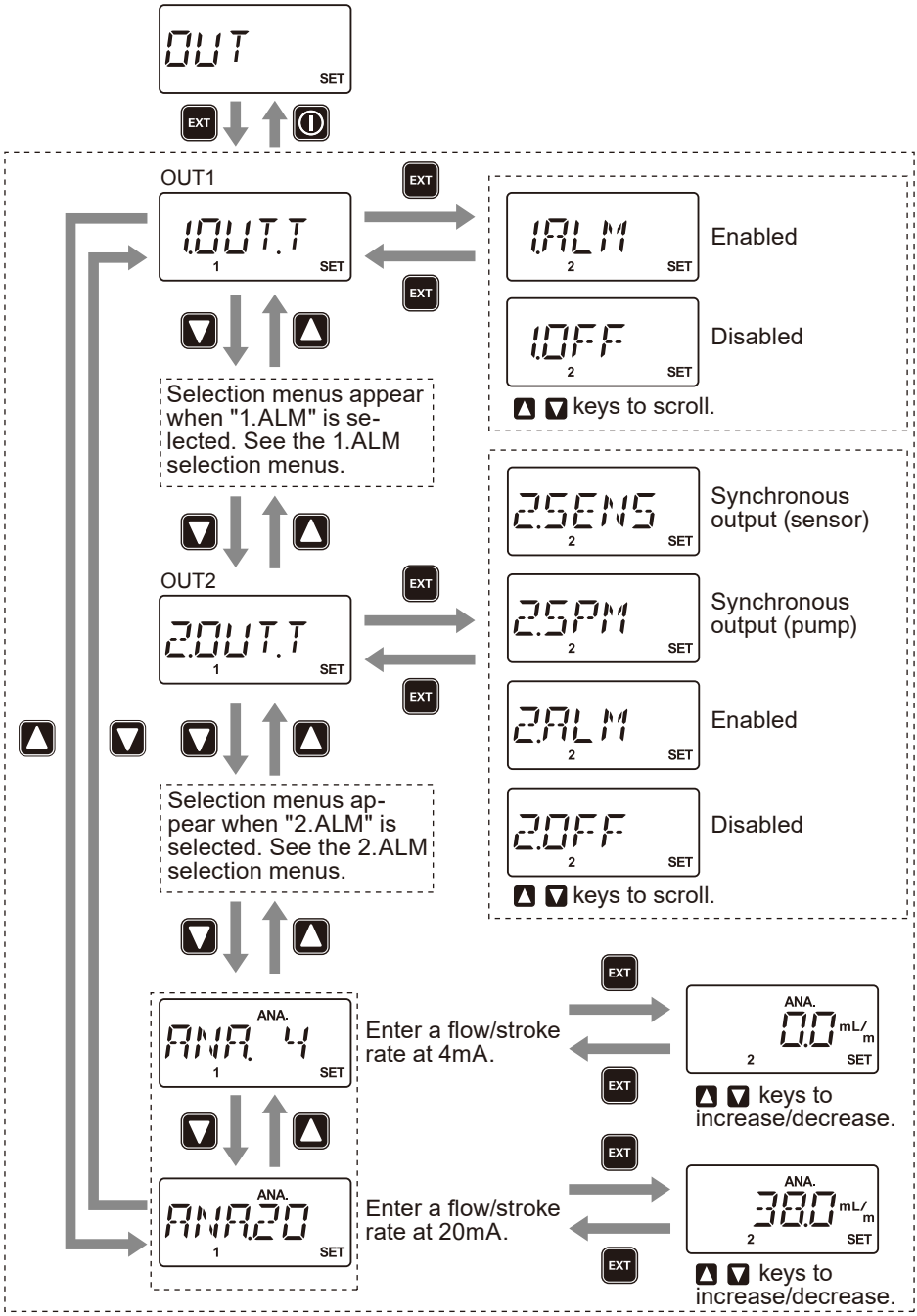

1.ALM selection menus (OUT1 mechanical relay)

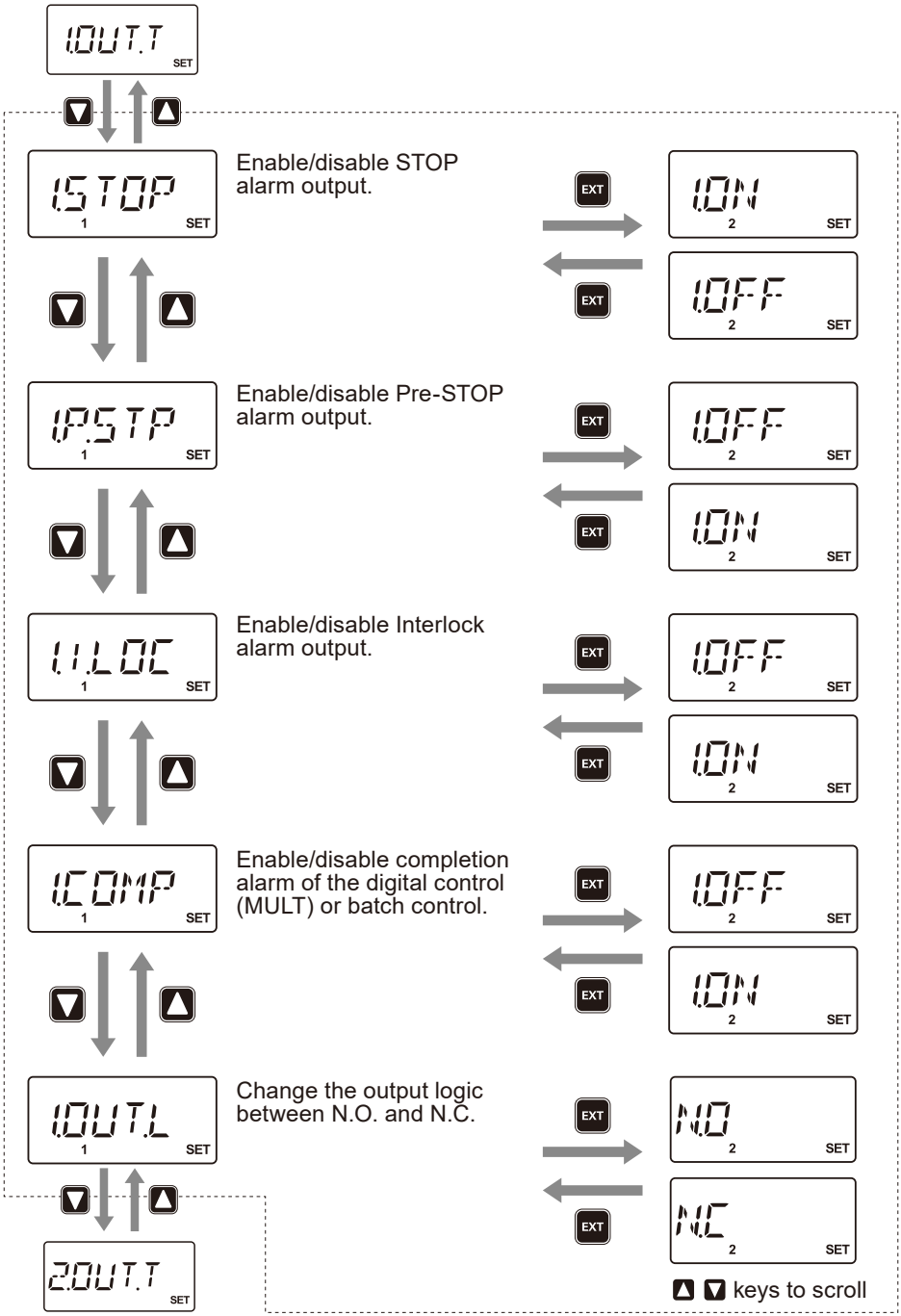

2.ALM selection menus (OUT2 photoMOS relay)

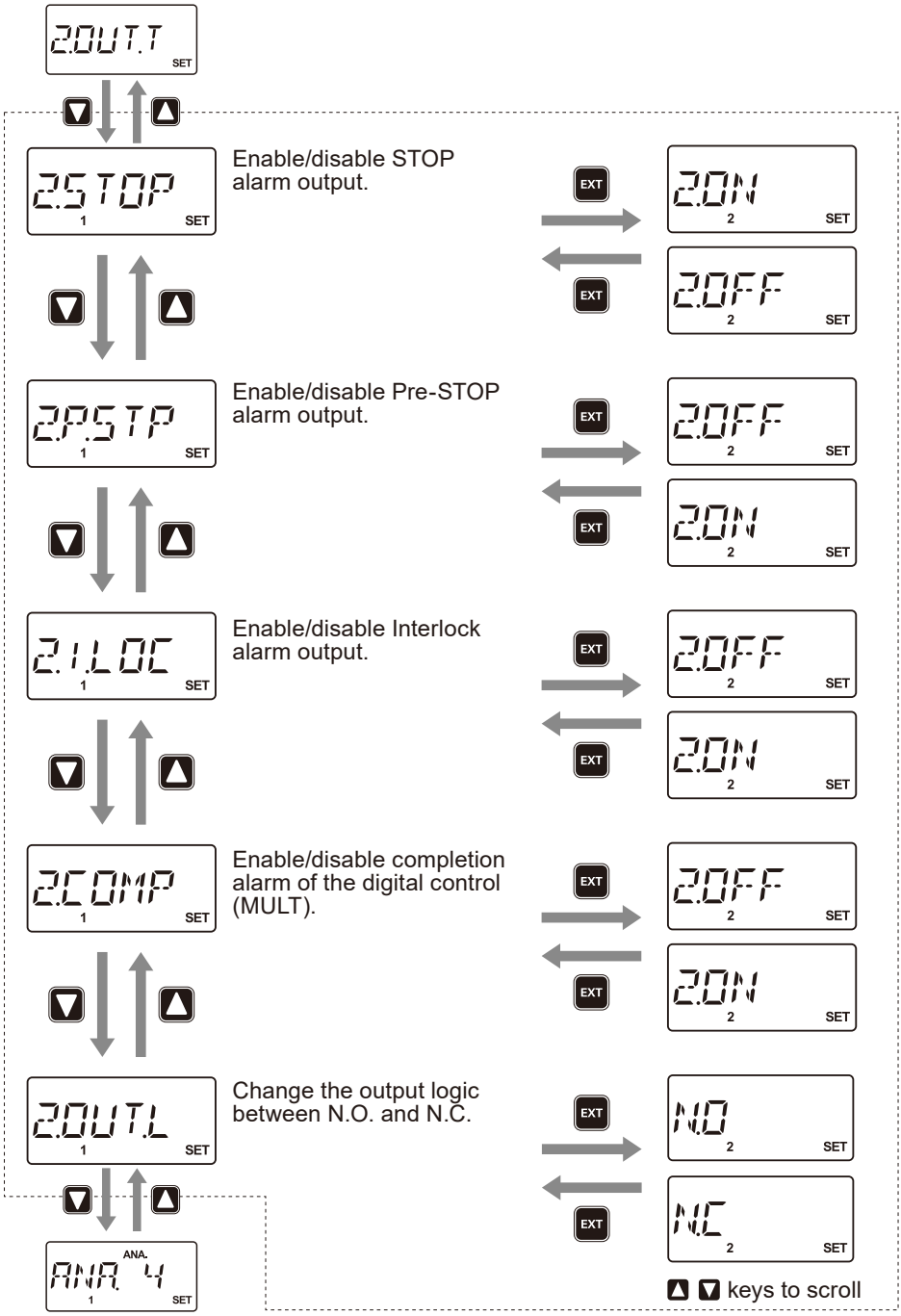

Analogue out

The pump outputs a current value of 4-20mA according to a flow/stroke rate.

*The default setting is 0spm at 4mA and 360spm at 20mA.

*One of the flow rate units of mL/m, L/h or GPH is available when the EFS flow sensor is mounted.

■ INPUT setting

Parameter setting for the INPUT.

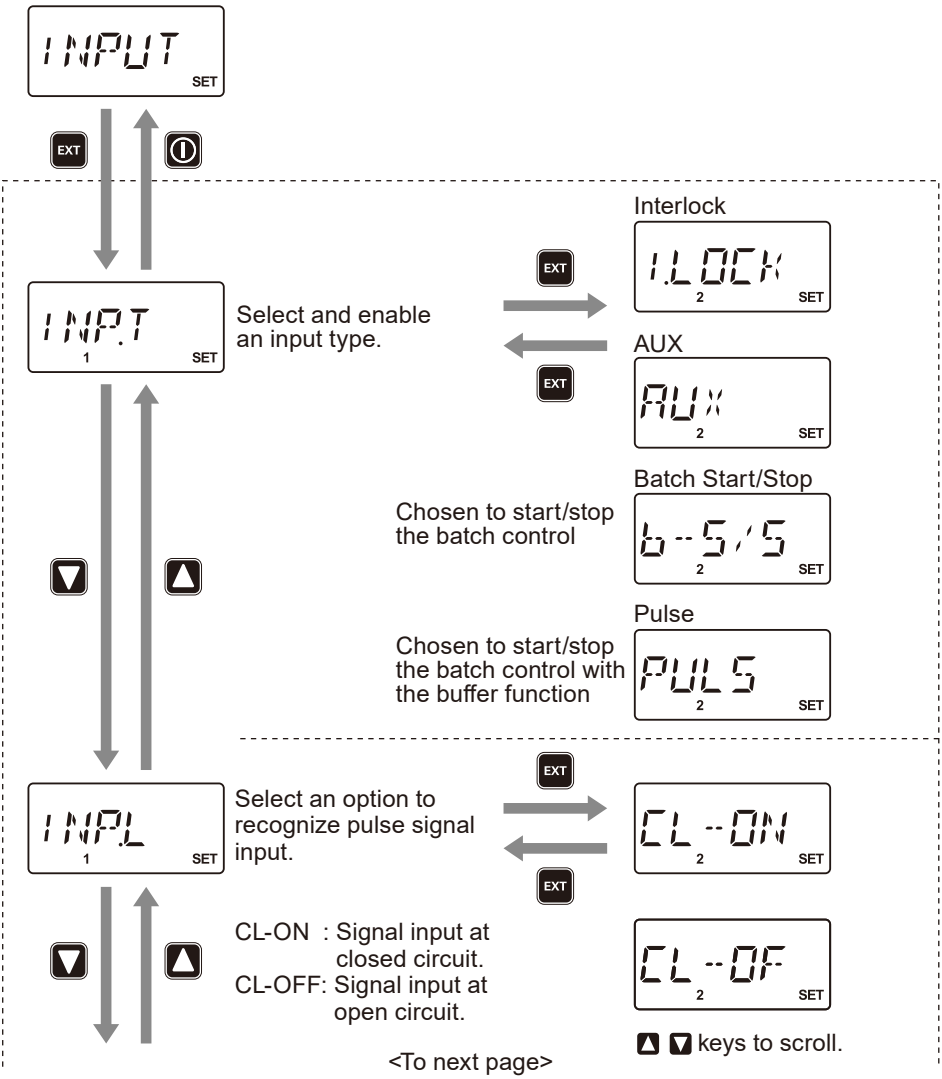

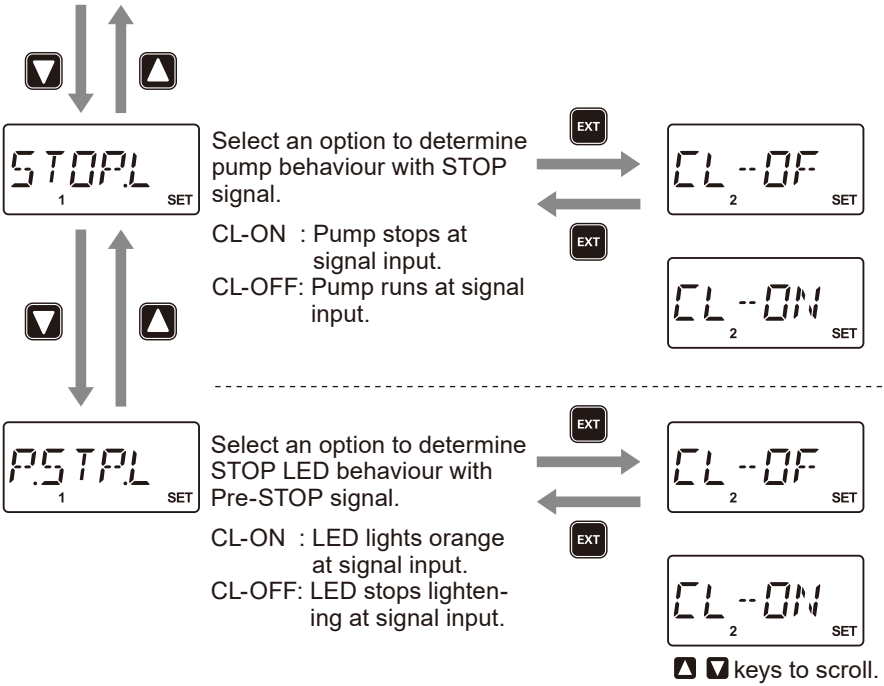
STOPL
1
SET
Select an option to determine pump behaviour with STOP signal.
CL-ON : Pump stops at signal input.
CL-OFF: Pump runs at signal input.
EXT
CL--OF
2
SET
CL--ON
2
SET
P.STPL
1
SET
Select an option to determine STOP LED behaviour with Pre-STOP signal.
CL-ON : LED lights orange at signal input.
CL-OFF: LED stops lightening at signal input.
CL--OF
2
SET
CL--ON
2
SET
keys to scroll.

■ EXT mode setting

Selection of buffer on/off and ANA.R/ANA.V for the EXT mode.

Buffer ON/OFF selection (MULT/DIV)

See page 72 for detail.

Analogue proportional control

See page 73 for detail.

■ FCP/FCM setting

Selection of the operational behaviour with the FCP or FCM.

*This parameter is not enabled when the EFS flow sensor is connected to the pump.

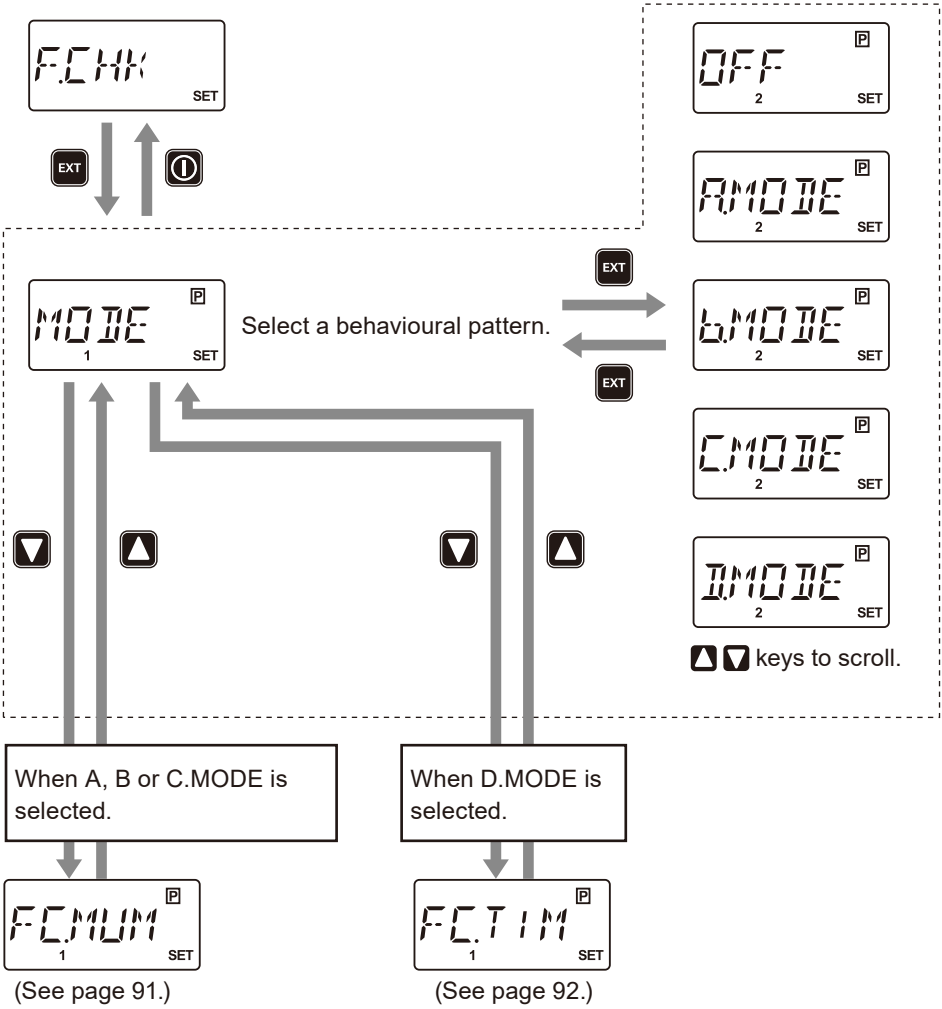

(See page 91.)

(See page 92.)

(See page 90.)

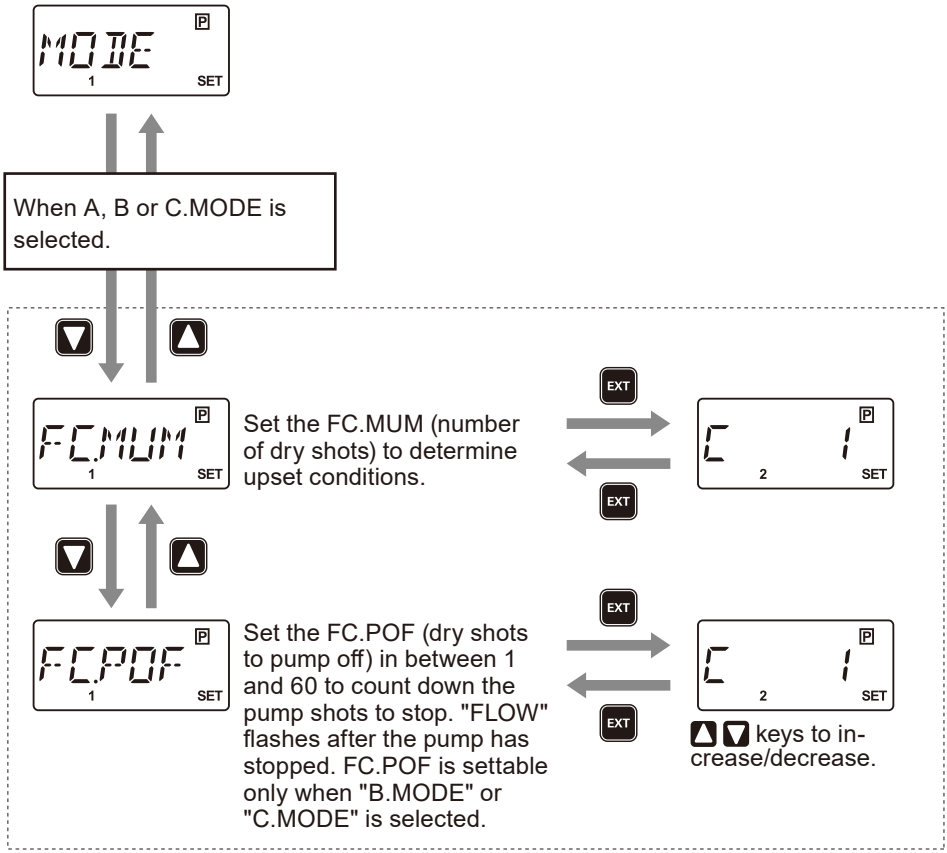
MODE
P
1
SET
When A, B or C.MODE is selected.
FC.MUM
P
1
SET
Set the FC.MUM (number of dry shots) to determine upset conditions.
EXT
C 1
P
2
SET
EXT
FC.POF
P
1
SET
Set the FC.POF (dry shots to pump off) in between 1 and 60 to count down the pump shots to stop. "FLOW" flashes after the pump has stopped. FC.POF is settable only when "B.MODE" or "C.MODE" is selected.
EXT
C 1
P
2
SET
EXT
keys to increase/decrease.

(See page 90.)

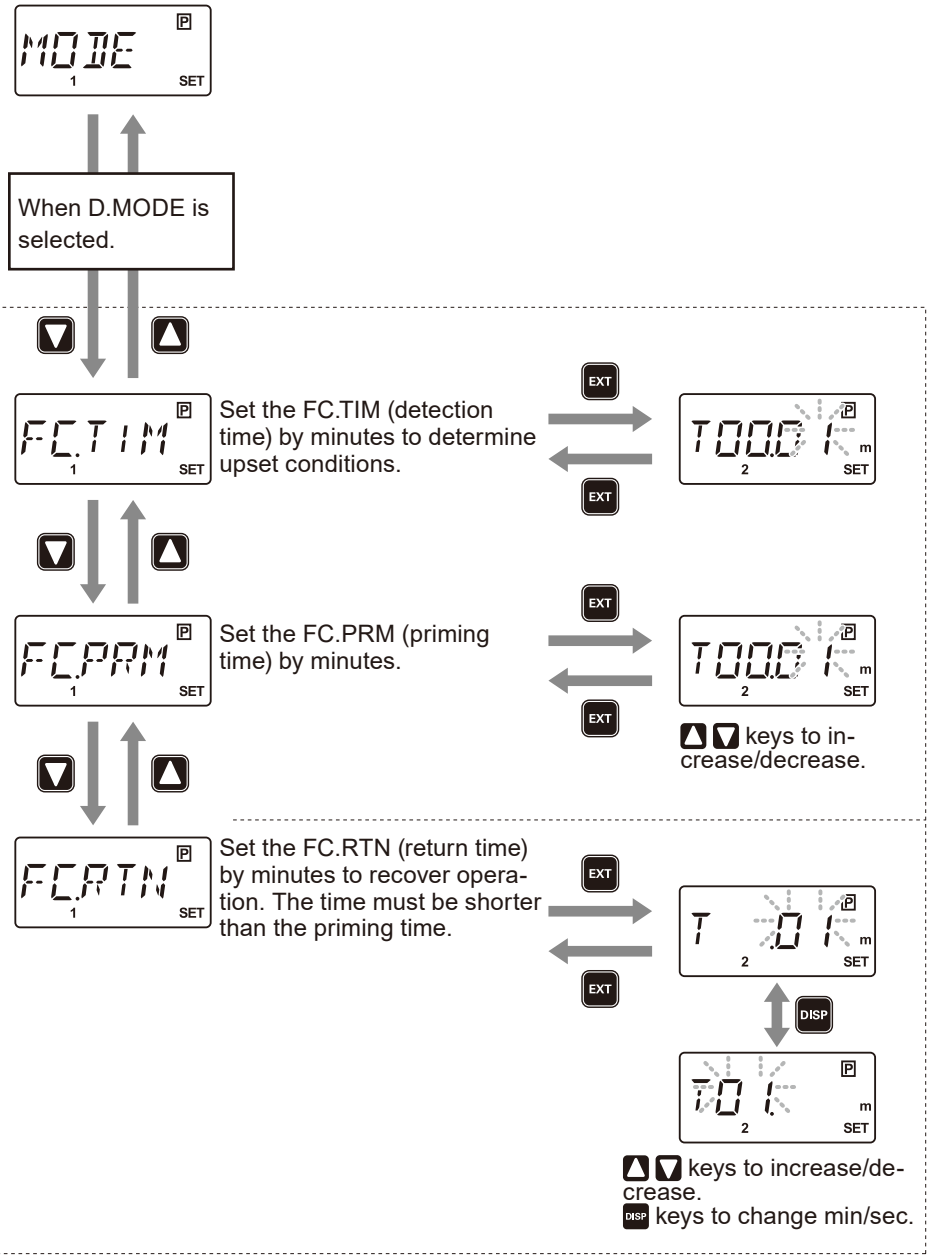
MODE
1
SET
When D.MODE is selected.
FC.TIM
Set the FC.TIM (detection time) by minutes to determine upset conditions.
EXT
T00.01
m
FC.PRM
Set the FC.PRM (priming time) by minutes.
keys to increase/decrease.
FC.RTN
Set the FC.RTN (return time) by minutes to recover operation. The time must be shorter than the priming time.
T .01
DISP
keys to increase/decrease.
keys to change min/sec.

■ PIN number entry

A PIN is required to release a keypad lock state.

*The default setting is 00000.



■ Operation history

Information such as total flow volume and total power connection time is shown. Pushing both the EXT and DISP key defaults these information except total power connection time and total operating time.

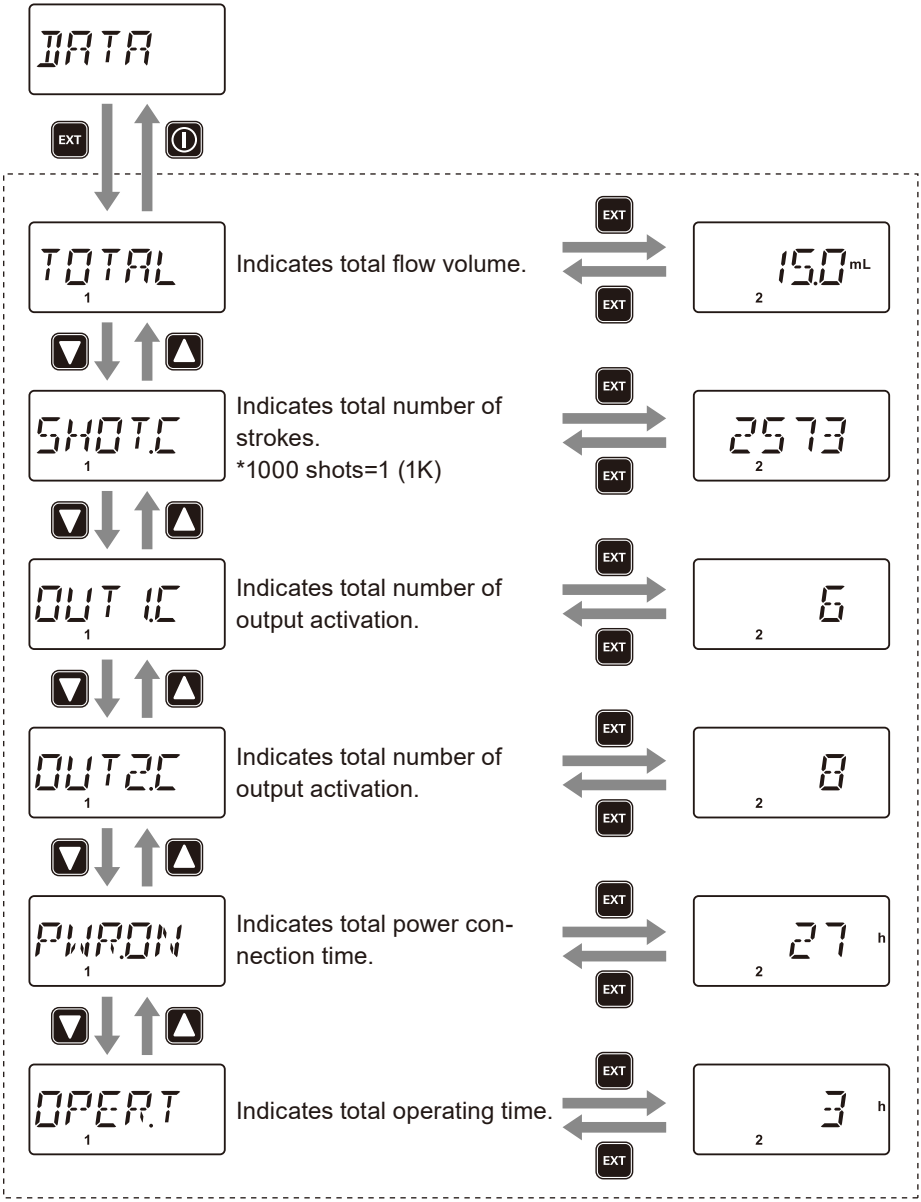

Combination with the EFS flow sensor

■ Feedback control

The pump automatically controls a stroke rate to meet the target flow rate, measuring an actual flow with the EFS sensor.

1 **Push the DISP key when the pump is waiting in MAN mode.**

Select the "GPH", "L/h" or "mL/m" flow unit



When the pump is in the EXT mode:

Push the start/stop key once to enter the wait state in the manual mode.

When the "STOP" or "-STOP" indication is on the screen:

See page 88 and 89 to release the condition.

2 **Push the start/stop key.**

The pump starts to run under feedback control. ON LED flashes in green at each shot.

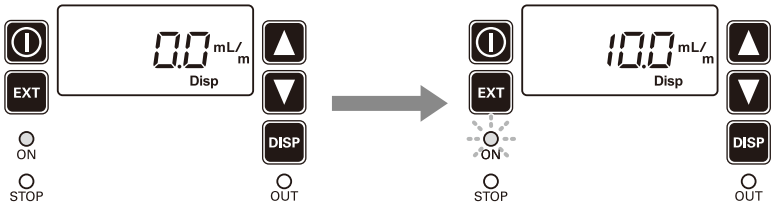

*▲▼ keys to determine a target flow rate. Set the liquid volume per shot by the stroke length knob in advance. See page 62.

*Push of the DISP key scroll through the stroke rate units of "%", "spm", and the flow rate units of "GPH", "L/h" and "mL/m". See page 83.

*The flow rate unit selected here remains and reappears when the pump stops even if it is changed to the stroke rate unit of "spm" or "%" during operation.

■ Batch control



The pump runs until meeting the set volume per pulse and stops afterwards.

1 **Enter EXT mode.**

Push the EXT key to move from manual mode to EXT mode.



2 **Press and hold the EXT key for one second and enter the EXT mode selection.**



3 **Select "BATCH".**

Scroll through the EXT mode selection by the UP and DOWN keys.



4 **Set the volume of discharge end push the EXT key.**

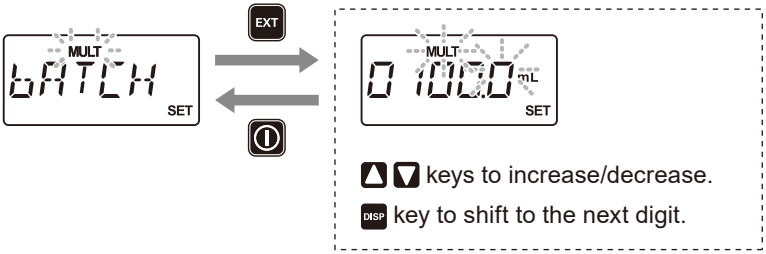

5 **Push the start/stop key to enter EXT mode.**

The pump starts the batch control.

■ Buffer ON/OFF selection (Batch)

If the buffer is enabled in the batch control, the external pulse signal must be entered via the analogue/pulse input terminal or the INPUT terminal (see page 45 for their wiring diagrams). Either terminal can be used, however, when using the INPUT terminal, choose the "INPUT", "INP.T" and then "PULS" options in the user mode.

*If the buffer is disabled, the external signal via the INPUT terminal with the "INPUT", "INP.T" and then "B-S/S" options work as the start/stop signal of the batch control. See the diagram on page 26 for the behaviour. The current dosing is cancelled and the next dosing starts when another signal is inputted.

EXT mode setting

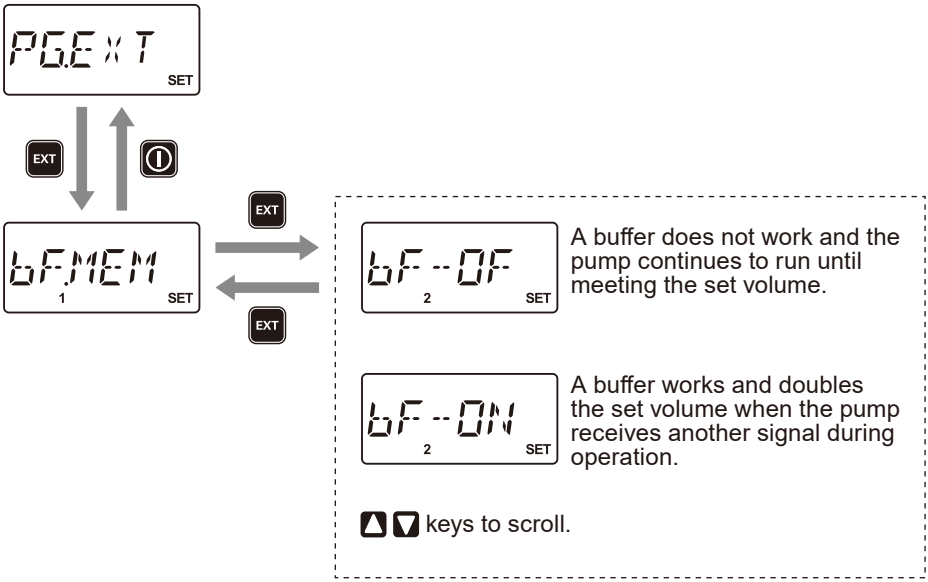

■ **Default setting**

The default flow rate at the SP2 (ANA.V/PLS mode) and 20mA (analogue output) can be changed.

1 **Press and hold the DISP key for 3 seconds in the wait state (MAN mode) to enter the TEST mode.**



2 **Push the start/stop key to start the pump and countdown. The pump runs at the maximum speed.**



3 **A default flow rate has been changed.**

The pump automatically returns to the wait state (MAN mode).



■ Out of measurement and Poor flow alarms (OUT1 & 2)

Available only with the combination of the pump and the EFS flow sensor. Allocate the out of measurement alarm (1.FL.ER or 2.FL.ER) or the poor flow alarm (1.F.CHK or 2.F.CHK) to the OUT1 and 2.

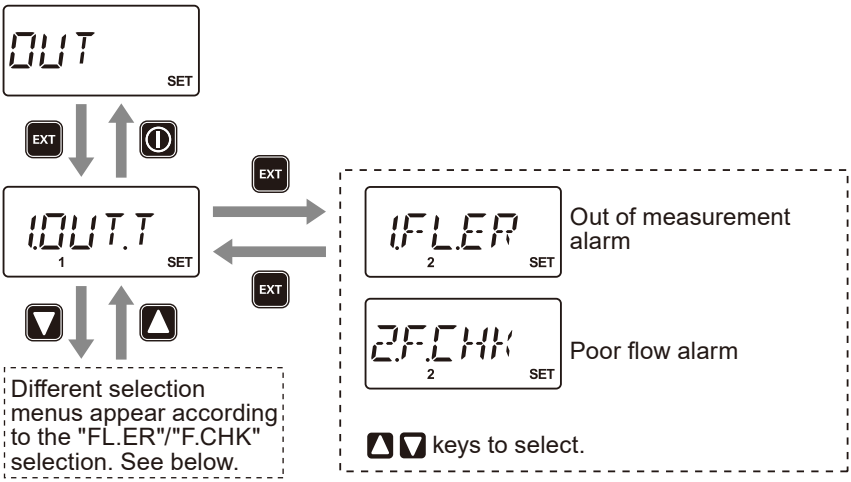

Out of measurement alarm setting (analog/pulse proportional control)

Available after the "1.FL.ER (or 2.FL.ER)" option is selected in the user mode. Set the allowable deviation (1.FLOW) and the delay time (1.OUT.D).

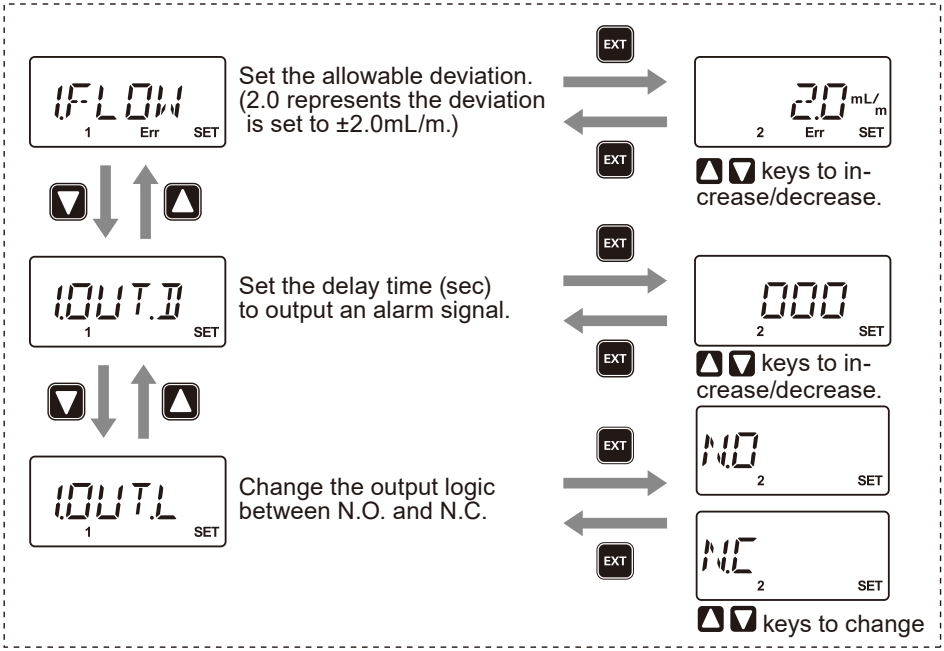

Poor flow alarm setting

Available after the "1.F.CHK (or 2.F.CHK)" option is selected. Set the alarm time (1.AL.TM) and select the pump on or off (1.ON-OF).

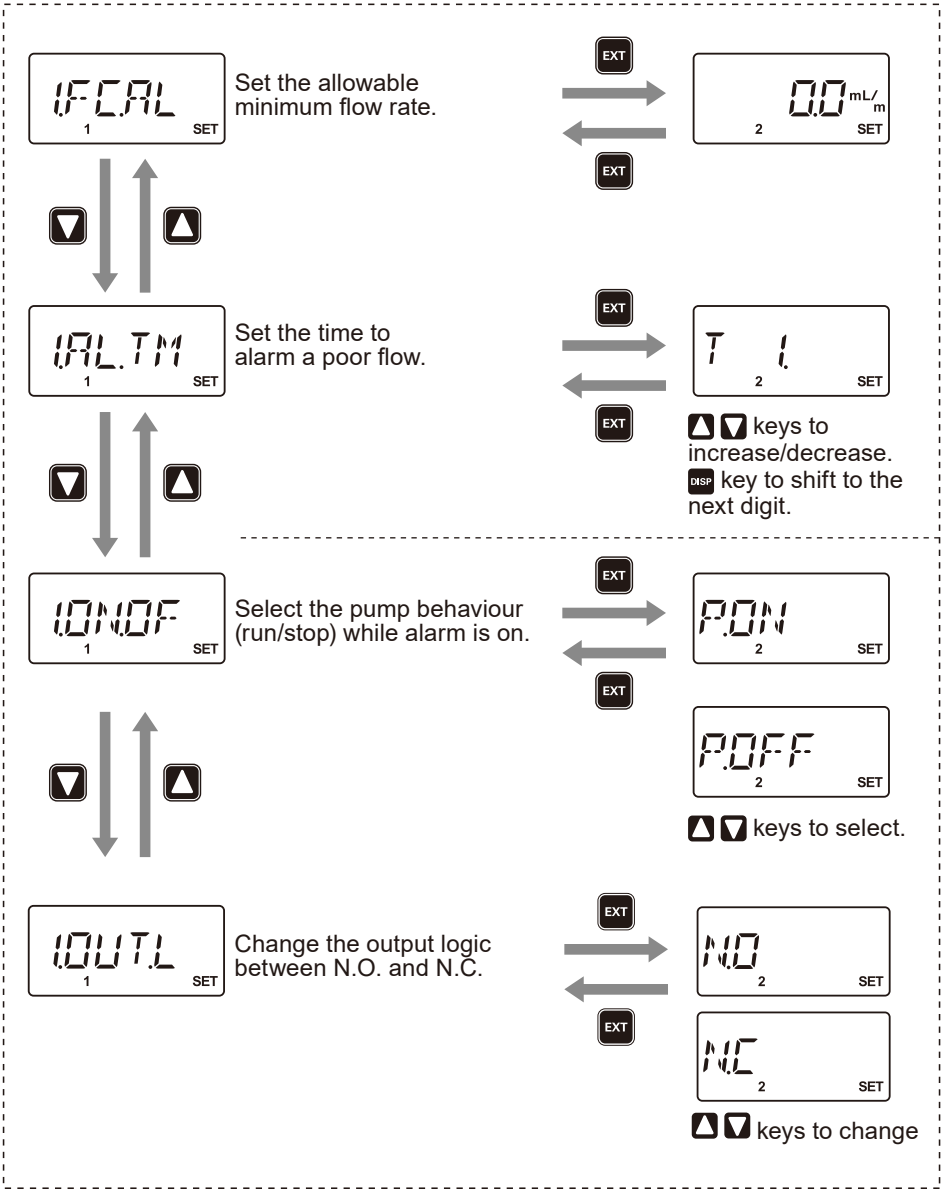

Maintenance

This section describes troubleshooting, inspection, wear part replacement, exploded views and specifications.

Important

- Follow instructions in this manual for replacement of wear parts. Do not disassemble the pump beyond the extent of the instructions.
- Always wear protective clothing such as an eye protection, chemical resistant gloves, a mask and a face shield during disassembly, assembly or maintenance work. The specific solution will dictate the degree of protection. Refer to SDS precautions from the solution supplier.
- Risk of electrical shock. Be sure to turn off power to stop the pump and related devices before service is performed.

Before unplugging the pump

Always stop the pump by key operation. And wait for three seconds before unplugging the pump. Otherwise, the last key operation to stop the pump may not be put in memory. In this case the pump unintentionally starts to run as powered on, discharging liquid.

NOTE

- It is not manufacturer's responsibility for material suitability for the liquid used in the field or any failure due to corrosion or erosion.
- Contact us or your nearest distributor for repair or contact a manufacturer of the host machine which our product is built in.
- Be sure to drain chemicals and clean the inside of the pump before return so that a harmful chemical does not spill out in transit.

Troubleshooting

First check the following points. If the following measures do not help remove problems, contact us or your nearest distributor.

States	Possible causes	Solutions
The pump does not run. (LED does not light. Blank screen.)	Power voltage is too low.	• Observe the allowable voltage range of 90-264VAC.
	The pump is not powered.	• Check the switch if it is installed. • Correct wiring. • Replace a breaking wire to new one.
Liquid can not be pumped up.	Air lock in the pump	• Expel air. See page 55.
	Air ingress through a suction line.	• Correct tubing.
	A valve set is installed upside down.	• Reinstall the valve set.
	Valve gaskets are not installed.	• Install valve gaskets.
	Foreign matters are stuck in the pump head valves.	• Dismantle, inspect and clean the valves. Replace as necessary.
	A ball valve is stuck on a valve seat.	• Dismantle, inspect and clean the valve. Replace as necessary.
The flow rate fluctuates.	Air stays in the pump head.	• Expel air. See page 55.
	Overfeeding occurs.	• Mount a check valve. See page 40.
	Foreign matters are stuck in the pump head valves.	• Dismantle, inspect and clean the valves. Replace as necessary.
	Diaphragm is broken.	• Replace diaphragm. See page 110.
	Pressure fluctuates at an injection point.	• Maintain a pressure constant at an injection point by optimizing piping or by relocating the point.
Liquid leaks.	Loose fit of the fitting or the air vent body	• Retighten them.
	Loose fit of the pump head	• Retighten the pump head. See page 53.
	O rings or valve gaskets are not installed.	• Install O rings and valve gaskets.
	Diaphragm is broken.	• Replace diaphragm. See page 110.
	Excessive discharge pressure	• Check that a discharge line is not closed. • Check if tubing is not clogged.

Error codes

Error codes will be shown when this product is in a faulty condition. See below for the meanings of error codes and countermeasures.

■ Error code information

Error codes	Possible causes	Descriptions	Error message is shown in:
Err1	Erroneous setting	The same current value/pulse rate or spm is set to both the set point 1 and 2 when setting analogue/pulse proportional control (ANA.V/PLS) or analogue output.	Err

■ Countermeasures

Error codes	Possible causes	Solutions
Err1 Erroneous setting	The error condition has been met.	Reset a current value or spm to the set point 1 or 2, so that the both points do not have the same value or spm.

■ Error display

The pump shows the "Err" display on its screen. The output activated for the occurrence of the error condition is identified as well.



Stands for the out 1 is active. If the icon is 2, it stands for the out 2 is activated.

Inspection

Perform daily and periodic inspection to keep pump performance and safety.

Daily inspection

Check the following points. If you notice any abnormal or dangerous conditions, suspend operation immediately and inspect/solve problems.
When wear parts come to the life limit, replace them with new ones. Contact us or your nearest distributor for detail.

No.	States	Points to be checked	How to check
1	Pumping	• If liquid is pumped.	Flow meter or visual inspection
		• If the suction and discharge pressure are normal.	Check specifications.
		• If liquid has deteriorated, crystallized or precipitated.	Visual or audio inspection
2	Noise and vibration	• If abnormal noise or vibration occurs. They are signs of abnormal operation.	Visual or audio inspection
3	Air ingress from pump head joints and a suction line	• If leakage occurs. • If pumped liquid includes air bubbles, check lines for leakage and retighten as necessary.	Visual or audio inspection

Periodic inspection

Retighten the pump head mounting bolts every three months evenly to the following torque in diagonal order.

*Mounting bolts may loosen in operation. How fast the bolts start to loosen is depending on operating conditions.

Tightening torque

Model code	Torque	Bolts
EWN-B09/-B11/-B16/-B21	2.16 N•m	M4 Hex. socket head bolt
EWN-B31	2.55 N•m	M4 Hex. socket head bolt
EWN-C16/-C21	2.16 N•m	M4 Hex. socket head bolt
EWN-C31	2.55 N•m	M4 Hex. socket head bolt
EWN-C36	2.55 N•m	M5 Hex. socket head bolt

*A hexagon wrench can be used for a torque wrench. See page 54.

Wear part replacement

To run the pump for a long period, wear parts need to be replaced periodically. It is recommended that the following parts are always stocked for immediate replacement. Contact us or your nearest distributor for detail.

Precautions

- Solution in the discharge line may be under pressure. Release the pressure from the discharge line before disconnecting plumbing or disassembly of the pump to avoid solution spray.
- Rinse wet ends thoroughly with tap water.
- Each time the pump head is dismantled, replace the diaphragm, O rings, valve gaskets and valve sets with new ones.

Wear part list

	Parts					# of parts	Estimated life
Pump	Valve set	VC/VH/VS/PC/PH/PS/TC	SH	FC	PC/P6	2 sets	8000 hours
		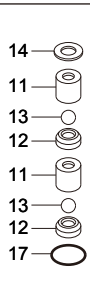	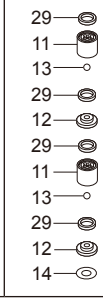	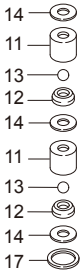	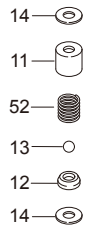		
	Diaphragm	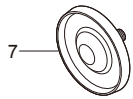				1	
	Automatic air vent valve set					1	

*The high pressure types have a rear diaphragm sheet on the back side of the diaphragm.
*Wear part duration varies with the pressure, temperature and characteristics of liquid.
*The estimated life is calculated based on the continuous operation with clean water at ambient temperature.

Before replacement

First release pressure from the pump head.

1 **Stop the pump operation.**

2 **Rotate the adjusting screw two revolutions anticlockwise to open the air vent port.**

NOTE

Do not rotate it three revolutions or more. Otherwise, the adjusting screw may come off with solution spray.

3 **Check that liquid comes out from the air vent port and gas/liquid pressure has been released.**

NOTE

The pressure may not be expelled completely as long as liquid does not come out. In this case run the pump until the pressure is released.

Valve set replacement

■ Discharge valve set disassembly/assembly

Necessary tools

- Adjustable wrench or spanner
- 21mm box wrench
- A pair of tweezers

*Unfix the pump base before disassembly.

1 **Loosen the fitting nut to remove a discharge tube and an air bleed tube.**

*Wash out residual liquid or substances.

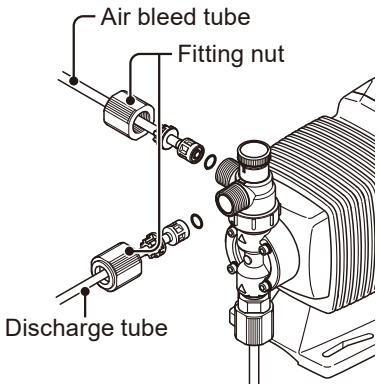

2 **Turn the lock nut anticlockwise by an adjustable wrench and remove the air vent body A.**

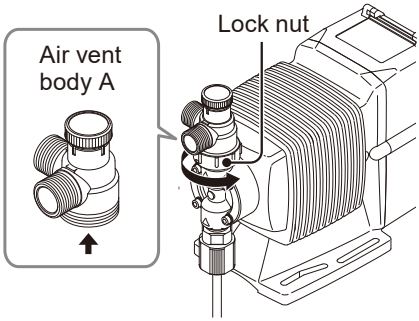

3 **Remove the air vent body B by the 21mm box wrench.**

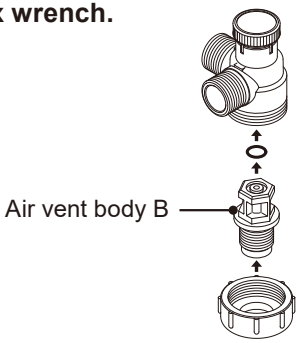

4 **Pull out the valve set by a pair of tweezers.**

5 **Place a new valve set into the pump head and screw the air vent body B through the lock nut.**

*Be careful not to misarrange the valve set or place it upside down. Otherwise, leakage or flow rate reduction may result.

*Do not forget to fit O rings and gaskets.

*Keep the valve set clean.

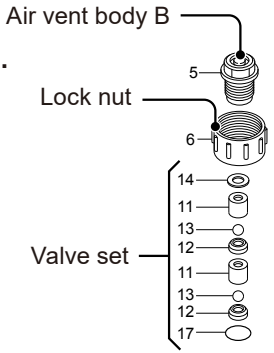

6 **Remount the air vent body A and connect tubes.**

■ Suction valve set disassembly/assembly

NOTE

Be careful not to drop the valve set.

1 **Remove the fitting nut and the suction tube.**

*Wash out residual liquid or substances.

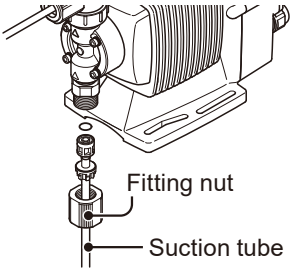

2 **Remove the fitting by an adjustable wrench or a spanner.**

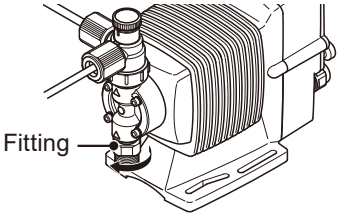

3 **Pull out the valve set by a pair of tweezers.**

4 **Hand-tighten the fitting with the valve set in it into the pump head as far as it will go. Retighten it by a further 1/4 turn with an adjustable wrench or a spanner.**

*Be careful not to misarrange the valve set or place it upside down. Otherwise, leakage or flow rate reduction may result.

*Do not forget to fit O rings and gaskets.

*Keep the valve set clean.

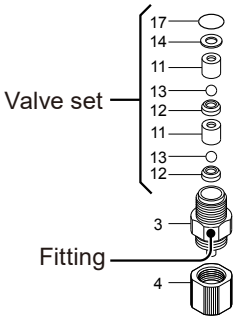

5 **Reconnect the suction tube.**

■ **Spacer set replacement (auto degassing type)**

1 **Loosen the lock nut and remove the fitting adapter.**

2 **Loosen the air vent body B and take it out of the pump head. Then pull out the spacer set.**

3 **Place a new spacer set into the pump head. Screw the air vent body B into the pump head through the lock nut.**

*Do not forget to fit O rings and gaskets.

*Keep the spacer set clean.

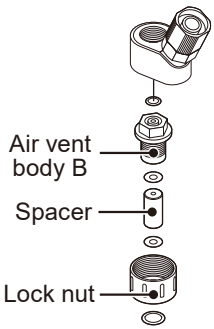

■ **Air vent valve set replacement (auto degassing type)**

1 **Loosen the fitting nut and remove an air bleed tube.**

*Be careful not to get wet with a residual chemical.

2 **Loosen and remove the fitting.**

3 **Take the air vent valve set out of the fitting adapter.**

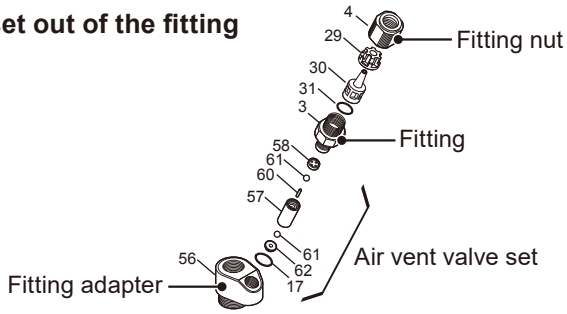

4 **Place a new air vent valve set into the fitting and then hand-tighten it into the fitting adapter as far as it will go. Retighten the fitting by a further 1/4 turn with a spanner.**

*Note the air vent valve set has a mounting direction.
Always mount the depressed end first.

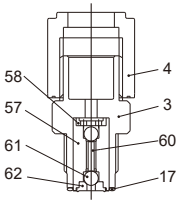

Diaphragm replacement

Necessary tools

- Adjustable wrench or spanner
- Hexagon wrench
- Torque wrench

NOTE

Pay attention not to loose diaphragm spacers. Always apply a proper number of diaphragm spacers. 0 or a few diaphragm spacers are inserted between the retainer and plunger for the adjustment of diaphragm location. Note that the number of diaphragm spacers varies with pump model.

1 **Run the pump and set the stroke length to 0%. Then stop the pump.**

2 **Loosen the fitting nuts and remove a suction tube, a discharge tube and an air bleed tube.**

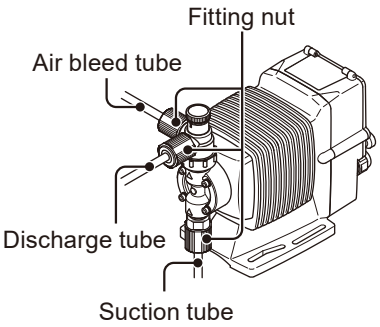

3 **Remove the pump head with a hexagon wrench.**

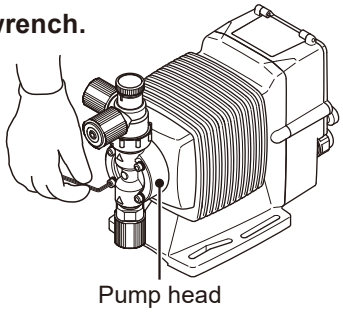

4 **Rotate and remove the diaphragm from the plunger (pump shaft).**

5 **Slide a retainer and diaphragm spacer(s) onto the screw of a new diaphragm.**

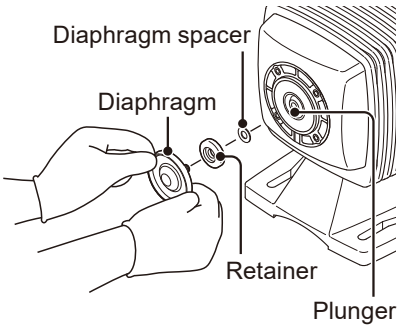

NOTE

- Fit the retainer to the diaphragm with its round edge to the diaphragm.
- Check that the bracket spacer is in place. Refit the bracket spacer into the bracket, combining mating parts as necessary.

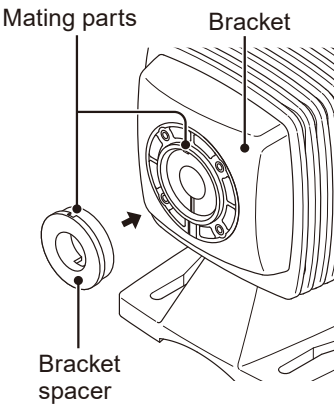

6 **Screw the new diaphragm into the plunger as far as it will go.**

*Be careful not to loose the retainer and diaphragm spacer.

7 **Run the pump and set the stroke length to 100%. Then stop the pump.**

8 **Mount the pump head.**

Tighten the pump head fixing bolts evenly to the following torque in diagonal order.

Tightening torque

Model code	Torque	Bolts
EWN-B09/-B11/-B16/-B21	2.16 N•m	M4 Hex. socket head bolt
EWN-B31	2.55 N•m	M4 Hex. socket head bolt
EWN-C16/-C21	2.16 N•m	M4 Hex. socket head bolt
EWN-C31	2.55 N•m	M4 Hex. socket head bolt
EWN-C36	2.55 N•m	M5 Hex. socket head bolt

*A hexagon wrench can be used for a torque wrench. See page 54.

Pump head, Drive unit & Control unit

The pump in the diagram below is completely dismantled. Do not dismantle the pump beyond the extent shown in this instruction manual.

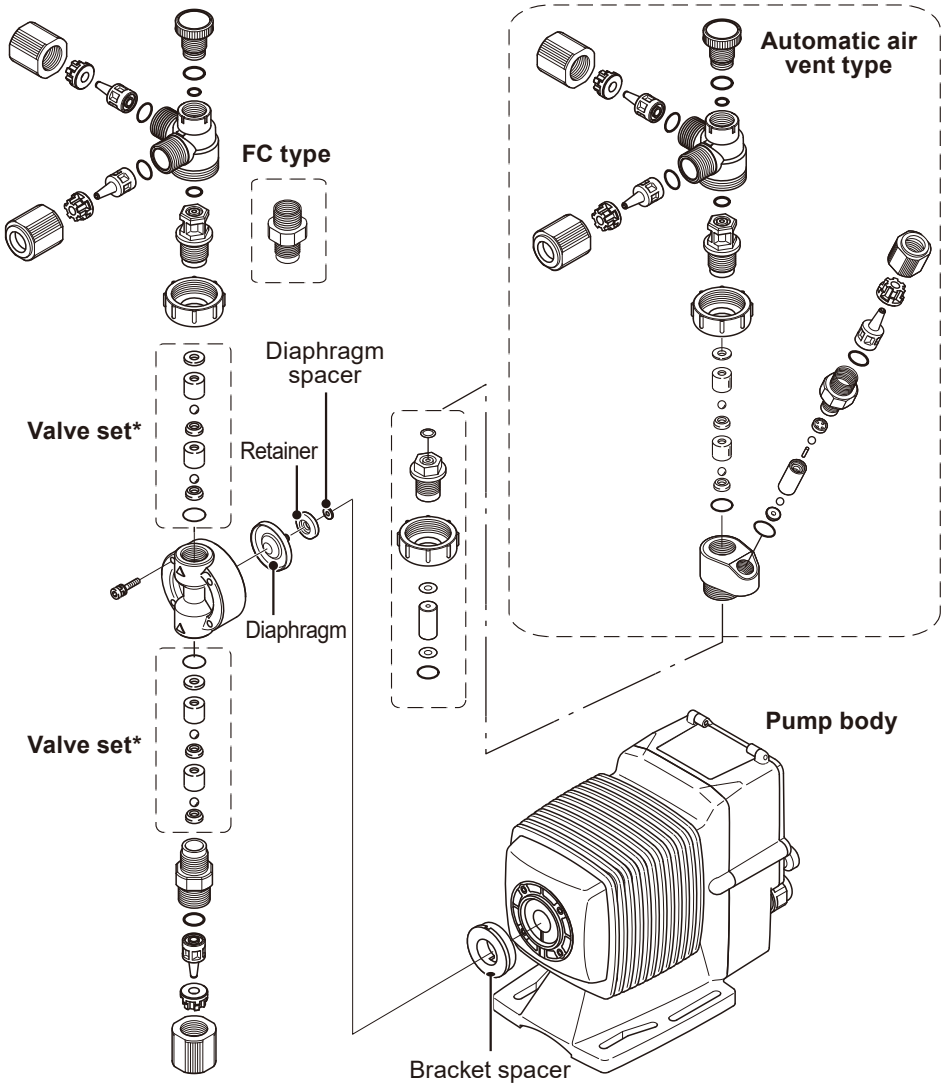

*Wet end materials and their sizes differ with models.

Pump head

■ EWN VC/VH/VS/PC/PH/PS/TC

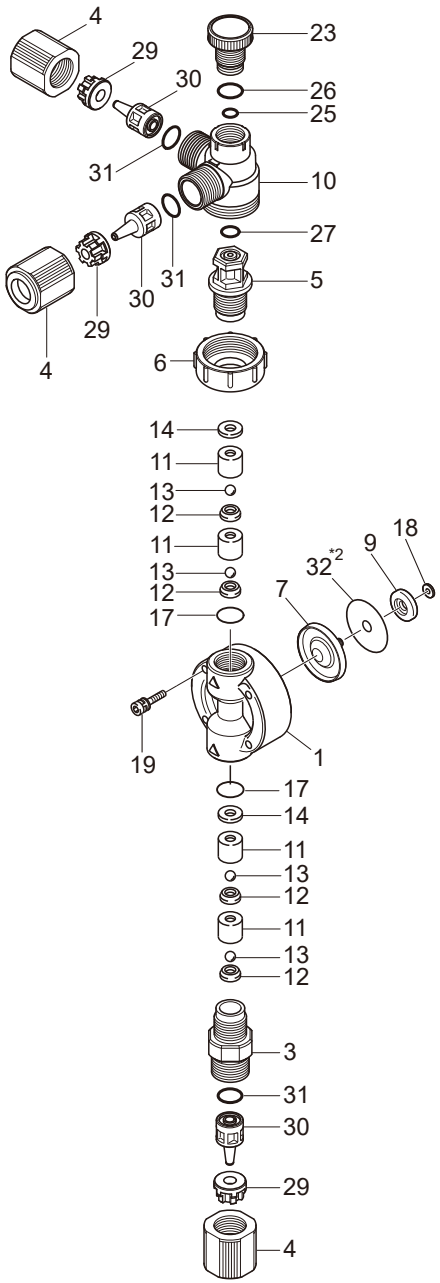

No.	Part names	# of parts
1	Pump head	1
3	Fitting	1
4	Fitting nut	3
5	Air vent body B	1
6	Lock nut	1
7	Diaphragm	1
9	Retainer	1
10	Air vent body A	1
11	Valve guide	4
12	Valve seat	4
13	Valve	4
14	Valve gasket	2
17	O ring	2
18	Diaphragm spacer	*1
19	Hex. socket head bolt [PW•SW]	4
23	Adjusting screw	1
25	O ring	1
26	O ring	1
27	O ring	1
29	Hose stopper	3
30	Hose adaptor	3
31	O ring	3
32	Rear diaphragm seat*2	1

*1The number of diaphragm spacers varies with pump model.

*2For the PC-H/PH-H types, a rear diaphragm sheet is placed between the parts 7 and 9.

■ EWN FC

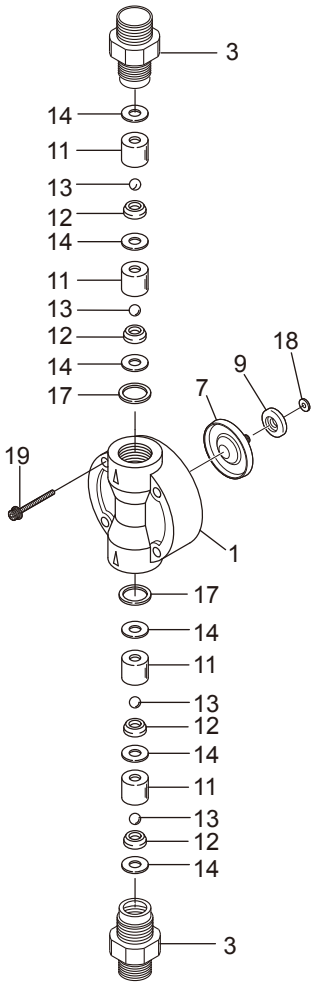

No.	Part names	# of parts
1	Pump head	1
3	Fitting	2
7	Diaphragm	1
9	Retainer	1
11	Valve guide	4
12	Valve seat	4
13	Valve	4
14	Valve gasket	6
17	O ring	2
18	Diaphragm spacer	*
19	Hex. socket head bolt [PW•SW]	4

*The number of diaphragm spacers varies with pump model.

■ EWN SH

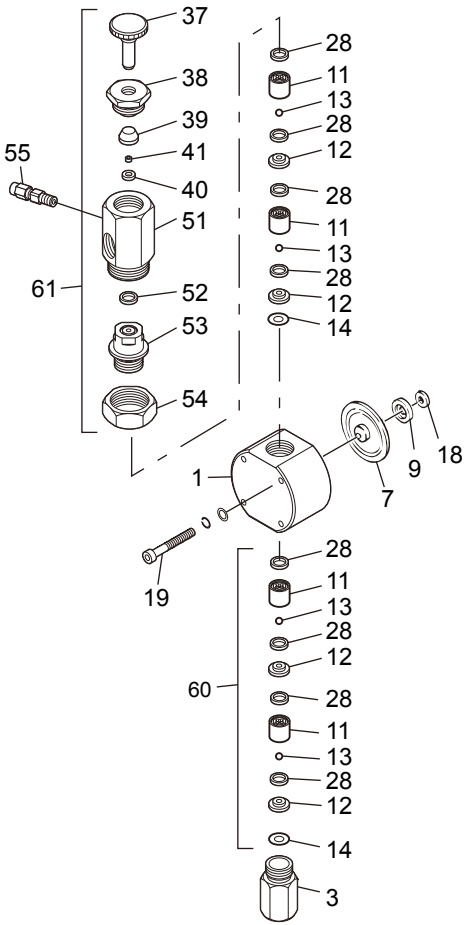

No.	Part names	# of parts
1	Pump head	1
3	Fitting	1
7	Diaphragm	1
9	Retainer	1
11	Valve guide	4
12	Valve seat	4
13	Valve	4
14	Valve gasket B	2
18	Diaphragm spacer	*
19	Hex. socket head bolt [PW•SW]	4
28	Valve gasket A	8
37	Adjusting screw	1
38	Seal nut	1
39	Seal ring	1
40	Seat	1
41	Seat ring	1
51	Air vent body A	1
52	Gasket	1
53	Air vent body B	1
54	Nut	1
55	Male connector	1

*The number of diaphragm spacers varies with pump model.

■ EWN-C31 PC-V/P6-V

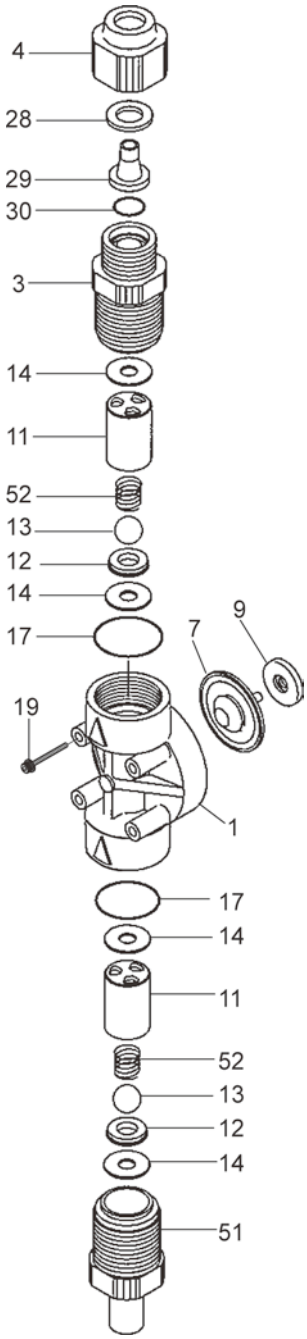

No.	Part names	# of parts
1	Pump head	1
3	Fitting	1
4	Fitting nut	1
7	Diaphragm	1
9	Retainer	1
11	Valve guide	4
12	Valve seat	4
13	Valve	4
14	Valve gasket	2
17	O ring	2
18	Diaphragm spacer	*
19	Hex. socket head bolt [PW•SW]	4
28	Hose stopper	1
29	Hose adapter	1
30	O ring	1
51	Inlet	1
52	Valve spring	2

*The number of diaphragm spacers varies with pump model.

■ EWN-B11/-B16/-C16/-C21 VC-A/VH-A

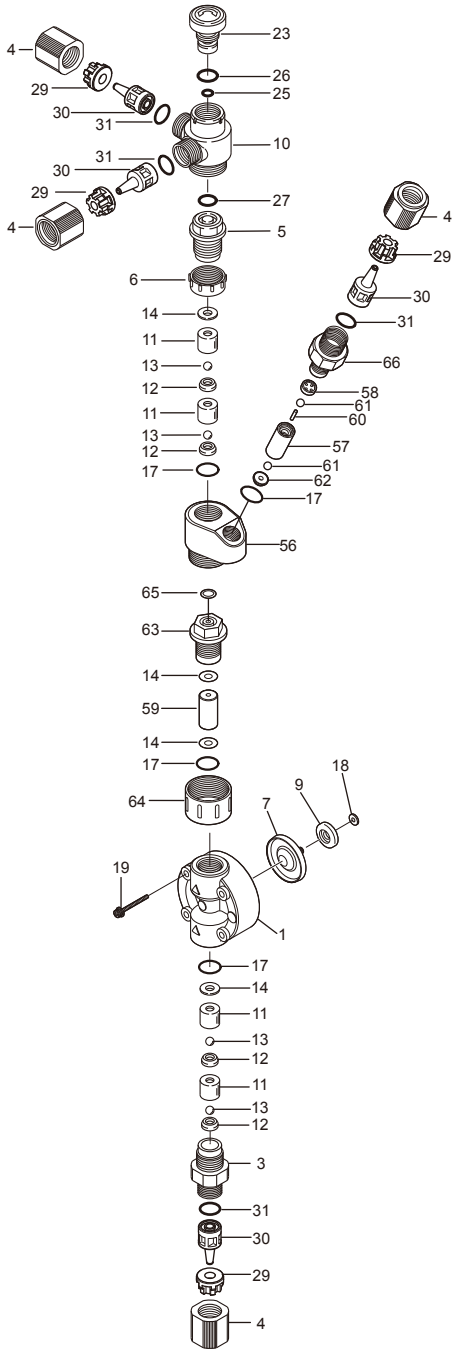

No.	Part names	# of parts
1	Pump head	1
3	Fitting	1
4	Fitting nut	4
5	Air vent body B	1
6	Lock nut	1
7	Diaphragm	1
9	Retainer	1
10	Air vent body A	1
11	Valve guide	4
12	Valve seat	4
13	Valve	4
14	Valve gasket	4
17	O ring	4
18	Diaphragm spacer	1
19	Hex. sock. cap bolt [PW•SW]	4
22	Diaphragm seal	1
23	Adjusting screw	1
24	Name plate	1
25	O ring	1
26	O ring	1
27	O ring	1
29	Hose stopper	4
30	Hose adapter	4
31	O ring	4
56	Fitting adapter	1
57	Air vent valve guide A	1
58	Air vent valve guide B	1
59	Spacer	1
60	Separate pin	1
61	Valve	2
62	Valve seat	1
63	Air vent body B	1
64	Lock nut	1
65	O ring	1
66	Air vent fitting	1

Specifications

Information in this section is subject to change without notice.

■ Pump unit

VC/VH/VS/PC/PH/PS

Model code	Max. output capacity L/H (mL/min)	Max. rated discharge pressure MPa	Stroke length % (mm)	Stroke rate % (spm)	Average current A	Average power cons. W	Weight kg
EWN-B11	2.3 (38)	1.0	50-100 (0.5-1.0)	0.1-100 (1-360)	0.8	20	2.5
EWN-B16	3.9 (65)	0.7					
EWN-B21	6.0 (100)	0.4					
EWN-B31	12.0 (200)	0.2					
EWN-C16	4.8 (80)	1.0	40-100 (0.5-1.25)		1.2	24	3.5
EWN-C21	7.8 (130)	0.7					
EWN-C31	16.2 (270)	0.35					
EWN-C36	25.2 (420)	0.2					

TC/FC/SH

Model code	Max. output capacity L/H (mL/min)	Max. rated discharge pressure MPa	Stroke length % (mm)	Stroke rate % (spm)	Average current A	Average power cons. W	Weight kg
EWN-B11	2.3 (38)	1.0	50-100 (0.5-1.0)	0.1-100 (1-360)	0.8	20	2.5
EWN-B16	3.9 (65)	0.7					
EWN-B21	6.0 (100)	0.4					
EWN-B31	12.0 (200)	0.2					
EWN-C16	4.8 (80)	1.0	40-100 (0.5-1.25)		1.2	24	3.5
EWN-C21	7.8 (130)	0.7					
EWN-C31	16.2 (270)	0.35					
EWN-C36	24.6 (410)	0.2					

VC-C/VH-C (high compression type)

Model code	Max. output capacity L/H (mL/min)	Max. rated discharge pressure MPa	Stroke length % (mm)	Stroke rate % (spm)	Average current A	Average power cons. W	Weight kg
EWN-B09	0.7 (12)	1.0	50-100 (0.625-1.25)	0.1-100 (1-180)	0.8	20	2.5
EWN-B11	1.4 (23)	1.0					
EWN-B16	2.4 (40)	0.7					
EWN-B21	3.8 (63)	0.4					
EWN-C16	3.2 (54)	1.0	40-100 (0.6-1.50)		1.2	24	3.5
EWN-C21	4.7 (78)	0.7					

PC-H/PH-H/SH-H (high pressure type)

Model code	Max. output capacity L/H (mL/min)	Max. rated discharge pressure MPa	Stroke length % (mm)	Stroke rate % (spm)	Average current A	Average power cons. W	Weight kg
EWN-B11	1.5 (25)	1.7	50-100 (0.5-1.0)	0.1-100 (1-240)	0.8	20	2.5
EWN-C16	2.4 (40)	1.7	40-100 (0.5-1.25)		1.2	24	3.5

PC-V/P6-V (high viscosity type)

Model code	Max. output capacity L/H (mL/min)	Max. rated discharge pressure MPa	Stroke length % (mm)	Stroke rate % (spm)	Average current A	Average power cons. W	Weight kg
EWN-C31	9.0 (150)	0.5	40-100 (0.5-1.25)	0.1-100 (1-240)	1.2	24	3.7

VC-A/VH-A (auto degassing type)

Model code	Max. output capacity L/H (mL/min)	Max. rated discharge pressure MPa	Stroke length % (mm)	Stroke rate % (spm)	Average current A	Average power cons. W	Weight kg
EWN-B11	1.8 (30)	1.0	50-100 (0.5-1.0)	0.1-100 (1-360)	0.8	20	2.9
EWN-B16	3.3 (55)	0.7					
EWN-C16	3.9 (65)	1.0	40-100 (0.5-1.25)		1.2	24	3.8
EWN-C21	6.6 (110)	0.7					

*Maximum output capacity is rated with clean water at ambient temperature at maximum discharge pressure (also, stroke length 100%, at stroke rate 100% and rated voltage). Output may increase as pressure decreases.
*Allowable room temperature: 0-40°C
*Allowable ambient humidity: 30-90%RH (non-condensing in the controller)
*Allowable liquid temperature: -10 - 40°C (-10 - 60°C for the PC/PH/PS/TC/FC/SH)
*Allowable power voltage deviation: ±10% of the rated range
*Maximum altitude: 2000m
*Pollution degree: 2
*Weight of the EWN-B SH type is 3.6kg and EWN-C SH is 4.5kg.
*For the PC-V/P6-V types, their flow rates were collected with clean water. The rates may change depending on liquid viscosity, and therefore are not guaranteed.
*Maximum noise level: 70dB at 1m (A scale)

■ Control unit

Functions	Operation mode	EXT (operation with EXT setting)
		MAN (operation at manual speed)
		Feedback control (operation with the EFS)
	Mode selection	EXT key, START/STOP key
Keypad		START/STOP, EXT, UP, DOWN, DISP
Control functions	Batch control	Operation with the EFS and set volume per pulse
	Digital control	n (1-9999) shots per signal (n = multiplier) n (1-9999) signals per shot (n = divisor)
	Analogue control	ANA.R (analogue rigid): 4-20/20-4/0-20/20-0mA ANA.V (analogue variable): Set point 1 and 2
	Pulse control[*1]	PLS: Set point 1 and 2
	MAN operation	Operation at a MAN speed from 0.1%(/1spm) to 100.0%(/360spm). A push of the start/stop key or the STOP signal input runs/stops the pump.
	Feedback control	Operation with the EFS and a target flow rate.
	STOP	Operation stop at contact input[*2]
	Interlock	Operation stop at contact input[*2]
	Degassing	Max spm operation by pressing the UP and DOWN keys
	Keypad lock	Keypad lock and release
Monitors	LCD	14×5 backlit LCD indicates information such as operating conditions and units.
	LED	ON Green/Orange ×1 Lights orange as powered on. Lights green while ready for operation Flashes green during operation STOP Red/Orange ×1 Lights red at STOP signal input Lights orange at Pre-STOP signal input OUT Red ×1 Flashes at each output
Input	Pulse	No voltage contact or Open collector[*3]
	Analogue	0-20mA
	STOP/Pre-STOP	No voltage contact or Open collector[*3]
	AUX	No voltage contact or Open collector[*3]
	Interlock	No voltage contact or Open collector[*3]
	Batch Start/Stop	No voltage contact or Open collector[*3]

Output	OUT1	No voltage contact (mechanical relay) 250VAC, 3A(resistance load) Enable or disable the alarms of the STOP, Pre-STOP, Interlock, Batch/MULT operation completion, Out of measurement and Poor flow Factory default (STOP)
	OUT2	No voltage contact (photoMOS) 24VAC/DC 0.1A Enable or disable the alarms of the STOP, Pre-STOP, Interlock, Batch/MULT operation completion, Out of measurement and Poor flow or Synchronous output*5 (sensor/pump) Factory default (OFF)
	Analogue	4-20mA
	Power voltage (EFS)	24VDC±10% at 100mA
Buffer		Nonvolatile memory
Power voltage*4		100-240VAC 50/60Hz

*1 Maximum allowable pulse rate is 500Hz (duty cycle of 50%).
*2 Operation resumption at contact input is also settable.
*3 The maximum applied voltage is 12V at 2.3mA. The minimum application load should be 2.3mA or below when using a relay.
*4 Observe the allowable voltage range of 90-264VAC. Otherwise failure may result.
*5 Pulse wave form of the synchronous output (pulse factor: 0.025mL/p, max frequency: 200Hz, fixed ON time: 2.5ms, minimum OFF time: 2.5ms)

■ European power cable

Cross section area	0.75 [mm^2], 3-Conductor (L/N/PE)	Standard	H03VV-F
Length	2000 [mm]	Terminal end	European plug

■ Australian power cable

Cross section area	1.0 [mm^2], 3-Conductor (L/N/E)	Standard	H05VV-F AS3191
Length	2000 [mm]	Terminal end	Australian plug

■ Pump colour

Blue	Munsell colour system 7.5PB 3/8
Red	Munsell colour system 5R 3/10

Outer dimensions

■ EWN-B11/-B16/-B21/-C16/-C21 VC/VH/PC/PH

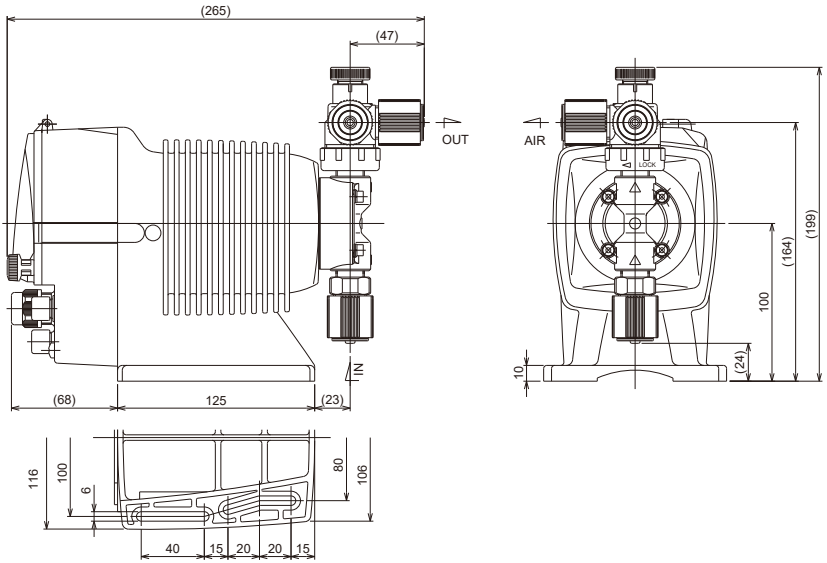

■ EWN-B31/-C31 VC/VS/PC/PS

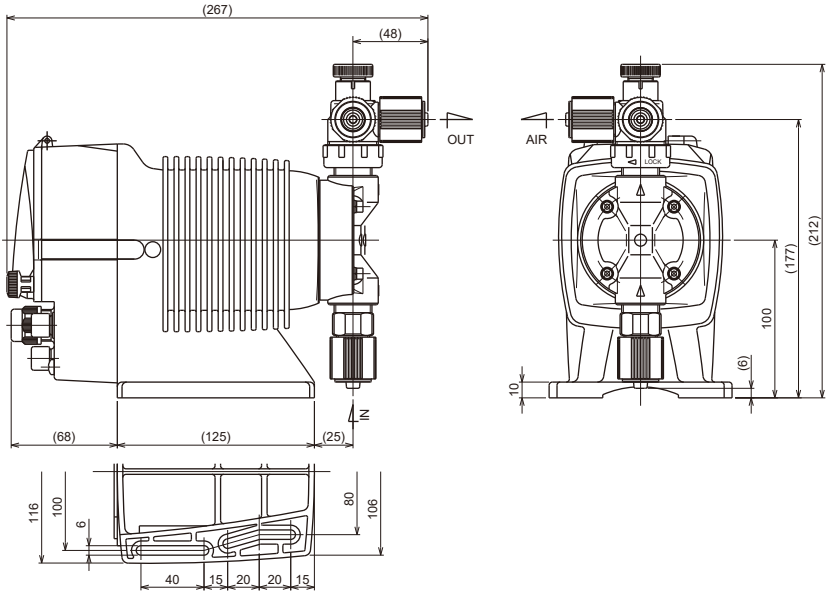

■ EWN-C36 VC/VS/PC/PS

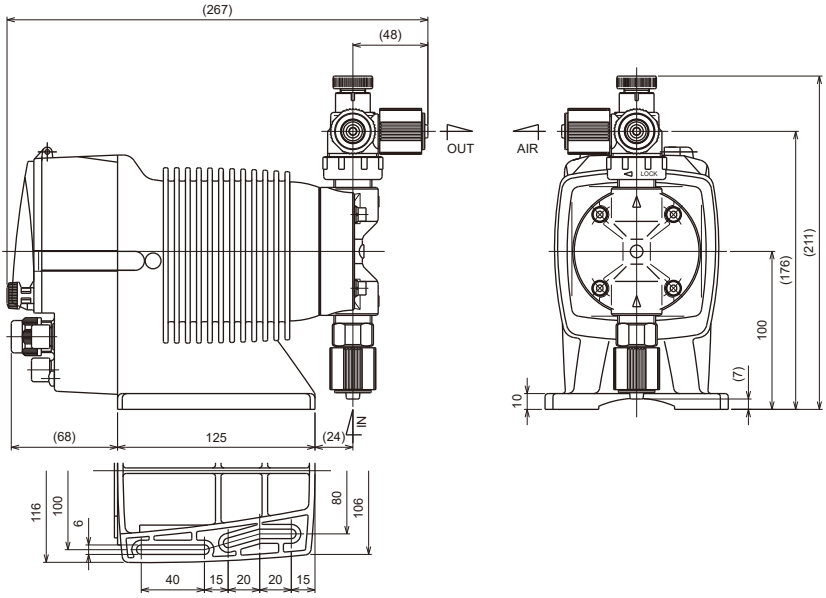

■ EWN-B11/-B16/-B21/-C16/-C21 FC

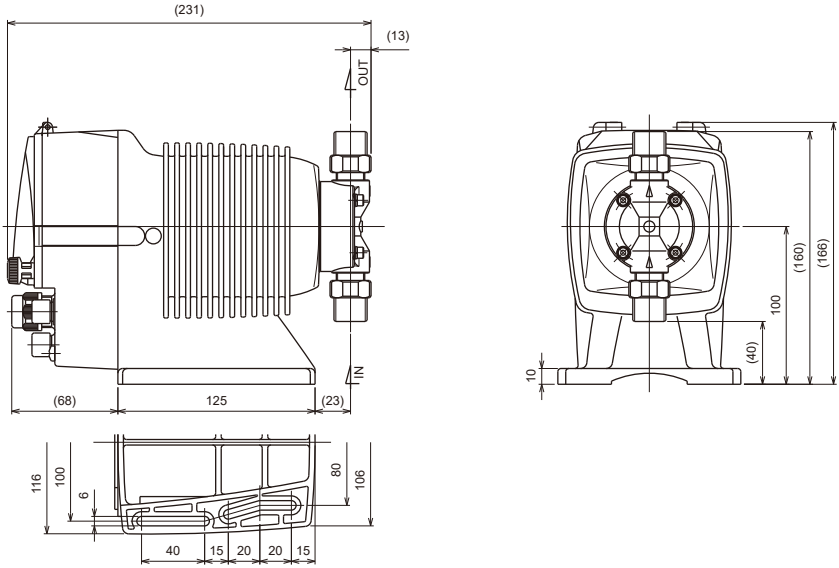

■ EWN-B31/-C31 FC

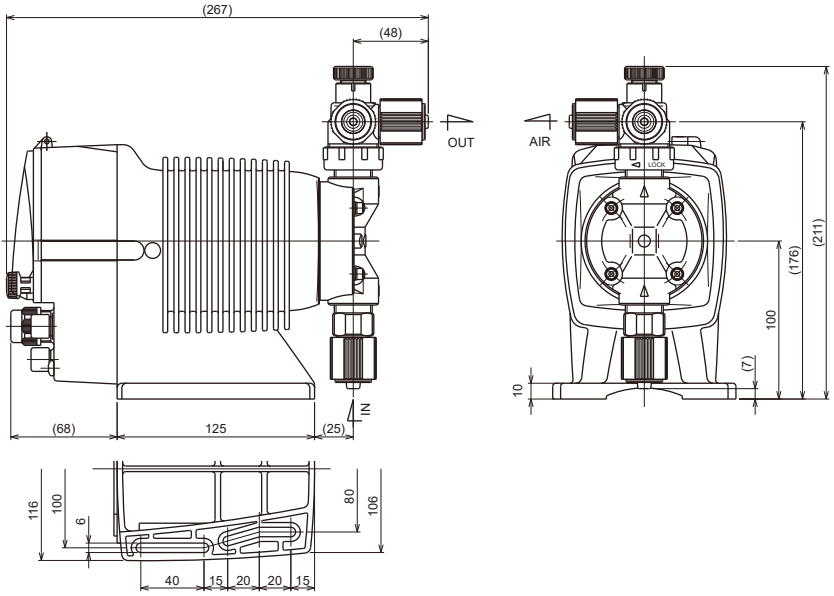

■ EWN-C36 FC

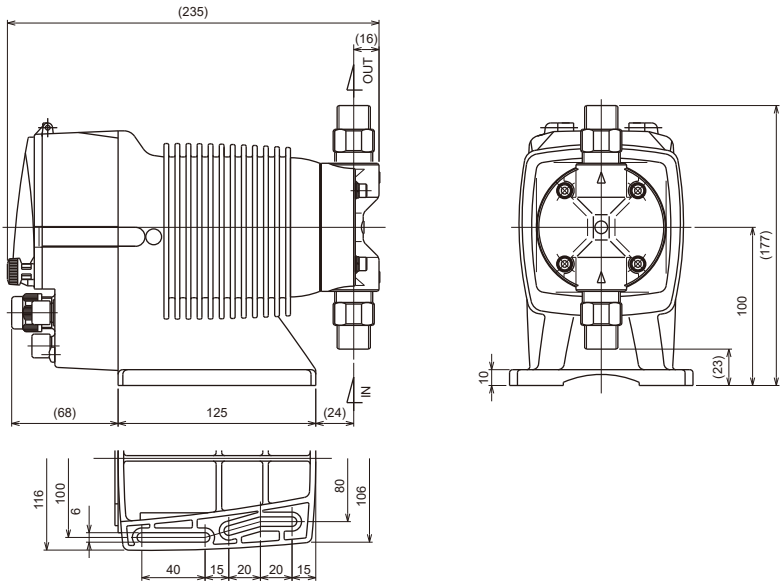

■ EWN-B11/-B16/-B21/-C16/-C21 TC

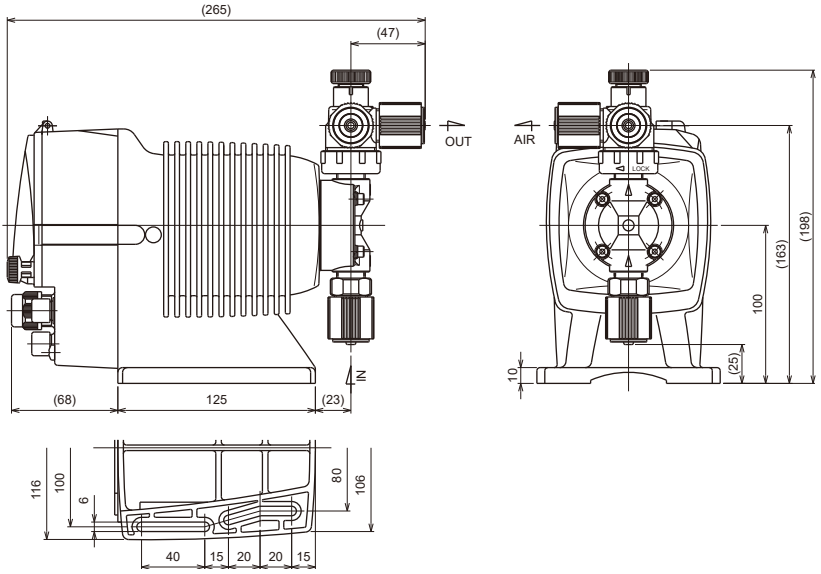

■ EWN-B31/-C31 TC

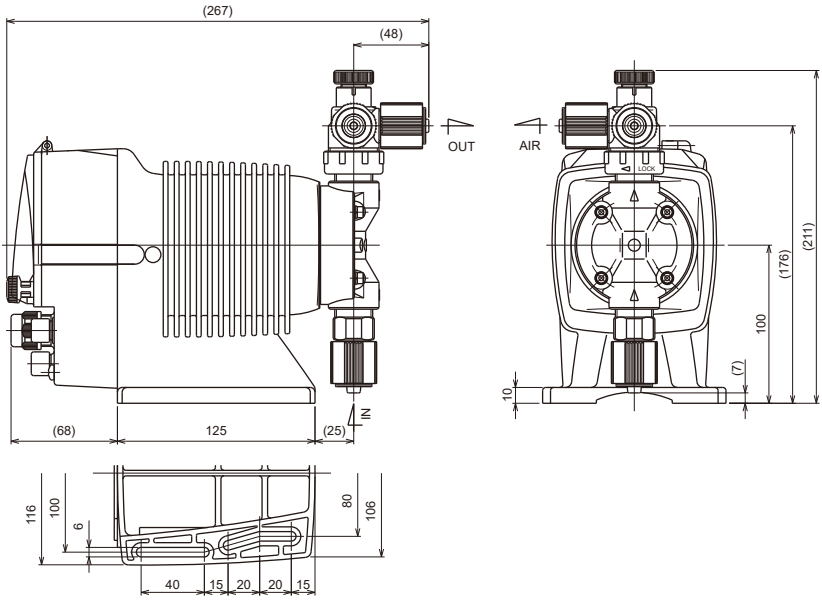

■ EWN-C36 TC

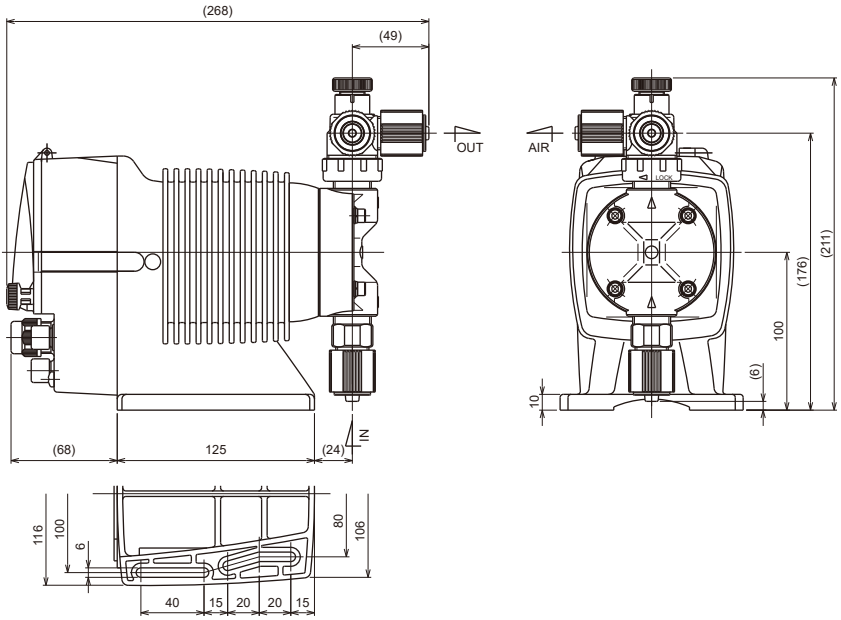

■ EWN-B11/-B16/-B21/-C16/-C21 SH

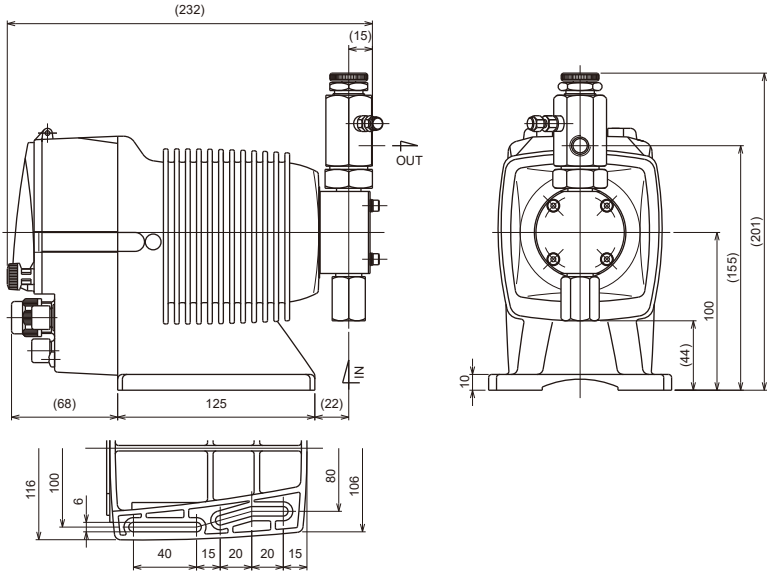

■ EWN-B31/-C31 SH

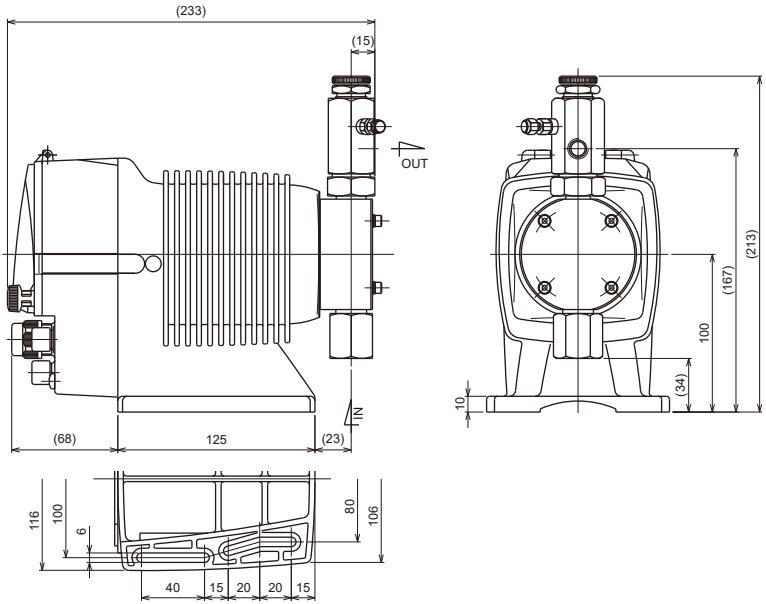

■ EWN-C36 SH

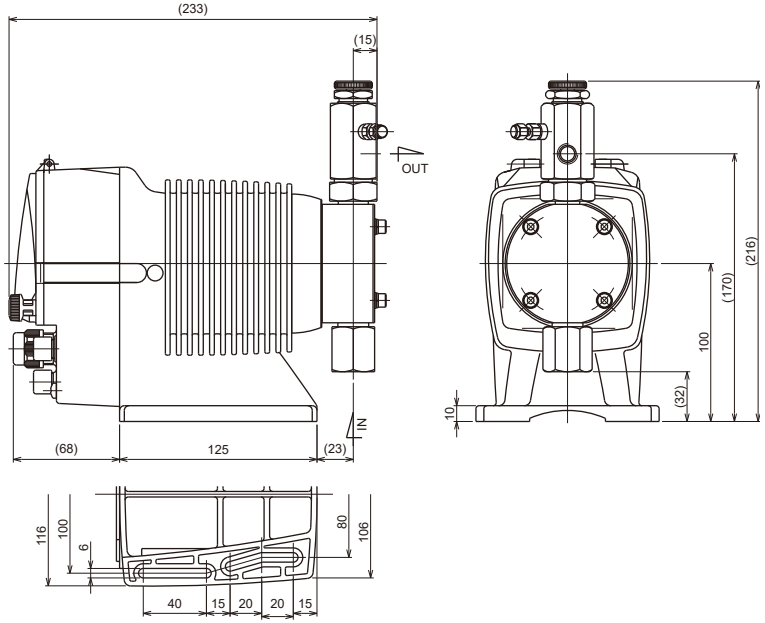

■ EWN-B11/-B16/-B21/-C16/-C21 VC-C/VH-C (high compression type)

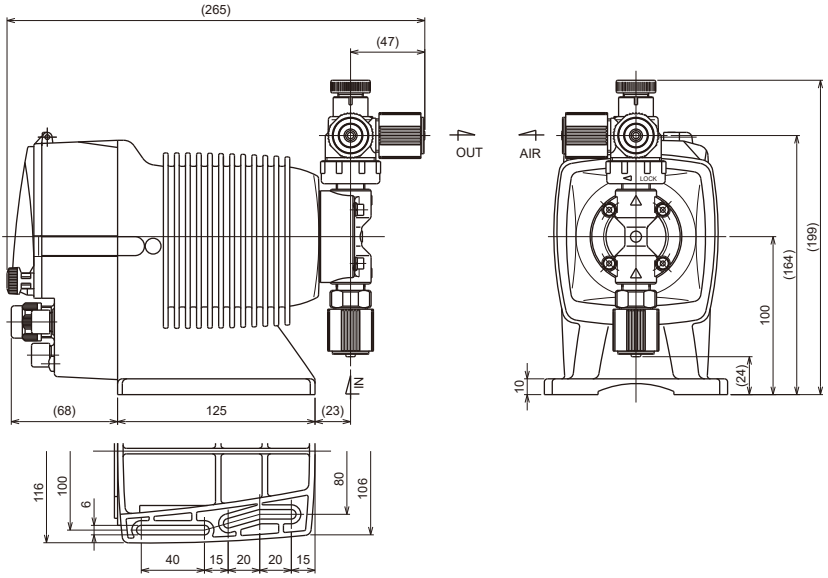

■ EWN-B11 PC-H/PH-H (high pressure type)

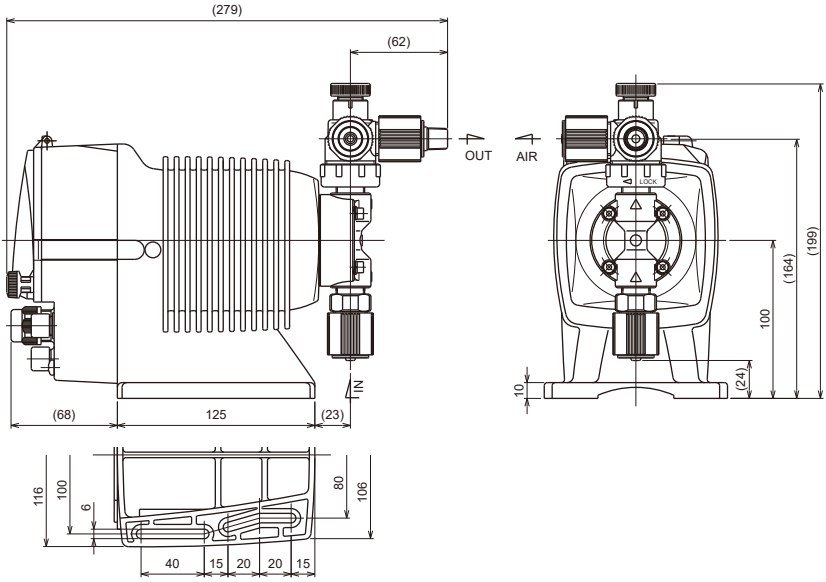

■ EWN-C16 PC-H/PH-H (high pressure type)

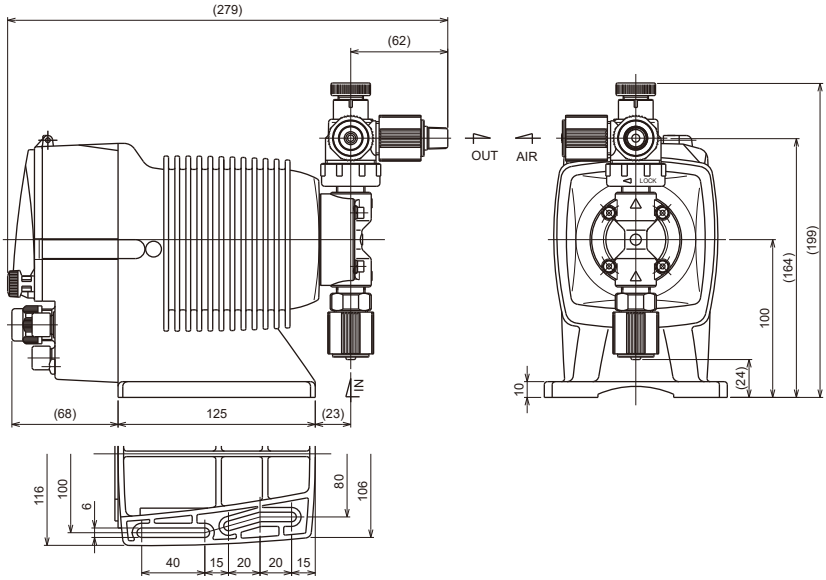

■ EWN-B11/-C16 SH-H (high pressure type)

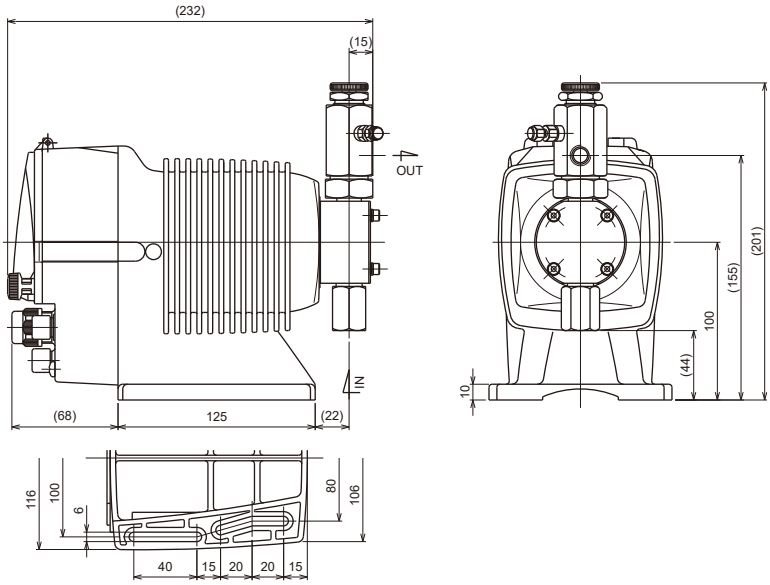

■ EWN-C31 PC-V/P6-V (high viscosity type)

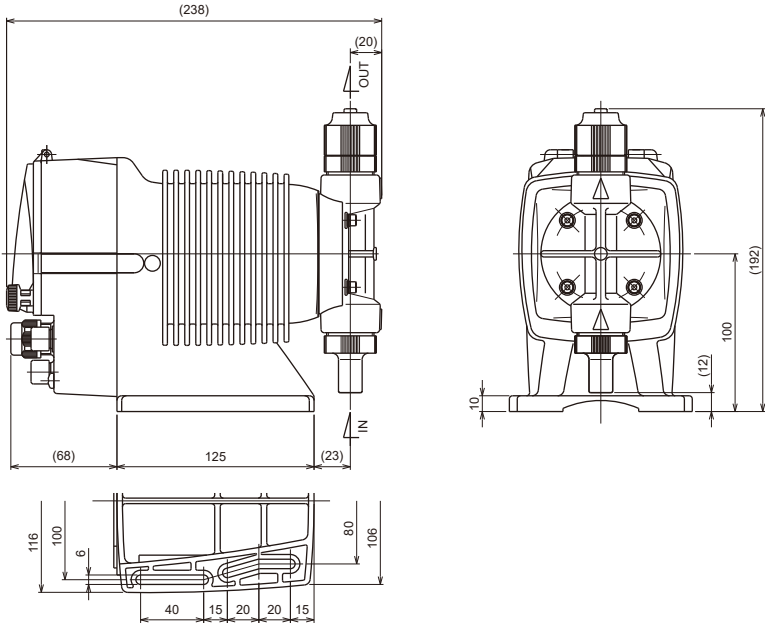

■ EWN-B11/-B16 (auto degassing type)

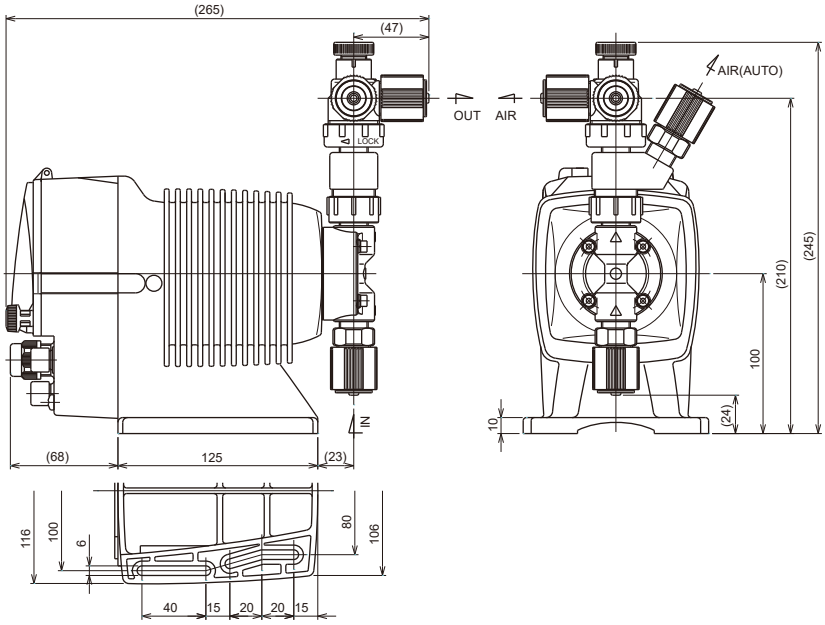

■ EWN-C16/-C21 (auto degassing type)

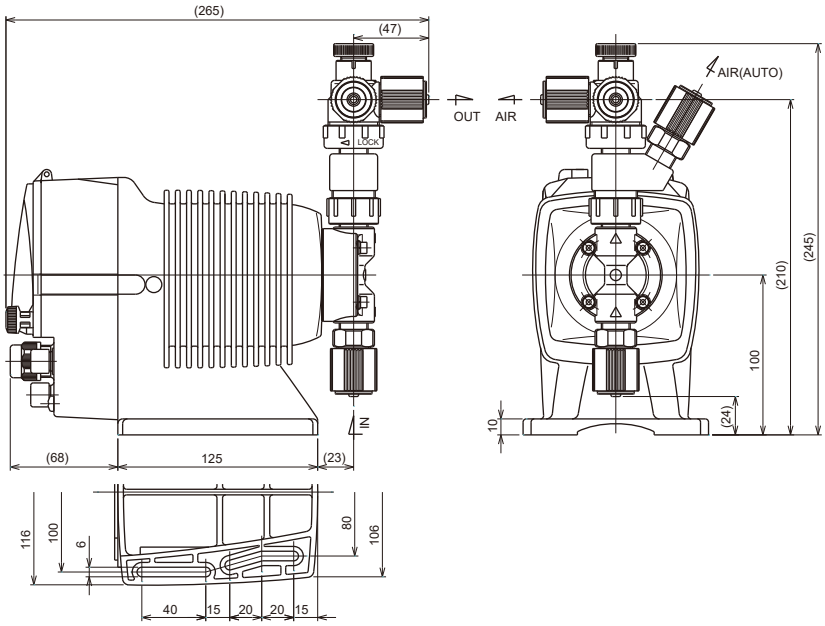

EC DECLARATION OF CONFORMITY

A copy of the original Declaration of Conformity

(SUPPLIER'S NAME)

WE

IWAKI CO.,LTD.

(ADDRESS)

6-6 2-CHOME KANDA-SUDACHO CHIYODA-KU TOKYO JAPAN

(PRODUCT)

DECLARE UNDER OUR SOLE RESPONSIBILITY THAT THE PRODUCTS

ELECTROMAGNETIC METERING PUMP

(MODEL NAME)

EWN SERIES

TO WHICH THIS DECLARATION RELATES ARE IN CONFORMITY
WITH THE FOLLOWING STANDARDS OR DIRECTIVES AS FAR AS APPLICABLE

(DIRECTIVES)

MACHINERY DIRECTIVE 2006/42/EC (ANNEX IIA)
EMC DIRECTIVE 2014/30/EU
RoHS DIRECTIVE 2011/65/EU

(STANDARDS)

EN ISO12100:2010 EN61000-6-2:2005 EN IEC63000:2018
EN809:1998+A1:2009 EN61000-6-3:2007+A1:2011

(A PERSON WHO IS AUTHORISED TO COMPILE THE TECHNICAL FILE
IN THE COMMUNITY)

IWAKI EUROPE GMBH
SIEMENSRING 115 D-47877 WILLICH GERMANY

NOTE: THIS DECLARATION BECOMES INVALID IF TECHNICAL OR OPERATIONAL MODIFICATIONS ARE INTRODUCED WITHOUT THE MANUFACTURER'S CONSENT.

T. Sawada.

TSUTOMU SAWADA
DEPUTY SENIOR GENERAL MANAGER,
QUALITY ASSURANCE HEAD OFFICE

Tokyo, Sep. 2, 2021

(PLACE AND DATE OF ISSUE) **(NAME AND SIGNATURE OR EQUIVALENT MARKING OF AUTHORIZED PERSON)**

DOCUMENT NO. IS-51K-520-3

UK DECLARATION OF CONFORMITY

A copy of the original Declaration of Conformity

(SUPPLIER'S NAME)

WE

IWAKI CO.,LTD.

(ADDRESS)

6-6 2-CHOME KANDA-SUDACHO CHIYODA-KU TOKYO JAPAN

(PRODUCT)

DECLARE UNDER OUR SOLE RESPONSIBILITY THAT THE PRODUCTS

ELECTROMAGNETIC METERING PUMP

(MODEL NAME)

EWN SERIES

TO WHICH THIS DECLARATION RELATES ARE IN CONFORMITY WITH THE FOLLOWING REGULATIONS OR STANDARDS AS FAR AS APPLICABLE

(REGULATIONS)

S.I. 2008/1597 SUPPLY OF MACHINERY (SAFETY)
S.I. 2016/1091 ELECTROMAGNETIC COMPATIBILITY
S.I. 2012/3032 RESTRICTION OF HAZARDOUS SUBSTANCES

(STANDARDS)

EN ISO12100:2010 EN61000-6-2:2005 EN IEC63000:2018
EN809:1998+A1:2009 EN61000-6-3:2007+A1:2011

(A PERSON WHO IS AUTHORISED TO COMPILE THE TECHNICAL FILE IN THE GB MARKET)

SENSYS LIMITED
UNIT 9 POND CLOSE WALKERN ROAD
STEVENAGE HERTS SG1 3QP UK

NOTE: THIS DECLARATION BECOMES INVALID IF TECHNICAL OR OPERATIONAL MODIFICATIONS ARE INTRODUCED WITHOUT THE MANUFACTURER'S CONSENT.

T. Sawada.

TSUTOMU SAWADA
DEPUTY SENIOR GENERAL MANAGER,
QUALITY ASSURANCE HEAD OFFICE

Tokyo, Sep. 6, 2021

(PLACE AND DATE OF ISSUE) **(NAME AND SIGNATURE OR EQUIVALENT MARKING OF AUTHORIZED PERSON)**

DOCUMENT NO. IS-51K-585

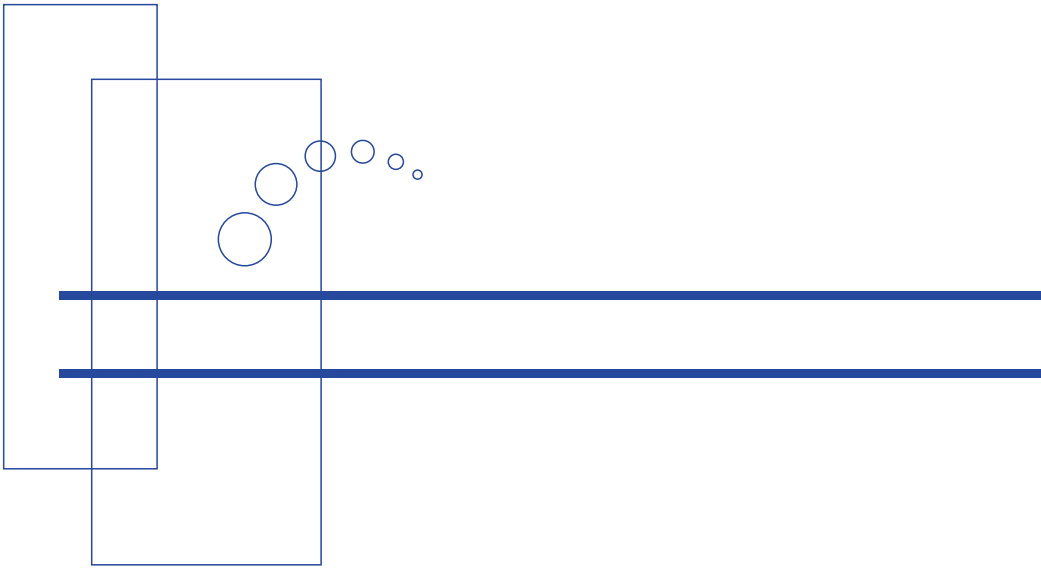

https://www.iwakipumps.jp

IWAKI CO.,LTD. 6-6 Kanda-Sudacho 2-chome Chiyoda-ku Tokyo 101-8558 Japan
TEL: +81 3 3254 2935 FAX: +81 3 3252 8892

European Headquarter / IWAKI Europe GmbH
TEL: +49 2154 9254 0 FAX: +49 2154 9254 48

Germany / IWAKI Europe GmbH
TEL: +49 2154 9254 50 FAX: +49 2154 9254 55

The Netherlands / IWAKI Europe GmbH (Netherlands Branch)
TEL: +31 74 2420011 FAX: +49 2154 9254 48

Italy / IWAKI Europe GmbH (Italy Branch)
TEL: +39 0445 561219 FAX: +39 0445 569088

Spain / IWAKI Europe GmbH (Spain Branch)
TEL/FAX: +34 934 741 638

Poland / IWAKI Europe GmbH (East Europe Branch)
TEL: +48 12 347 0755 FAX: +48 12 347 0900

Denmark / IWAKI Nordic A/S
TEL: +45 48 242345

Finland / IWAKI Suomi Oy
TEL: +358 10 201 0490

Norway / IWAKI Norge AS
TEL: +47 23 38 49 00

Sweden / IWAKI Sverige AB
TEL: +46 8 511 72900

Belgium / IWAKI Belgium N.V.
TEL: +32 13 670200 FAX: +32 13 672030

France / IWAKI France S.A.
TEL: +33 1 69 63 33 70 FAX: +33 1 64 49 92 73

U.S.A. / IWAKI America Inc.
TEL: +1 508 429 1440 FAX: +1 508 429 1386

Brazil / IWAKI Do Brasil Comercio De Bombas Hidraulicas LTDA.
TEL/FAX: +55 19 3244 5900

China (Shanghai) / IWAKI Pumps (Shanghai) Co., Ltd.
TEL: +86 21 6272 7502 FAX: +86 21 6272 6929

China (Hong Kong) / IWAKI Pumps Co., Ltd.
TEL: +852 2607 1168 FAX: +852 2607 1000

China (Guangzhou) / GFTZ IWAKI Engineering & Trading Co., Ltd.
TEL: +86 20 84350603 FAX: +86 20 84359181

China (Shenzhen) / IWAKI Pumps (Shenzhen) Co., Ltd.
TEL: +86 0755 8656 3696

Singapore / IWAKI Singapore Pte Ltd.
TEL: +65 6316 2028 FAX: +65 6316 3221

Indonesia / IWAKI Singapore Pte Ltd. (Indonesia Office)
TEL: +62 21 6906606 FAX: +62 21 6906612

Malaysia / IWAKIm SDN. BHD.
TEL: +60 3 7803 8807 FAX: +60 3 7803 4800

Korea / IWAKI Korea Co., Ltd.
TEL: +82 2 6238 4800 FAX: +82 2 6238 4801

Taiwan / IWAKI Pumps Taiwan Co., Ltd.
TEL: +886 2 8227 6900 FAX: +886 2 8227 6818

Thailand / IWAKI (Thailand) Co., Ltd.
TEL: +66 2 322 2471 FAX: +66 2 322 2477

Australia / IWAKI Pumps Australia Pty Ltd.
TEL: +61 2 9899 2411 FAX: +61 2 9899 2421

T755-10 '26/09