Iwaki
Pneumatic Drive Bellows Pump
FW-H series

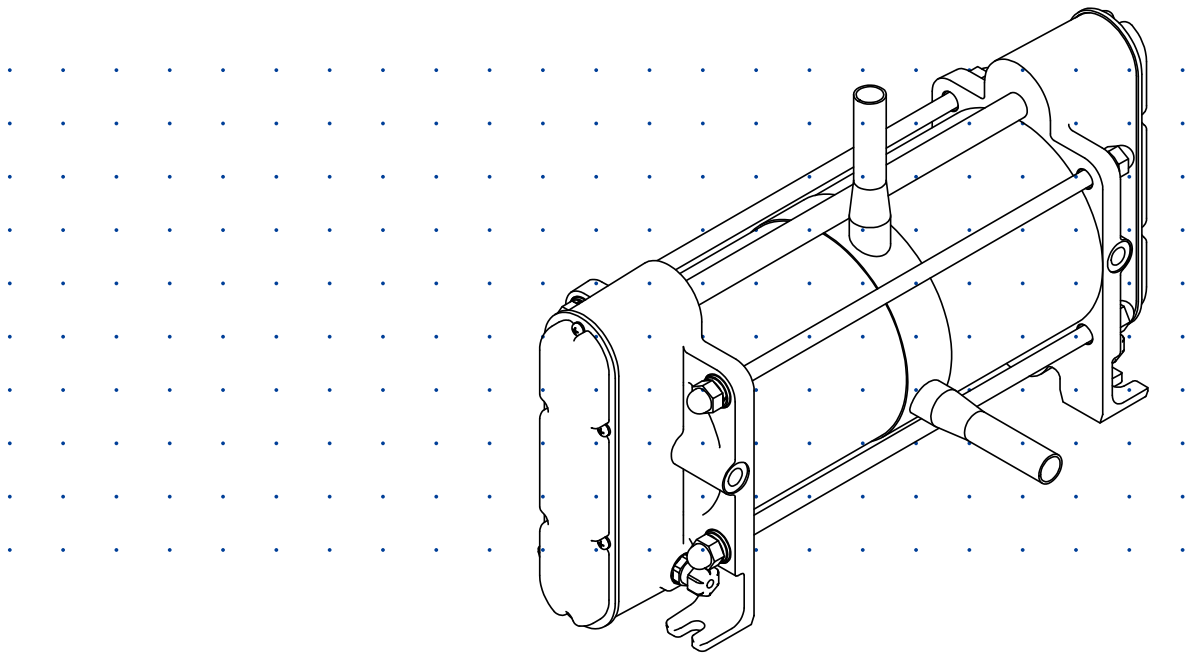

Instruction manual

Thank you for choosing our product.

⚠ Please read through this instruction manual before use.

This instruction manual describes important precautions and instructions for the product. Always keep it on hand for quick reference.

©2011 IWAKI CO., LTD.

Order confirmation

Open the package and check that the product conforms to your order. If any problem or inconsistency is found, immediately contact your distributor.

a. Check if the delivery is correct.

Check the nameplate to see if the information such as model codes are as ordered.

*Electrical wiring changes with the controllers.



*The CE/UKCA markings on our product(s) are for us to market the product(s) into the European Union market / the Great Britain (England, Wales and Scotland) market, however, the CE/UKCA markings do not ensure any safety or conformity of the product(s) outside the EU/GB markets.
When the pump is incorporated into the equipment marketed in the EU/GB markets, such equipment must meet all the requirements of applicable directives/regulations. In such a case, any person who places the equipment on the markets must carry CE/UKCA marks on the equipment as a manufacturer.

b. Check if the required number of accessories is provided.

<Attached accessories>

A FDC-1 controller and two quick exhaust valves

c. Check if the delivery is damaged or deformed.

Check for transit damage and loose bolts.

Contents

Order confirmation **2**

Safety instructions 5

WARNING **6**
CAUTION **7**
Precautions for use **9**

Overview 10

Introduction **10**
Pump structure & Operating principle 10
Part names **11**
Pump 11
Operating conditions **12**
Pump stroke 12
Supply air pressure range 12
Liquid temperature range 12
Liquid characteristics 12
Do not run the pump with the following liquid 12
Use care handling the following liquid: 12
Operation and Stoppage 13
During operation 13
When stopping the pump 13
During stoppage 13
Air exhaust port 13
Leak sensors 13
Ambient temperature 13
Pump surface temperature 13
Noise from pump 13
Identification codes **14**

Installation 15

Pump mounting **15**
Liquid line piping **17**
Suction line 18
Flooded suction 18
Filtration (suction line end) 18
When installing a valve on the suction line: 18
Discharge line 19
Pulsation reduction 19
When installing a valve on the discharge line: 19
Filtration (circulation) 19
Filtration (discharge line end) 19

Depressurization at pump stop 19
Degassing 20
Air line piping 21
Supply air port I.D. 21
Air line piping diagram 22
Composite effective cross-sectional area 24
Effective cross-sectional area 24
Preventive measures against condensation 24
Electric wiring 25
Installation 25
Lead wires 25
Extension of leak sensor wires 25
Installation of proximity switch wires 25
Extension of proximity switch wires 25
Wiring diagram 26
Operation 27
Before operation 27
Pump operation 28
Starting the pump 28
Flow rate adjustment 29
Stoppage 29
Maintenance 30
Troubleshooting 30
Inspection 33
Daily inspection 33
Periodic inspection 33
Wear part list 34
Specification/Outer dimension 35
Specification 35
FW-20 H T 1 or 2 35
FW-40 H T 1 or 2 35
Outer dimension 36
FW-20 H T 1 36
FW-20 H T 2 36
FW-40 H T 1 37
FW-40 H T 2 37
Part names 38
FW-20 H T 1 38
FW-20 H T 2 39
FW-40 H T 1 40
FW-40 H T 2 41
EC DECLARATION OF CONFORMITY 42
UK DECLARATION OF CONFORMITY 43

Safety instructions

Read through this section before use. This section describes important information for you to prevent personal injury or property damage.

■ Symbols

In this instruction manual, the degree of risk caused by incorrect use is noted with the following symbols. Please pay attention to the information associated with the symbols.

⚠ **WARNING**	**Indicates mishandling could lead to a fatal or serious accident.**
⚠ **CAUTION**	**Indicates mishandling could lead to personal injury or property damage.**

A symbol accompanies each precaution, suggesting the use of "Caution", "Prohibited actions" or specific "Requirement".

Caution marks



Prohibited marks



Requirement marks



⚠Export Restrictions

Technical information contained in this instruction manual might be treated as controlled technology in your countries, due to agreements in international regime for export control.
Please be reminded that export license/permission could be required when this manual is provided, due to export control regulations of your country.

⚠WARNING


Requirement

Turn off power before work
Risk of electrical shock. Be sure to turn off power to stop the pump and related devices before service is performed. Let other people know about the situation by displaying a notice such as "POWER OFF (Maintenance)" near the power switch.


Requirement

Confirm safety in your working area
Keep away from the pump when turning on the system power. Ensure that no personnel are in the vicinity of the pump or related equipment before turning on the system (including solenoid valves, PLCs, and other devices). The pump itself does not have an ON/OFF switch and starts operating when power is supplied to the system.


Requirement

Stop operation
If you notice any abnormal or dangerous conditions, suspend operation immediately and inspect/solve problems.


Prohibited

Do not use the pump in any condition other than its intended purpose
The use of the pump in any conditions other than those clearly specified may result in failure or injury. Use this product in specified conditions only.


Do not remodel

Do not modify the pump
Alterations to the pump carry a high degree of risk. It is not the manufacturer's responsibility for any failure or injury resulting from alterations to the pump.


Wear protectors

Wear protective clothing
Always wear protective clothing such as an eye protection, chemical resistant gloves, a mask and a face shield during disassembly, assembly or maintenance work. The specific solution will dictate the degree of protection. Refer to SDS precautions from the solution supplier.


Requirement

Spill precautions
Ensure protection and containment of solution in the event of plumbing or pump damage (secondary containment). In the event of liquid leakage, dispose of the leaked chemical solution properly in accordance with local rules and regulations.


Caution

Do not touch the pump or pipe with bare hands
Risk of burns. The surface temperature of the pump or piping becomes very high during and immediately after operation, depending on the liquid temperature.


Prohibited

Do not remove covers
Do not remove any covers including the right-and-left cylinder head covers during operation in order to reduce the risk of personal injury.


Requirement

Depressurize piping before disassembly
Release a pressure from both liquid and air lines before dismantling the pump or removing piping.

⚠CAUTION


Requirement

Qualified personnel only
The pump should be handled or operated by qualified personnel with a full understanding of the pump. Any person not familiar with the product should not take part in the operation or maintenance of the pump.


Prohibited

Use specified power only
Do not use any power other than that specified for the proximity switch. Otherwise, failure or fire may result.


Requirement

Ventilation
Fumes or vapours can be hazardous with certain solutions. Ensure proper ventilation at the operation site.


Prohibited

Do not install or store the pump:
- In a flammable atmosphere (except for explosion-proof models).
- In a dusty/humid environment.
- In a corrosive atmosphere.


Prohibited

Do not stand on the pump
Injury or damage may result when the pump turns over.


Requirement

Flushing before operation
Flush the inside of the pump and piping with pure water or the liquid to be delivered before the start of operation.


Requirement

Do not run the pump with the following liquid:
- Liquid that easily crystallizes
- Slurry
- Low conductivity hydrocarbon liquid


Requirement

Use care handling the following liquid:
- Stripper (the pump must be in explosion proof.)
- Solvent
- Hydrazine
- Fuming sulfuric acid


Requirement

Static electricity
When low electric conductivity liquids such as ultra-pure water are handled, the static electricity may be generated in the pump and may cause static discharge. Take countermeasures to remove the static electricity.



Before transportation

Be sure to drain any remaining chemicals from the pump and thoroughly flush the inside of the pump with water. Seal the inlet and outlet of the pump before transporting the pump to prevent leakage.



Observe the maximum stroke rate

Operating the pump above the maximum stroke rate specified in the Specifications section may shorten bellows life. Configure the control sequence to prevent the pump from exceeding the specified stroke rate, even during dry running, such as during liquid replacement.



Disposal of a used pump

Dispose of any used or damaged pump in accordance with local rules and regulations. If necessary, consult a licensed industrial waste disposal company.



Ambient temperature

Use this product at an ambient temperature between 0°C and 40°C.



Before stopping the pump

- Release the discharge-side pressure. Failure to do so may deform the bellows.
- Do not close any valves immediately after stopping the pump. The resulting surge pressure may deform the bellows or the connecting plate.



When the pump is stopped

- Do not supply air to both the right and left air-supply ports simultaneously. Doing so may deform the bellows.
- Do not leave the pump unused for an extended period with chemicals remaining in the bellows. Some chemicals may permeate the bellows and corrode metal parts.



Air exhaust port

Do not restrict the air exhaust port (for example, by using tubing with a smaller I.D.). Residual pressure in the pump may deform the bellows.



During pump operation

Make sure all the valves on both suction and discharge side piping are open.



Note on the electrode

The electrode may not detect leakage under certain operating conditions. For details, contact us.

Precautions for use

- During transit:
  –Do not hit/wet the package.
  –Do not place the package lateral/up side down.
  –Keep the package dry.
  –Do not stack the package on top of another.



- Electrical work should be performed by a qualified electrician. Otherwise, personal injury or property damage could result.



- Allow sufficient space around the pump for easy access and maintenance.



- Use care handling the pump. Do not drop. An impact may affect pump performance. Do not use a pump that has been damaged to avoid the risk of electrical damage or shock.

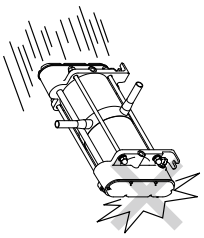

- The pump and controller are not waterproof. Do not operate the pump and controller while wet with solution or water. Failure or injury may result. Immediately dry off the pump and controller if they get wet.



- Do not close discharge line during operation. Solution may leak or piping may break.



- Solution in the discharge line may be under pressure. Release the pressure from the discharge line before disconnecting plumbing or disassembly of the pump to avoid solution spray.



- Wear protective clothing when handling or working with pumps. Consult solution SDS for appropriate precautions. Do not come into contact with residual solution.



- Do not leave the pump with any chemical in the bellows for a long period. Some chemical gas can penetrate the bellows and corrode metal parts. Run the pump for ten minutes a day for replacing gas when the pump is going to be suspended two or three days.



- In accordance with the European Directive 2012/19/EU on waste electrical and electronic equipment (WEEE), this product features the crossed-out wheelie bin symbol. When this product is disposed of in household wastes, toxic components included in it can cause major environmental and human health problems. Use appropriate waste collection systems for recovery and recycling. Contact your local distributor or nearest Iwaki company for the detailed collection systems.

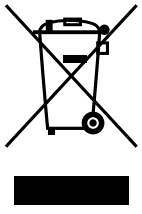

Overview

Pump characteristics, features and part names are described in this section.

Introduction

Pump structure & Operating principle

An Iwaki FW-H series pneumatic drive bellows pump has fluoric wet ends and is designed for semiconductor manufacturing processes.

Principle of operation

The pump unit has two air chambers and a pair of bellows. The reciprocating motion of the bellows in the air chambers introduces/delivers solution.

Suction process

Either bellows takes in solution via the inlet as it expands.

Discharge process

The bellows lets out solution via the inlet as it contracts.

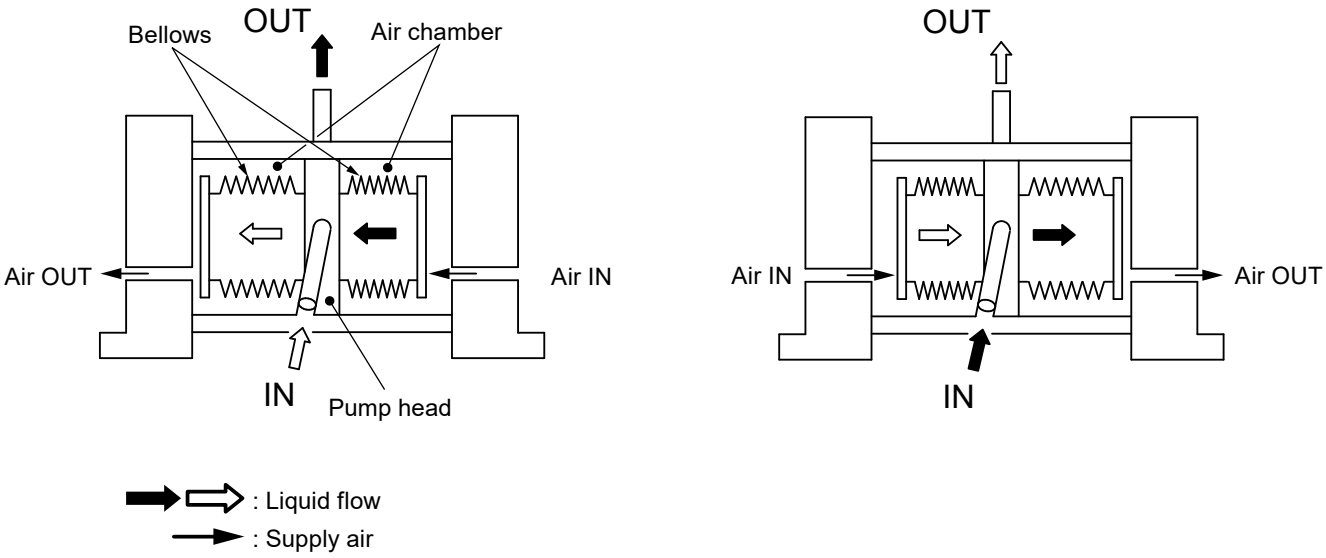

Part names

Pump

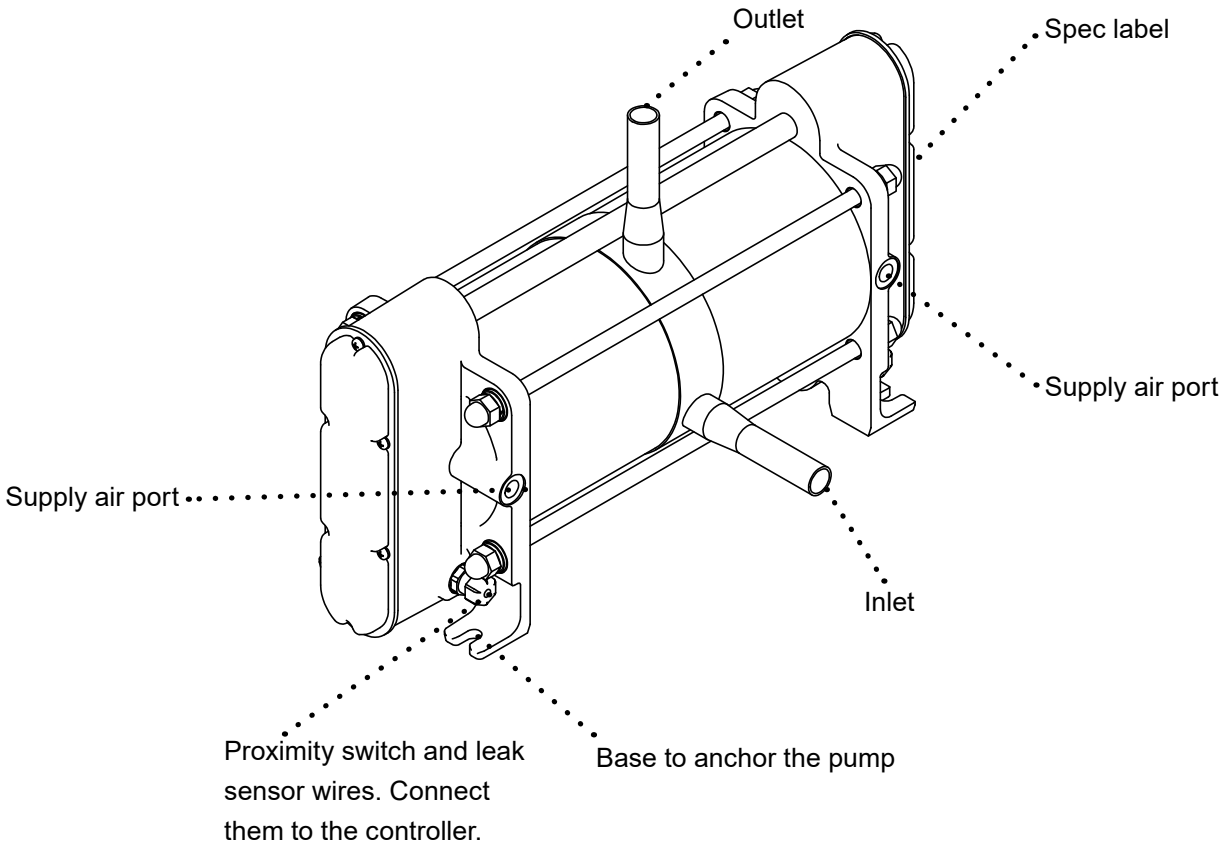

*Do not clean the pump or spec label with a solvent such as benzine or thinner.
*Two or more personnel must be required to lift and move this pump.

Operating conditions

Pump stroke

Observe the maximum stroke rate of 120spm (FW-20H) or 80spm (FW-40H), or the pump can take in a large amount of air, resulting dry running.

*Use the FDC-1 controller and set the maximum allowable speed.

Supply air pressure range

Observe the allowable supply air pressure range at each liquid temperature below.

Liquid temperature	Supply air pressure
10-100ºC	0.2-0.5MPa
101-150ºC	0.15-0.3MPa
151-180ºC	0.15-0.2MPa

*Try to use the minimum allowable supply air pressure to protect the filter and bellows and reduce the risk of solution spray.

*A flow rate changes with supply air pressure. Use a regulator to keep the pressure constant.

Liquid temperature range

Observe the allowable liquid temperature range of 10-180ºC. Note sharp temperature fluctuation (heat shock) may reduce the life of the pump. Contact us for detail.

Liquid characteristics

■ Do not run the pump with the following liquid

- *Liquid that easily crystallizes*
- *Slurry*
- *Low conductivity hydrocarbon liquid*

*Crystallization or the delivery of slurry remarkably shorten the lives of valves and bellows.

*Delivery of low conductivity hydrocarbon liquid can cause ESD damage.

■ Use care handling the following liquid:

- *Stripper*
- *Solvent*
- *Hydrazine*
- *Fuming sulfuric acid*

*Some strippers cause cracks on the PFA bellows and piping, and therefore a warranty period is shortened. Contact us for detail.

*An explosion-proof construction is required for the delivery of solvents. Contact us for detail.

Operation and Stoppage

■ During operation

Make sure a suction and a discharge line are fully opened.

■ When stopping the pump

- Before stopping the pump, release discharge line pressure. Otherwise, the bellows may deform.
- Do not close a discharge valve as stopping the pump, or an impact pressure may deform the bellows or connecting plate.

■ During stoppage

- Do not pressurize both the right and left air chambers at the same time, or the bellows may deform.
- Always check the specification of the double solenoid valve before installation. Some types (pressure centre types) are designed to pressurize both the right and left air chambers at the same time.
- Do not leave the pump with any chemical in the bellows for a long period. Some chemical gas can penetrate the bellows and corrode metal parts.

Air exhaust port

Do not narrow an air exhaust line (for example by reducing the tube I.D.). Or the residual pressure in the pump may deform the bellows.

*Always observe the minimum composite effective cross-sectional area. Do not extend the air exhaust port too far away from the solenoid valve (SV) or the quick exhaust valve (QEV). Otherwise, increased pipe resistance may break the limit.

Leak sensors

The sensors occasionally fails to detect leakage depending on operating conditions. Contact us for detail.

Ambient temperature

Observe the allowable operating ambient temperature range of 0-40ºC.

Pump surface temperature

Risk of burning. The surface temperature of the pump or pipe rises high along with liquid temperature in or right after operation. With the FW-20H, for example, a cylinder surface temperature rises up to 75ºC when liquid temperature is 180ºC and ambient temperature is 17ºC.

Model	Liquid temperature	Cylinder surface temperature	Ambient temperature
FW-20H	180ºC	75ºC	17ºC
FW-40H		79ºC	

Noise from pump

Exhaust noise accompanies pump operation. Provide noise insulation as necessary. With the FW-20H, for example, a noise level rises up to 70.7dB (A) at 120spm and 0.5MPa (supply air pressure).

Model	Supply air pressure	Stroke rate	Noise level
FW-20H	0.5MPa	120spm	70.7dB(A)
FW-40H		80spm	71.7dB(A)

*The noise level above includes the operating noise from the pump and the SV.

Identification codes

Each code represents the following information.

FW - 20 H T 1 - 01
a b a c d e

a. Series name
FW-H : High liquid temperature

b. Maximum flow rate
20 : 20L/min
40 : 40L/min
80 : 80L/min

c. Pump connection (Inlet/Outlet)
T : Tube (standard)

d. Pump head-bellows connection
1 : Mechanical
2 : Welded

e. Special specifications
No symbol : Standard
01 : Special specifications (01, 02…)

Installation

This section describes the installation of the pump, piping and wiring. Read through this section before work. To operate this pump, a 5-port solenoid valve and FDC-1 controller is needed. Always install QEVs (quick exhaust valves) to secure system safety. Purchase separately.

Points to be observed

Observe the following points when installing the pump.

- Be sure to turn off power to stop the pump and related devices before service is performed.
- Be careful for the power not to be turned on during work.
- If you notice any abnormal or dangerous conditions, suspend operation immediately and inspect/solve problems.
- Do not install the pump in a flammable atmosphere.

Pump mounting

Mount the pump in flooded suction or suction lift application.

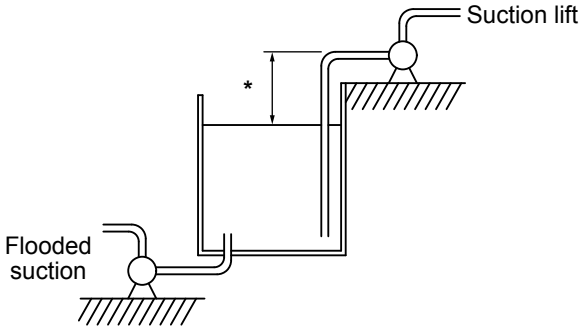

In flooded suction application:

Place the pump as close to the supply tank as possible.

*Flooded suction is recommended for hot liquid transfer or for looped system.

In suction lift application:

Observe the maximum suction lift (2m)*. Place the pump as close to the supply tank as possible.

*The suction lift is based on pumping clean water at ambient temperature and the maximum stroke rate, and varies with liquid characteristics, liquid temperature or suction line length. Contact us for detailed information.

1 Select a location

Select a level location, free from vibration, that won't hold liquid. Anchor the pump so it doesn't vibrate.

See page 9 as well.

*Flooded suction application is recommended.

*Observe the maximum suction lift (2m) in suction lift application.

2 Anchor the pump so it doesn't vibrate

Position the pump upright with the outlet upward and inlet sideways.

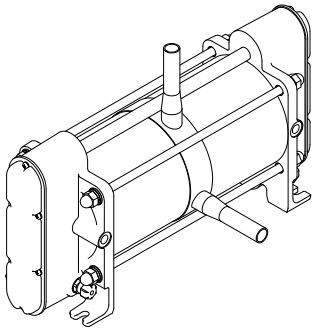

Provide four holes for pump anchoring (M8 or M10 hex anchoring bolts and plate washers) by the following pitch, width and depth.

*Use spring washer as necessary.

Model	Pitch	Width	Depth	Hole I.D.
FW-20H	346^{+2}_{0} mm	10mm	105±1mm	M8
FW-40H	434^{+2}_{0} mm	12mm	143±1mm	M10

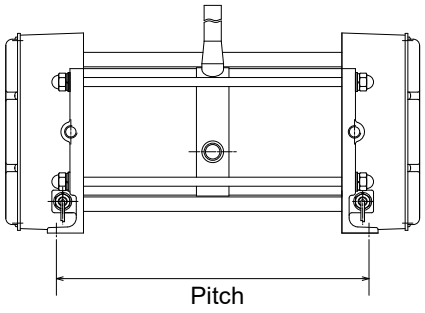

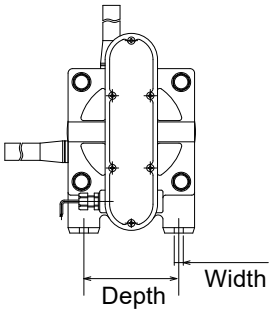

3 Retighten the stud bolts

Tighten the stud bolts that are fixing the cylinder heads to the rated torques as below.

Model	Tightening torque	Model	Tightening torque
FW-20HT1	14.7N•m	FW-20HT2	6.4N•m
FW-40HT1	19.6N•m	FW-40HT2	10.3N•m

NOTE

A leak results in operation if the stud bolts are loose.

Liquid line piping

The pump has different sizes of the inlet/outlet PFA tube at each model. See the table below. Use applicable tube fittings for the connection with your piping system.

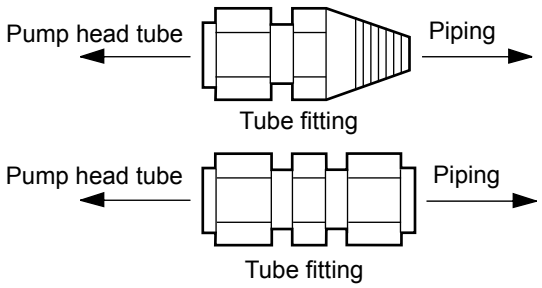

Model	PFA tube sizes
FW-20H	I.D. 16mm × O.D. 19mm
FW-40H	I.D. 22mm × O.D. 25mm

*Select an appropriate tube fitting size. Both discharge- and suction-line I.D. should be larger than the pump outlet & inlet O.D.
*General joints can be used, however, no leakage is allowed under hot liquid transfer or heat cycle.
*Use measures to keep the pump connections free from stress.

Points to be observed

Air blow or flush a suction and a discharge tube to get rid of debris prior to connecting with the pump.

1 Connect a suction and a discharge tube to the pump inlet and outlet via the tube fittings

Use measures to keep the pump connections free from stress such as weight and thermal expansion/ contraction.

NOTE

Be sure to secure each connection to prevent leakage and air ingress.

Suction line

■ Flooded suction

Have the suction line wide and shortest in flooded suction application. In suction lift application, observe the maximum suction lift.

*The suction lift differs with the liquid's characteristics, temperature and suction line length. For detailed information, contact us.

■ Filtration (suction line end)

Install a filter or strainer at the suction line end to prevent particles from entering the bellows. The filter or strainer should not increase piping resistance too much (observe the minimum composite effective cross-sectional diameter.).

NOTE

If wafer fragments enter the pump, they may get stuck in the bellows and eventually cause failure. If they clog the pump head valves, the discharge volume may reduce and the pumping operation may become unbalanced.

■ When installing a valve on the suction line:

Select a valve with an orifice equal to or larger than pipe I.D. A valve with a small orifice may increase the pipe resistance or easily be clogged with crystals. Always open valves during operation.

NOTE

Operating the pump with a suction side valve close, negative pressure increases in the bellows and deforms the bellows inwardly.

Discharge line

■ Pulsation reduction

The pipe resistance increases as a discharge line becomes longer or the number of bends increases. In order to decrease pipe resistance, install a dampener and minimizes pulsation.

*When sending a liquid up via a riser pipe, install a check valve as well as a dampener.

■ When installing a valve on the discharge line:

Select a valve with an orifice equal to or larger than pipe I.D. A valve with a small orifice may increase the pipe resistance or easily be clogged with crystals. Always open valves during operation. Do not close the valve until the discharge pressure reaches "0" after the pump is stopped.

NOTE

Do not close a discharge valve right after stopping the pump. Impact pressure may deform the bellows.

■ Filtration (circulation)

Check a filtering area, filtering performance and effects on the flow before selecting a cycle filter. A desired flow may not be obtained if selection is wrong.

NOTE

Wet the filter before use. A desired flow may not be obtained if the filter is dry. Filter dries up if it is unused for a long period. Read the instruction manual of the filter for details.

■ Filtration (discharge line end)

Install a filter or strainer in a discharge line not to release foreign matters or wafer fragments. The filter or strainer should not increase piping resistance too much (observe the minimum composite effective cross-sectional diameter.).

■ Depressurization at pump stop

When stopping the pump, be sure to release discharge pressure by opening the filter, the air vent valve or through a return circuit.

NOTE

Stopping the pump without releasing discharge pressure may deform the bellows.

Degassing

Gas bubbles are generated when a strong acid is fed into the reaction tank or liquid is transferred through a narrow tube. If such bubbles enter the bellows, the pump runs dry, increasing stroke rate or disturbing liquid transfer. Take a proper step for degassing.

Plan A (Install a baffle to remove gas bubbles)

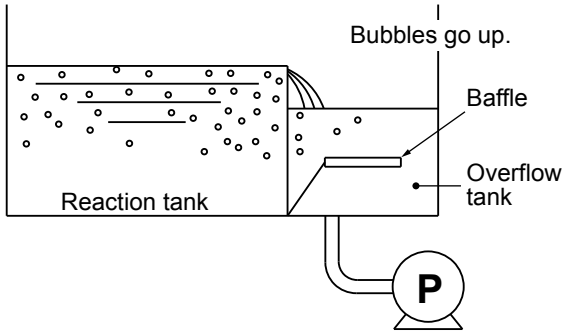

In flooded suction application

Install a baffle in a overflow tank to separate air from the liquid.

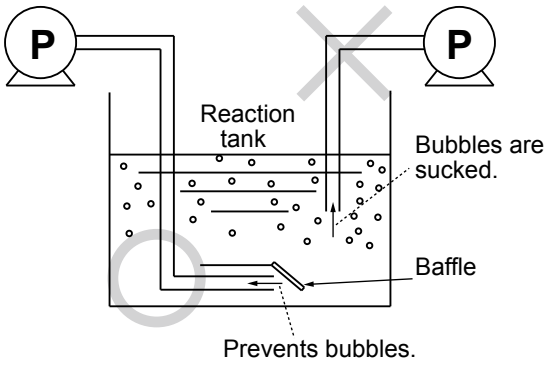

In suction lift application

Install a baffle to the bottom of the reaction tank. And then place the end of suction line under the baffle to suck liquid only.

Plan B (Install an automatic valve)

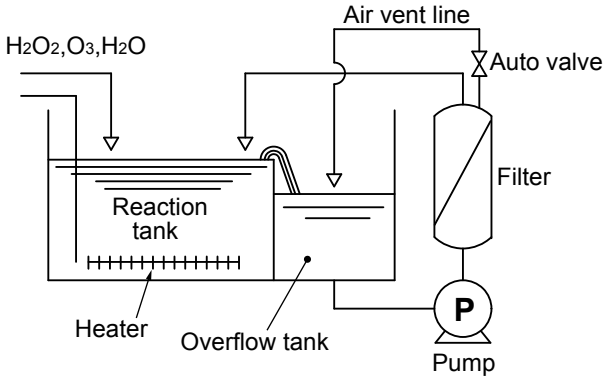

Periodic degassing

Program an automatic valve to open periodically regardless of dry running. For example, the valve opens for ten seconds every two minutes.

*Some filtering area may be too small to release air. Select a suitable filter size.

*Program an open time according to the system performance.

Pinpoint degassing

Install an air detector at the pump inlet and set the auto valve to open timely.

Another detector at the pump outlet will help detect bellows rupture.

Air line piping

Points to be observed

Observe the following points when building up a supply air line.

- A fluctuation of supply air pressure affects the stroke rate and the flow rate. Install a regulator to maintain the supply air pressure constant.
- Install a safety valve to observe the maximum supply air pressure at each liquid temperature range. 0.5MPa at 10-100°C, 0.3MPa at 101-150°C and 0.2MPa at 151-180°C.
- Release the exhaust air into the open air. Narrowing the air exhaust port makes air less likely to be expelled. As a result the bellows may deform inwardly. Select necessary air devices with reference to the air line piping diagram on page 22.
- To reduce exhaust noise, release the exhaust air through the duct of the plant facility to the air, or attach silencers to exhaust ports.
- The air consumption increases as installing two or more pumps and the number of pumps increases. Optimise the air compressor capacity and air line I.D. taking account of composite effective cross-sectional area.
- Supply air should be free from moisture and dust. If the supply air is contaminated with water, oil or dust, the pump may fail in starting. If liquid enters the air chambers, the electrodes may detect it and sounds an alarm.
- Long, narrow or bent supply air tubing prevents air from being expelled from the air chamber, deforming the bellows inwardly, or stroke rate from increasing, reducing a liquid flow.

■ Supply air port I.D.

Supply air port I.D. is Rc 1/4" (FW-20H) or Rc 3/8" (FW-40H). Connect an applicable tube coupling to the pump.

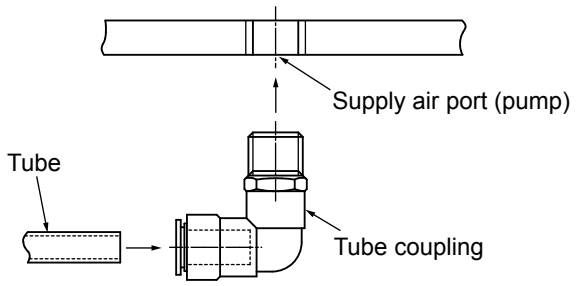

NOTE

Secure each connection for the prevention of air leak.

Air line piping diagram

The diagram below is a general layout of an air-line.

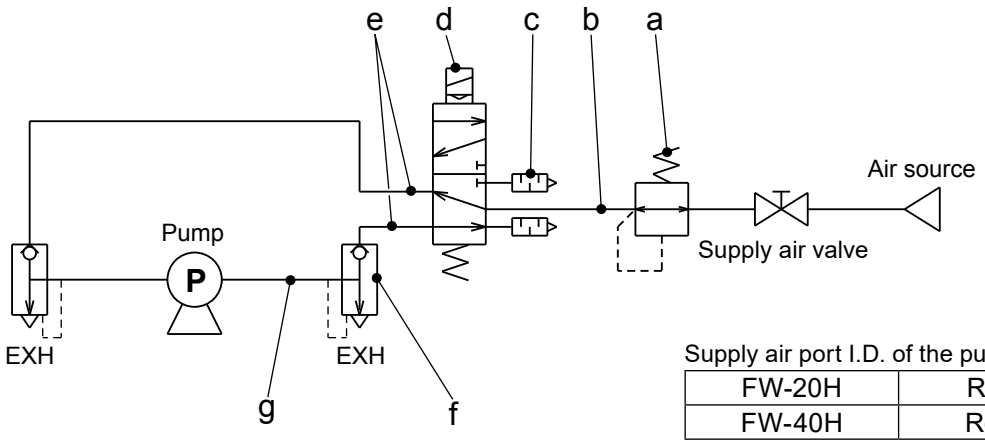

Supply air port I.D. of the pump

FW-20H	Rc1/4"
FW-40H	Rc3/8"

a. Regulator

Select one regulator per pump in accordance with the maximum air consumption of the pump.

*A supply air pressure should not drop 20kPa lower than the maximum rating of the regulator.

NOTE

- Just one regulator can not cover two or more solenoid valves because the valve located farthest from the regulator may not work properly due to a low pressure.

- Observe the supply air pressure below.

Supply air pressure	Liquid temperature
0.2-0.5MPa	10-100ºC
0.15-0.5MPa	101-150ºC
0.15-0.5MPa	151-180ºC

b. The air line between the regulator and the solenoid valve

The optimal air line I.D. changes with the pump model. See below.

Model	Air line I.D.
FW-20H	8mm or more
FW-40H	10mm or more

c. Solenoid valve

Select a 5-port solenoid valve with the effective cross-sectional area as shown below.

Model	Effective cross-sectional area	Sonic conductance
FW-20H	25mm^2 or more	5dm^3 / (s·bar) or more
FW-40H	50mm^2 or more	10dm^3 / (s·bar) or more

*Always check the specification of the double solenoid valve before installation. Some types (pressure centre types) are designed to pressurize both the right and left air chambers at the same time.

d. Muffler

Mufflers should be installed on the exhaust ports of the SV or QEV. Observe the effective cross-sectional area of the mufflers at each pump model.

Model	Effective cross-sectional area
FW-20H	20mm^2 or more
FW-40H	30mm^2 or more

e. The air line between the SV and QEV

The optimal air line I.D. changes with the air line length and the pump model. See below.

Air line length	FW-20H	FW-40H
1m or less	I.D.8mm or more	I.D.10mm or more
1-3mm	I.D.9mm or more. Or use the QEV.	I.D.12mm or more. Or use the QEV.
3m or more	Contact us.	

*Right and left air line length should be equal. Extremely different length can make pulsation big and can affect flow.

f. QEV

The exhausted gas from the pump, which may be corrosive, is expelled via the SV. Install a QEV between the pump and the SV to expel the corrosive gas and protect the SV as necessary. The QEV should be positioned as close to the pump as possible (within 1m from the pump).

Air flow

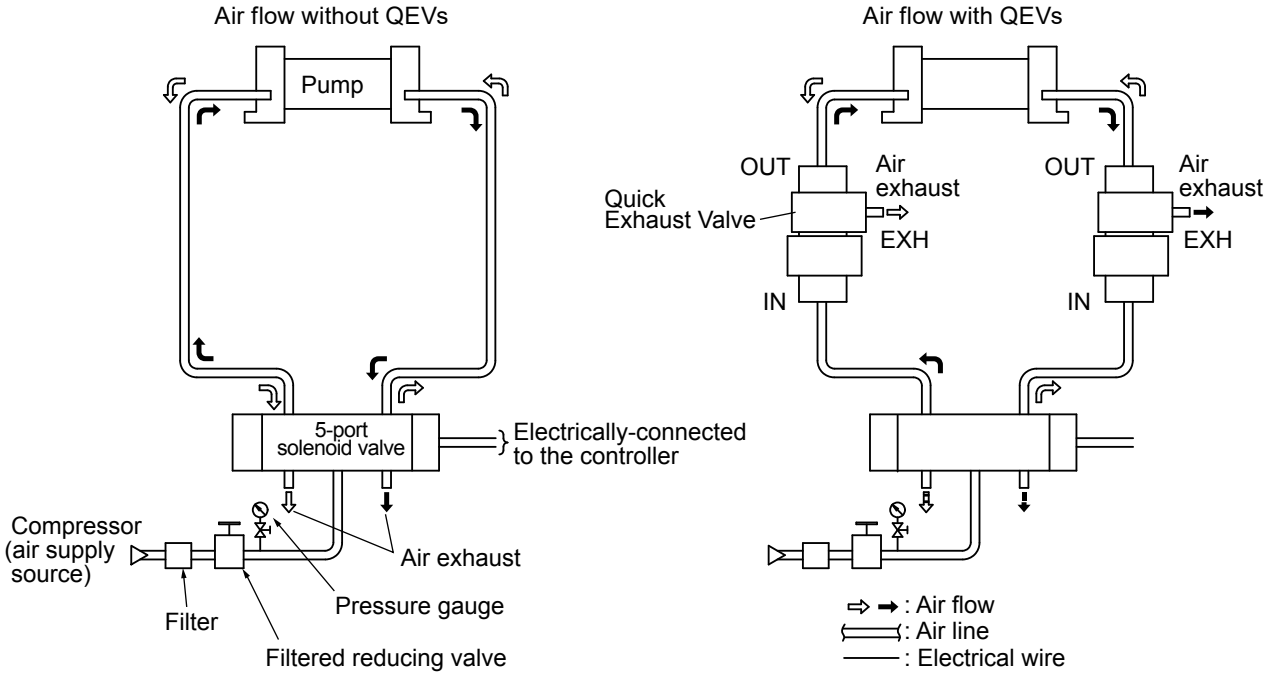

*The quick exhaust valve has IN, OUT and EXH ports (stamped on the valve.). Connect air lines accordingly. Air leak and failure may result if the lines connected improperly.

g. The air line between the QEV and the pump

Keep the line length to 1m or less. The optimal air line I.D. changes with the pump model. See below.

Model	Air line I.D.
FW-20H	8mm or more
FW-40H	10mm or more

Composite effective cross-sectional area

■ Effective cross-sectional area

1. Pneumatic devices

When air is sent through an air line, air cannot flow fully to the actual cross-sectional area due to piping resistance. In the field of pneumatic devices, the term “Effective cross-sectional area” is used to indicate actual air flow. The air flow increases as effective cross-sectional area becomes larger.

*For detail of effective cross-sectional area at each pneumatic device, see the catalogue issued by each manufacturers.

2. Composite effective cross-sectional area

Pneumatic devices are connected in series with the pump. Composite effective cross-sectional area of the entire system is calculated from the following formula.

$$\frac{1}{S^2} = \frac{1}{S1^2} + \frac{1}{S2^2} + \text{---------} + \frac{1}{Sn^2}$$

S : Composite effective cross-sectional area (mm^2)

Sn: Effective cross-sectional area of each pneumatic device (mm^2)

See the catalogues issued by device/pipe manufacturers for each effective cross-sectional area.

Effective cross-sectional area on the exhaust side (OUT→EXH)

QEV-8V quick exhaust valve (FW-20H): $33mm^2$

QEV-10V quick exhaust valve (FW-40H): $33mm^2$

Minimum composite effective cross-sectional area:

FW-20H: S=13.2mm² **FW-40H: S=19.5mm²**

■ Preventive measures against condensation

If condensation is likely to occur in the air lines between the pump and SV, take the following preventive measures.

- Reduce supply air pressure as much as possible (Reduce stroke rate.).
- Provide a heat insulator over the air line.
- Feed the heated and compressed air to the pump. Observe the temperature limits of pipe/tube materials, joints, SV and other component parts.

Electric wiring

Two 5-port double solenoid valves and the FDC-1 controller is required.

Points to be observed

Observe the following points during wiring work.

- Electrical work should be performed by a qualified electrician. Always observe applicable codes or regulations.
- Do not perform wiring work while the power is on. Otherwise, an electrical shock or short circuit may result. Be sure to turn off power before wiring work.
- Standard proximity switches can not be used when a flammable liquid such as solvent is pumped. The proximity switches must be in explosion-proof specifications. Contact us or your nearest dealer.
- Standard electrodes can not be used when a flammable liquid such as solvent is pumped. A spark in a solvent may cause a fire.

Installation

■ Lead wires

5m proximity switch lead wires and 5m leak sensor lead wires are originally built in the pump but then other lead wires for the connection between the controller and pneumatic devices are not provided. Purchase separately.

Lead wires	Required spec
FDC-1 controller power lead	115V 0.24A or more
Connection between the 5-port SV and the FDC-1 controller	24V 0.24A or more

■ Extension of leak sensor wires

Always keep resistance 5kΩ or less. Otherwise, the leak sensor does not work properly.

■ Installation of proximity switch wires

Do not lay on these wires in parallel with the power lead or combine them in a concentric cable (ex. 5 wires cable). Otherwise, system malfunction may result.

■ Extension of proximity switch wires

When extending a proximity switch wire, select the following cable spec depending on cable length.

Wire length	Wire spec
Shorter than 30m	0.3mm² or more
30m or longer	100Ω/km or less (conductor resistance)

Wiring diagram

Turn off the FDC-1 controller before wiring is performed. See the instruction manual of the FDC-1 controller as necessary.

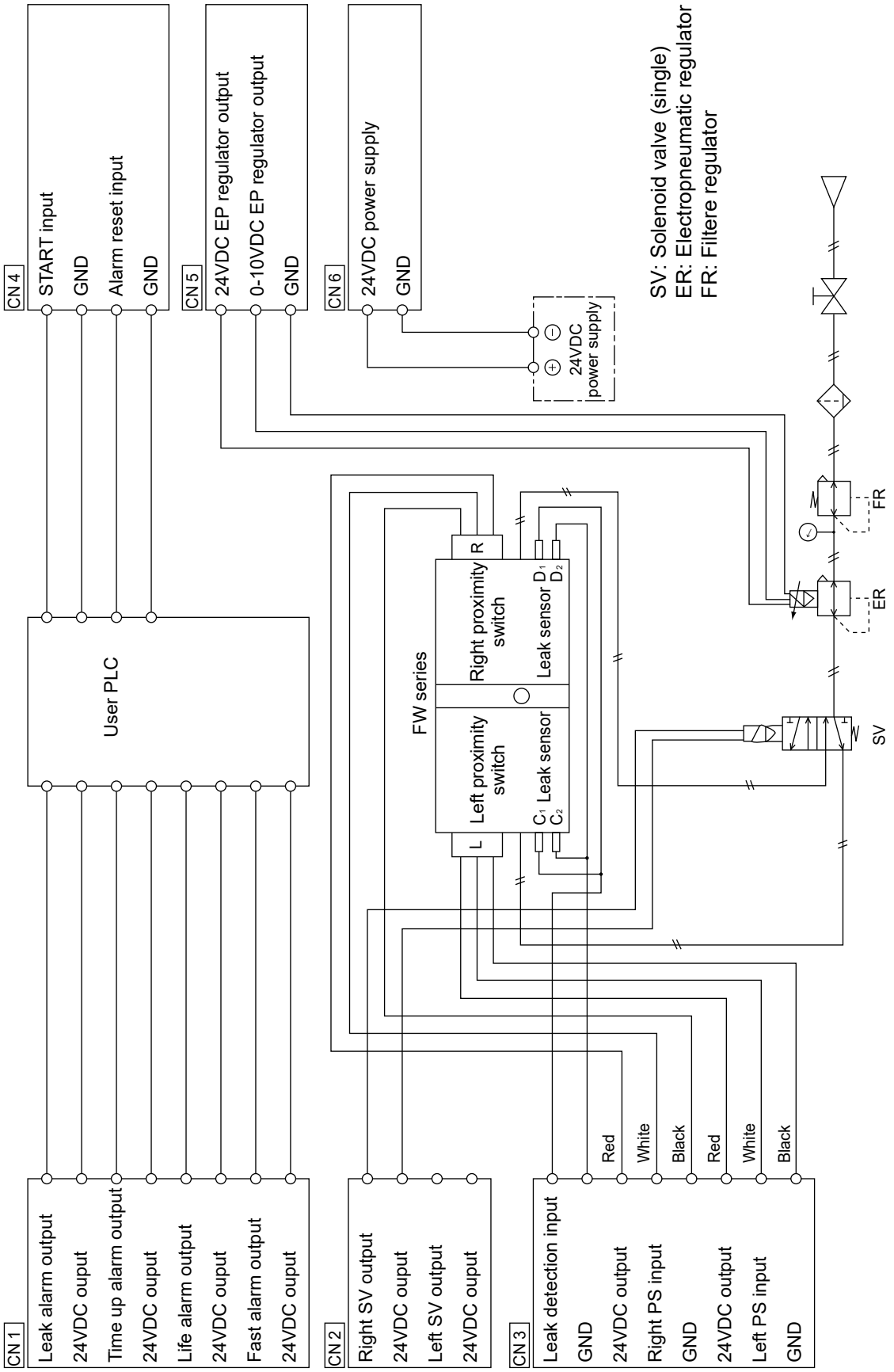

Operation

This section describes pump operation and programming. Run the pump after pipework and wiring are completed.

Before operation

Always check the following items before the first-time operation or resuming operation after a long period of stoppage.

1 Check if electric wiring is made correctly

Check the wiring of proximity switches, leak sensors, solenoid valves, and electropneumatic regulators.

NOTE

A proximity switch may break. Always ensure correct wiring.

2 Check if air piping is made correctly

3 Check if the pump is anchored securely

4 Check if liquid piping is made correctly

5 Check if a suction and a discharge line is open

6 Check for a liquid level in the supply tank

7 Check if the filter is wet

NOTE

See manufacturer's manual for detail.

Pump operation

The start/stop of the pump is controlled by the FDC-1 controller in MANU mode or a user PLC in AUTO mode. The procedure below is the example of starting the pump by keypad operation with the FDC-1.

Points to be observed

Before operation in your system, conduct a trial run with pure water (or chemical liquid) to flush out particles or to measure metal ion level.

Starting the pump

1 Supply air to the pump and open supply air lines

Set the regulator to keep the allowable range of supply air pressure as shown below.

Supply air pressure	Liquid temperature
0.2-0.5MPa	10-100ºC
0.15-0.3MPa	101-150ºC
0.15-0.2MPa	151-180ºC

NOTE

Set an opening of an air valve in order for the pump not to run over the maximum stroke rate under dry running.

2 Push the ENTER key, and then use the SELECT key to choose the option of "START"

3 Push the ENTER key, and then use the SELECT key to choose the option of "FLOW1" or "FLOW2"

4 Push the ENTER key

The pump starts to run with a flashing blue LED on the controller.

Flow rate adjustment

1 Use the air valve to adjust the supply air pressure/flow rate and determine a liquid flow

Stoppage

Points to be observed

- Before stopping the pump, release the pressure from the discharge line. Otherwise, the bellows may deform.
- Do not close a discharge valve as stopping the pump. An impact pressure may deform the bellows or a connecting plate.

1 Push the ENTER key, and then use the SELECT key to choose the option of "STOP"

2 Push the ENTER key

The pump stops running. The blue LED goes off.

NOTE

If you notice any abnormal or dangerous conditions, suspend operation immediately and inspect/solve problems. See the "Troubleshooting" section as necessary.

Maintenance

This section describes troubleshooting, inspection, specification and dimensions.

Points to be observed

Observe the following points during maintenance work.

- Observe instructions in this manual for maintenance, inspection, dismantlement and assembly. Do not dismantle the pump beyond the extent of the instructions.
- Always wear protective clothing such as an eye protection, chemical resistant gloves, a mask and a face shield during disassembly, assembly or maintenance work. The specific solution will dictate the degree of protection. Refer to SDS precautions from the solution supplier.
- Solution in the discharge line may be under pressure. Release the pressure from the discharge line before disconnecting plumbing or disassembly of the pump to avoid solution spray.
- Risk of electrical shock. Be sure to turn off power to stop the pump and related devices before service is performed.
- Before stopping the pump, release the pressure from the discharge line. Otherwise, the bellows may deform.
- Do not close a discharge valve as stopping the pump. An impact pressure may deform the bellows or a connecting plate.

Troubleshooting

First check the following points. If the following measures do not help remove problems, contact your distributor.

States	Possible causes	Points to be checked	Solutions
The pump does not run.	Switch-over failure of the solenoid valve (SV)	-	● Inspect, repair or replace as necessary. ● Use a QEV if corrosive gas affects the SV.
	Improper wiring or the disconnection of the proximity switches.	○ If wiring is done according to each device manual. ○ Air lines and electrical wiring	● Inspect/correct wiring. ● Replace as necessary.*
	Bellows rupture (Leak alarm output)	○ Supply air pressure ○ Stroke rate ○ Liquid temperature ○ If discharge line pressure is released as soon as the pump stops. ○ Air line I.D. and length ○ Closed suction line	● Replace the bellows if damaged.*
	Incorrect air line piping	○ Both right and left air lines	● Correct as necessary.

*Solutions marked with * are conducted by us.

States	Possible causes	Points to be checked	Solutions
	Rising discharge pressure	○ Filter for clogging	● Check or replace the filter as necessary.
		○ If a filter is wet.	● Wet the filter.
		○ Closed discharge line	● Open the discharge line.
	Supply air pressure or air flow is too low.	○ Minimum operating pressure of the SV ○ If proper air line I.D. is selected if two or more pumps are installed.	● Observe the minimum operating pressure. ● Adjust the regulator set pressure as necessary.
	Leak sensor malfunction	○ If the pump is wet.	● Keep the pump dry.
		○ If supply air is dry.	● Keep the supply air dry.
Liquid can not be pumped up.	A check valve is clogged with foreign matters.	○ Check if operation is unstable.	● Install a guard filter in a suction line. Clean or replace the pump.*
	A check valve or a valve seat is worn.	○ Check if operation is unstable.	● Clean or replace the pump.*
	A suction line is closed.	○ Check for a closed suction line.	● Open the suction line.
Flow rate is reduced.	Supply air pressure or air flow is too low.	○ If proper air line I.D. is selected if two or more pumps are installed.	● Observe the minimum operating pressure. ● Adjust the regulator set pressure as necessary.
	Discharge pressure increment	○ Filter for clogging. ○ If a filter is wet. ○ If discharge line is open.	● Replace as necessary ● Perform degassing. ● Open the discharge line.
	A check valve is clogged with foreign matters.	○ Check if operation is unstable.	● Install a guard filter in a suction line. Clean or replace pump head*
	A check valve or a valve seat is worn.	○ Check if operation is unstable.	● Clean or replace pump head*
	A discharge valve is clogged with foreign matters.	○ A discharge valve for clogging.	● Clean or replace the discharge valve.
	Insufficient NPSHa (Net positive suction head available)	○ Air line I.D. and length	● Review suction conditions.

*Solutions marked with * are conducted by us.

States	Possible causes	Points to be checked	Solutions
Liquid leaks.	Bellows rupture	○ Supply air pressure ○ Stroke rate ○ Liquid temperature ○ If discharge line pressure is released as soon as the pump stops. ○ Air line I.D. and length ○ Closed suction line	● Check or replace the pump head bellows unit as necessary*
Excessive air consumption.	A shaft packing is worn.	-	● Replace as necessary.*
	Stud bolts are loose.	-	● Tighten stud bolts with rated torque. See next page.
Unbalanced pump operation	A pump head valve or a valve seat is worn.	-	● Check, clean or replace the pump*.
	Switch-over failure of the SV	○ Observe the minimum operation pressure of the SV.	● Inspect, repair or replace the solenoid valve.
Excessive vibration or noise	Loose pump fixation	-	● Tighten anchor bolts.
	Stroke rate is too high.	○ Observe the maximum stroke rate.	● Reduce supply air pressure or air flow.
Foreign matters from the pump outlet	Chemical crystal, wafer or check valve fragments (through long time operation)	-	● Do not send a liquid that crystallizes by nature. ● Clean or replace pump head.* ● Install a guard filter in a suction/discharge line.

*Solutions marked with * are conducted by us.

Inspection

Perform daily and periodic inspection to keep pump performance and safety.

Daily inspection

Check for a leak or any other abnormality during operation. If you notice any abnormal conditions, stop operation immediately and remove problems according to the "Troubleshooting" section. Replacement of wear parts is necessary at periodic intervals. Contact us or your nearest distributor.

No.	Points to be checked	Remarks
1	Stroke rate	Observe the maximum stroke rate: 120spm (FW-20H) or 80spm (FW-40H)
2	Regulator set pressure	Observe the supply air pressure range at each liquid temperature.
3	Air flow rate	Use a flow meter. Observe the maximum air consumption.
4	A leak from an air or liquid line	Check line connections
5	Supply air cleanness	Keep supply air clean.

*The supply air pressure range changes with liquid temperature. See page 35 for detail.

Periodic inspection

Check the following items every month.

1. Stroke rate reduction

A stroke rate reduces as air leaks. The wear of the shaft packing is a cause of air leak. Replace as necessary.

*Replacement of the shaft packing should be conducted by Iwaki.

2. Air and liquid leak

If air or liquid leak is detected from the pump, release the discharge pressure and the supply air pressure, and leave the pump until it cools down to ambient. Then retighten the stud bolts by the following torque.

Model	Tightening torque	Model	Tightening torque
FW-20HT1	14.7N•m	FW-20HT2	6.4N•m
FW-40HT1	19.6N•m	FW-40HT2	10.3N•m

3. Valve assembly and bellows

Valve assembly and bellows are wear parts and need to be replaced at the end of their estimated life or when their performance deteriorates.

*Life span at each wear part differs with a liquid handled and operating condition.

*Valve assembly and bellows replacement should be conducted by Iwaki.

4. Pump operation after a long period of suspension

Supply the air to the pump (approx. 0.2MPa) and confirm there is no air leakage from the outlet before operation.

Wear part list

To run the pump for a long period, wear parts need to be replaced periodically or when pump performance has reduced. Contact your distributor with the following information for wear part replacement.

1. Part names and part number (See the "Part names" section on page 38 or later.)
2. Pump model identification code and manufacturing number (See pump nameplate.)
3. Drawing number if you have our approval drawing

Model	Parts number	Part names	Q'ty	Estimated life
FW-20HT1/-40HT1	1, 2, 3, 4, 48	Pump head unit	1	1 year
	5, 6, 46	Bellows unit	2	
	25	Shaft packing	2	
FW-20HT2/-40HT2	1, 2, 3, 4, 5, 48	Pump head-bellows unit	1	
	25	Shaft packing	2	

*1. The estimated life span varies with operating conditions and is not warranted.

*2. Q'ty shows the number of parts.

Specification/Outer dimension

Specification

Information in this section is subject to change without notice.

■ FW-20 H T 1 or 2

	Items	Spec		
Operating conditions	Ambient temp/humidity	0-40°C (non-freezing) / 35-95%RH (non-condensing)		
	Storage temp/humidity	-10 - 60°C (non-freezing) / 35-95%RH (non-condensing)		
	Driving method	Pneumatic drive		
	Liquid line connection I.D.	PFA TUBE (I.D.16mm × O.D.19mm)		
	Supply air line connection I.D.	Rc1/4"		
Performance	Max. flow rate*1	20L/min		
	Liquid temperature	10-100ºC	101-150ºC	151-180ºC
	Supply air pressure	0.2-0.5MPa	0.15-0.3MPa	0.15-0.2MPa
	Max. air consumption	330NL/min	200NL/min	140NL/min
	Max. stroke rate	120spm		
	Suction lift*2	2m		
Proximity detector	Type	Inductive proximity sensor		
	Model (Manufacturer)	APS4-12U-E (KOYO ELECTRONICS INDUSTRIES)		
	Output	NPN open collector		
	Supply voltage	12-24VDC, Ripple (p-p): 10% or less		
	Lead wire length	1m		
Leak sensor	Detection method	Electrode		
	Materials of detection part	SUS304		
	Lead wire length	2m		

*1. The maximum flow rate is based on pumping clean water of 20ºC.

*2. The suction lift is based on pumping clean water at an ambient temperature and the maximum spm.

■ FW-40 H T 1 or 2

	Items	Spec		
Operating conditions	Ambient temp/humidity	0-40°C (non-freezing) / 35-95%RH (non-condensing)		
	Storage temp/humidity	-10 - 60°C (non-freezing) / 35-95%RH (non-condensing)		
	Driving method	Pneumatic drive		
	Liquid line connection I.D.	PFA TUBE (I.D.22mm × O.D.25mm)		
	Supply air line connection I.D.	Rc3/8"		
Performance	Max. flow rate*1	40L/min		
	Liquid temperature	10-100ºC	101-150ºC	151-180ºC
	Supply air pressure	0.2-0.5MPa	0.15-0.3MPa	0.15-0.2MPa
	Max. air consumption	480NL/min	300NL/min	220NL/min
	Max. stroke rate	80spm		
	Suction lift*2	2m		
Proximity detector	Type	Inductive proximity sensor		
	Model (Manufacturer)	APS4-12U-E (KOYO ELECTRONICS INDUSTRIES)		
	Output	NPN open collector		
	Supply voltage	12-24VDC		
	Lead wire length	1m		
Leak sensor	Detection method	Electrode		
	Materials of detection part	SUS304		
	Lead wire length	2m		

*1. The maximum flow rate is based on pumping clean water of 20ºC.

*2. The suction lift is based on pumping clean water at an ambient temperature and the maximum spm.

Outer dimension

■ FW-20 H T 1

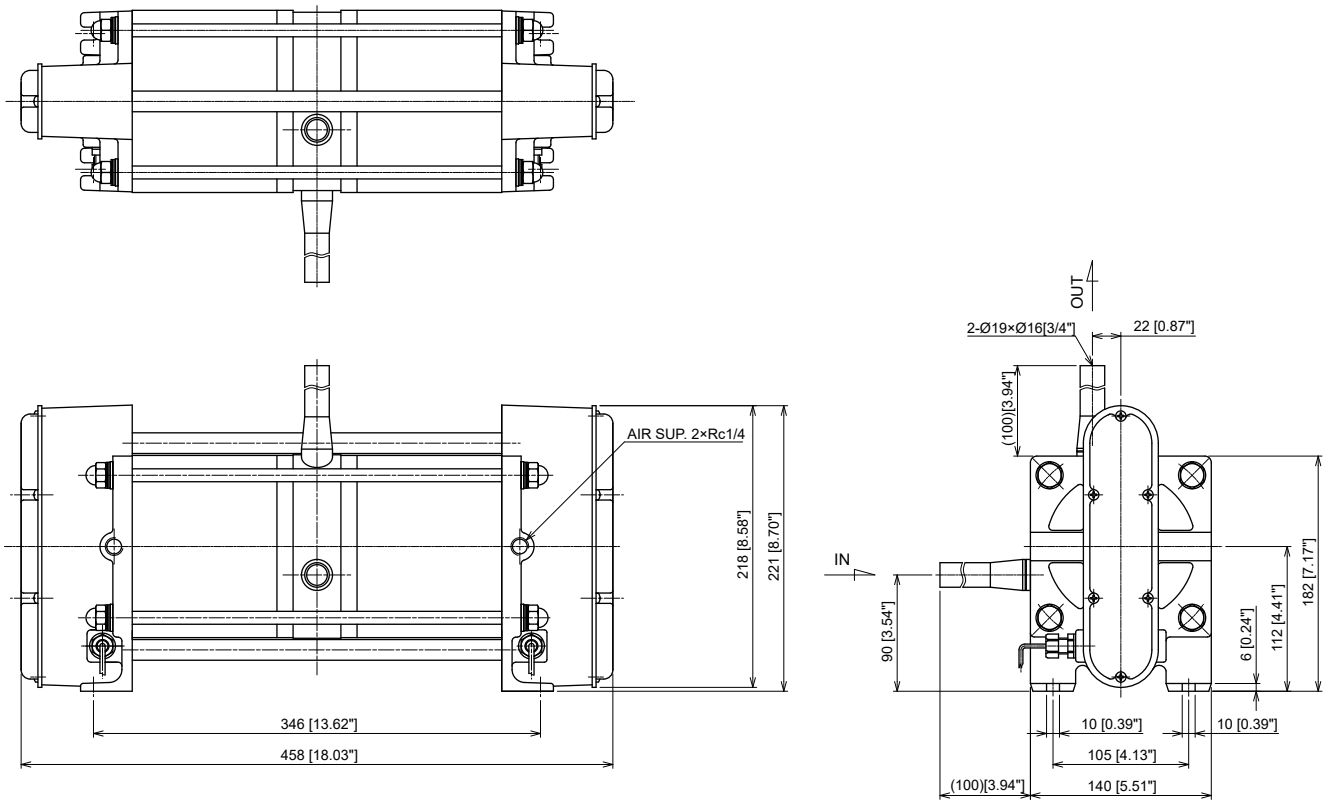

■ FW-20 H T 2

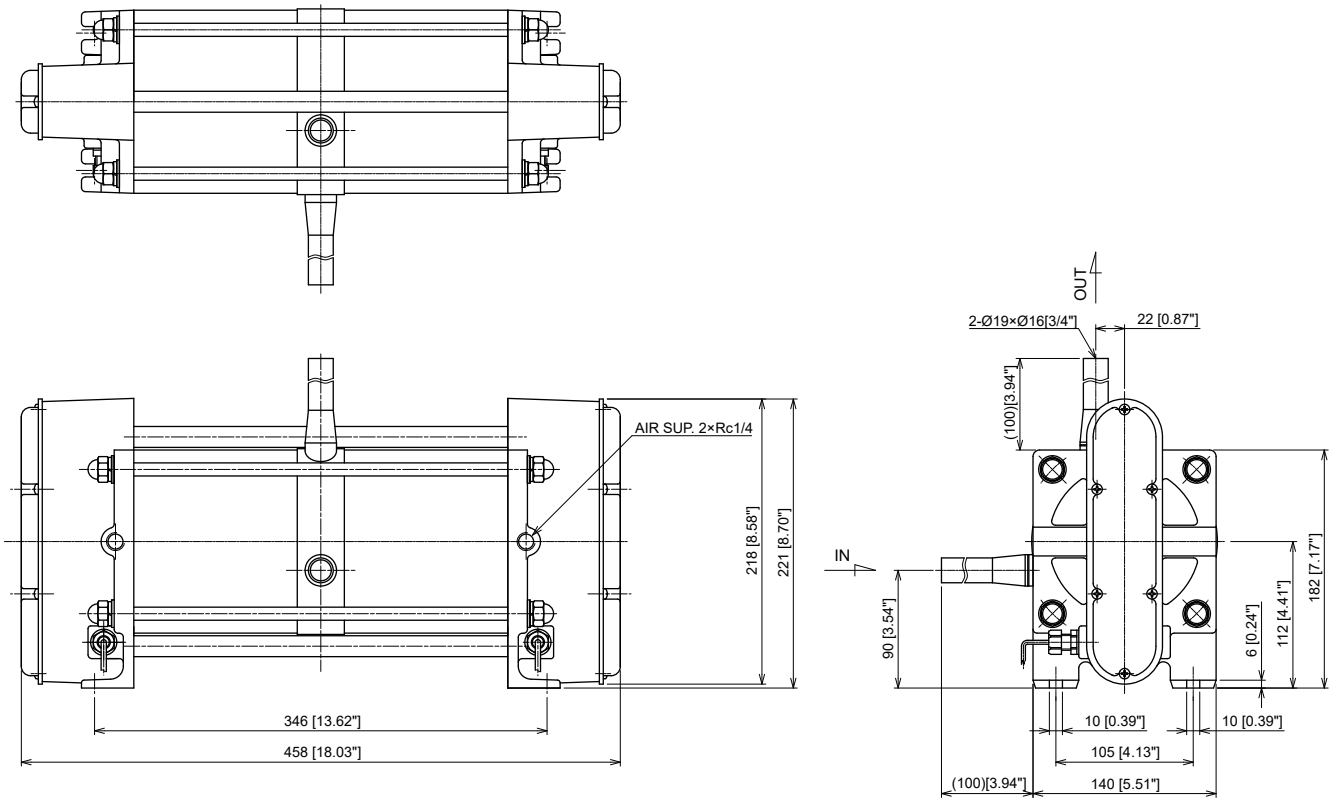

■ FW-40 H T 1

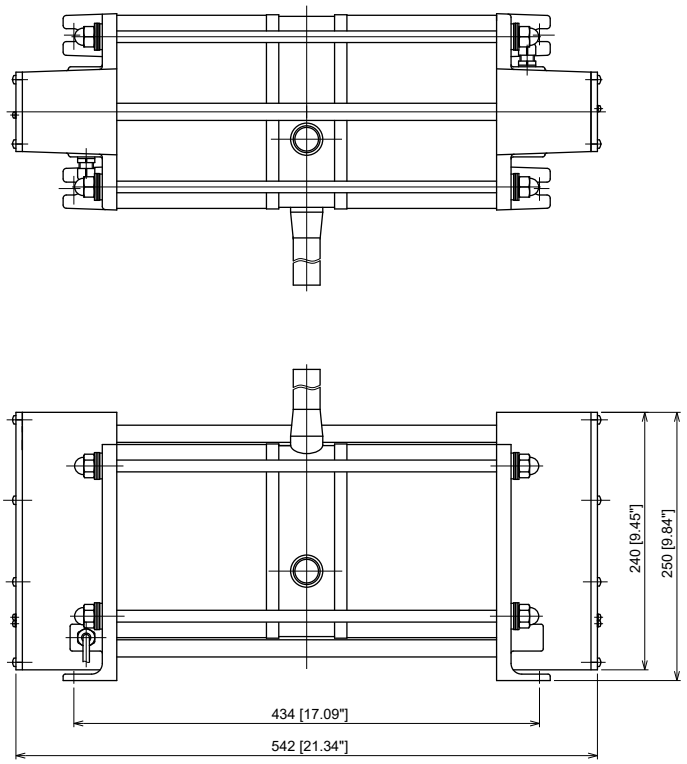

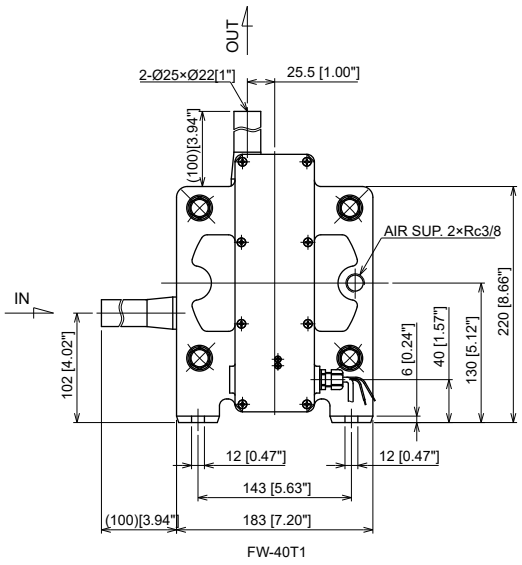

FW-40T1

■ FW-40 H T 2

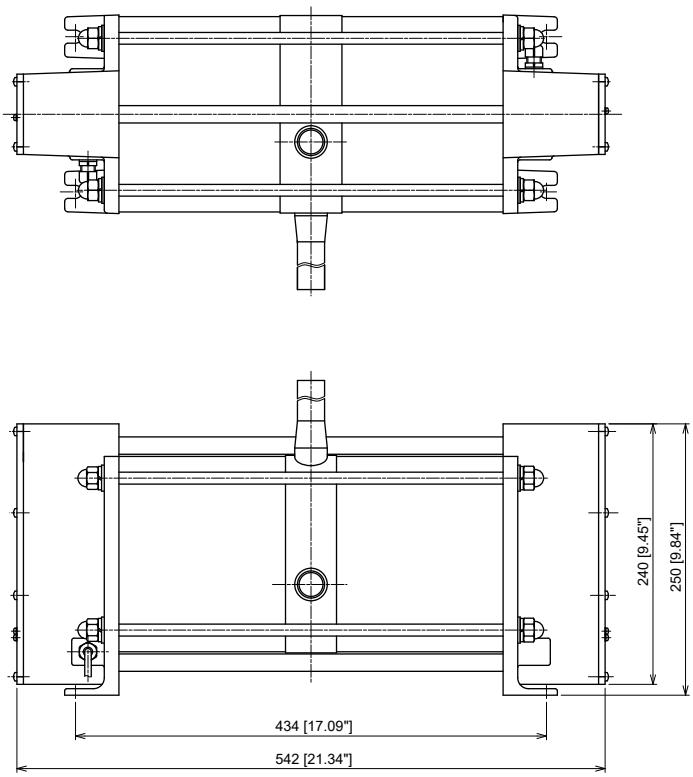

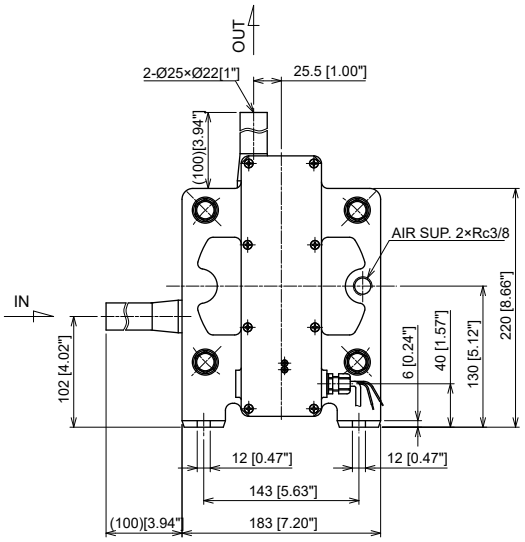

Part names

■ FW-20 H T 1

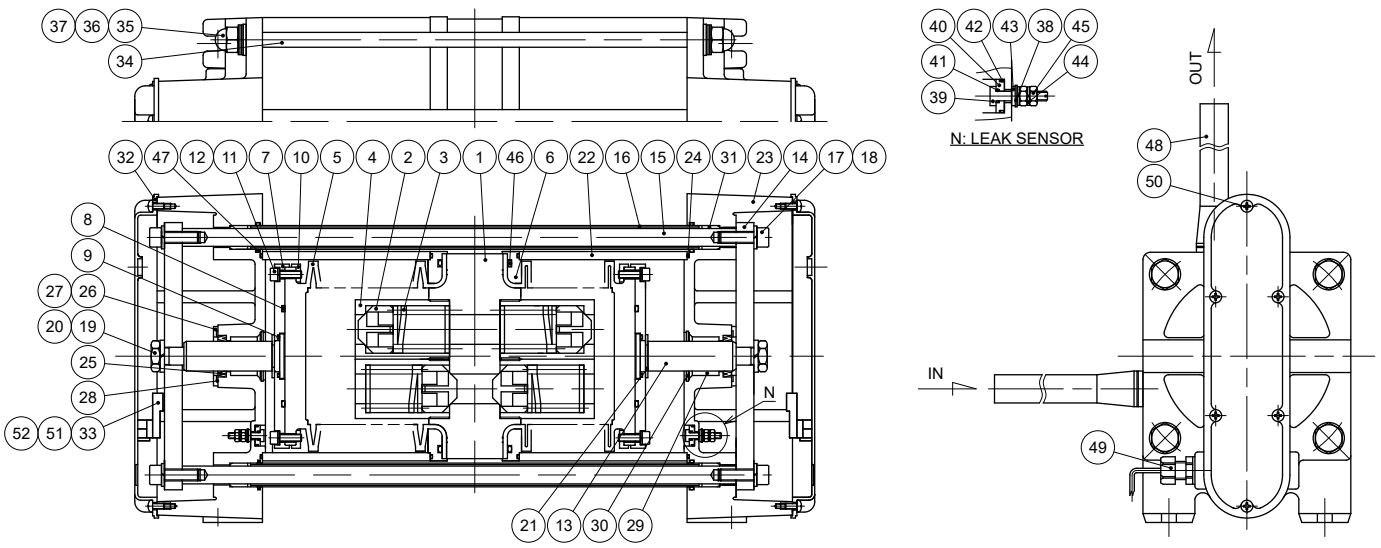

No.	Part names	Q'ty	Materials	Remarks	No.	Part names	Q'ty	Materials	Remarks
1	Pump head	1	PTFE		27	Screw	8	STNLS STL	M4×8
2	Valve	4	PTFE		28	Packing	2	FKM	
3	Valve spring	4	PTFE		29	Bearing	2	Filled PTFE	
4	Valve case	4	PTFE		30	Stop ring	2	STNLS STL	Nominal 32
5	Bellows	2	PTFE		31	Guide bush	4	POM	
6	Bellows ring	2	SUS304	PTFE coated	32	Cylinder head cover	2	PPE	
7	Bellows plate	2	SUS304		33	Proximity detector	2	-	
8	O ring	2	FKM	G-60	34	Stud bolt	4	SUS304	PTFE coated
9	O ring	2	FKM	S-25	35	Domed cap nut	8	STNLS STL	M10 PTFE coated
10	Bellows flange	4	SUS304		36	Plate washer	8	STNLS STL	M10 PTFE coated
11	Hex. sock cap bolt	12	STNLS STL	M5×16	37	Conical spring washer	24	STNLS STL	Nominal 10 PTFE coated
12	Spring washer	12	STNLS STL	M5	38	Plate washer	4	STNLS STL	M4
13	Pump shaft	2	SUS304	HCP	39	Leak sensor	4	SUS304	
14	Connecting plate	2	SUS304		40	Gasket	4	PTFE	
15	Connecting shaft	2	SUS304		41	O ring	4	FKM	S-4
16	Shaft cover	2	SUS304	PTFE coated	42	O ring	4	FKM	S-12
17	Hex. sock cap bolt	4	STNLS STL	M8×25	43	Gasket C	4	PTFE	
18	Spring washer	4	STNLS STL	M8	44	Spring washer	8	STNLS STL	M4
19	Hex. nut	2	STNLS STL	M12	45	Hex. nut	8	STNLS STL	M4
20	Spring washer	2	STNLS STL	M12	46	O ring	2	FKM	AS568-249
21	Stop ring	2	STNLS STL	E-15	47	O ring	4	FKM	P-16
22	Cylinder	2	A6063	PTFE coated	48	Tube	2	PFA	
23	Cylinder head	2	ADC12	PTFE coated	49	Cord gland	2	PP	SCL-6A
24	Gasket	4	FKM		50	Screw	12	STNLS STL	M4×8 PTFE coated
25	Shaft packing	2	FKM		51	Installed base	2	PP	
26	Packing stopper	2	SUS304		52	Screw	4	STNLS STL	M3×10

■ FW-20 H T 2

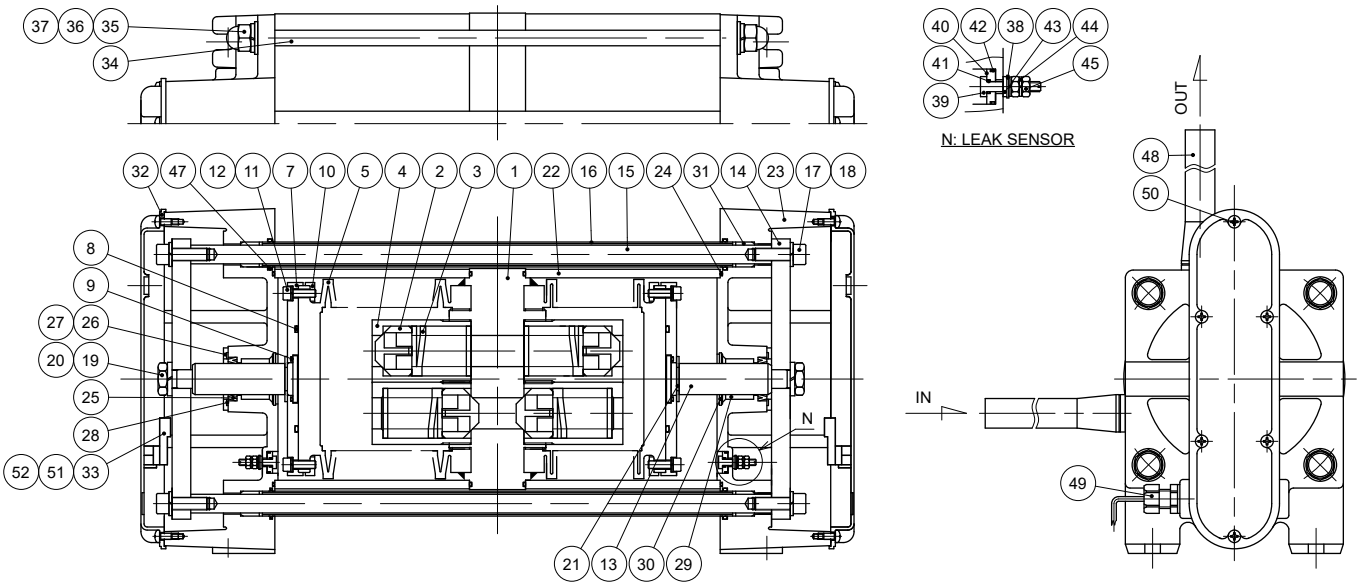

No.	Part names	Q'ty	Materials	Remarks	No.	Part names	Q'ty	Materials	Remarks
1	Pump head	1	PTFE		27	Screw	8	STNLS STL	M4×8
2	Valve	4	PTFE		28	Packing	2	FKM	
3	Valve spring	4	PTFE		29	Bearing	2	Filled PTFE	
4	Valve case	4	PTFE		30	Stop ring	2	STNLS STL	Nominal 32
5	Bellows	2	PTFE		31	Guide bush	4	POM	
7	Bellows plate	2	SUS304		32	Cylinder head cover	2	PPE	
8	O ring	2	FKM	G-60	33	Proximity detector	2	-	
9	O ring	2	FKM	S-25	34	Stud bolt	4	SUS304	PTFE coated
10	Bellows flange	4	SUS304		35	Domed cap nut	8	STNLS STL	M10 PTFE coated
11	Hex. sock cap bolt	12	STNLS STL	M5×16	36	Plate washer	8	STNLS STL	M10 PTFE coated
12	Spring washer	12	STNLS STL	M5	37	Spring washer	8	STNLS STL	M10 PTFE coated
13	Pump shaft	2	SUS304	HCP	38	Plate washer	4	STNLS STL	M4
14	Connecting plate	2	SUS304		39	Leak sensor	4	SUS304	
15	Connecting shaft	2	SUS304		40	Gasket	4	PTFE	
16	Shaft cover	2	SUS304	PTFE coated	41	O ring	4	FKM	S-4
17	Hex. sock cap bolt	4	STNLS STL	M8×25	42	O ring	4	FKM	S-12
18	Spring washer	4	STNLS STL	M8	43	Gasket C	4	PTFE	
19	Hex. nut	2	STNLS STL	M12	44	Spring washer	8	STNLS STL	M4
20	Spring washer	2	STNLS STL	M12	45	Hex. nut	8	STNLS STL	M4
21	Stop ring	2	STNLS STL	E-15	47	O ring	4	FKM	P-16
22	Cylinder	2	A6063	PTFE coated	48	Tube	2	PFA	
23	Cylinder head	2	ADC12	PTFE coated	49	Cord gland	2	PP	SCL-6A
24	Gasket	4	FKM		50	Screw	12	STNLS STL	M4×8 PTFE coated
25	Shaft packing	2	FKM		51	Installed base	2	PP	
26	Packing stopper	2	SUS304		52	Screw	4	STNLS STL	M3×10

■ FW-40 H T 1

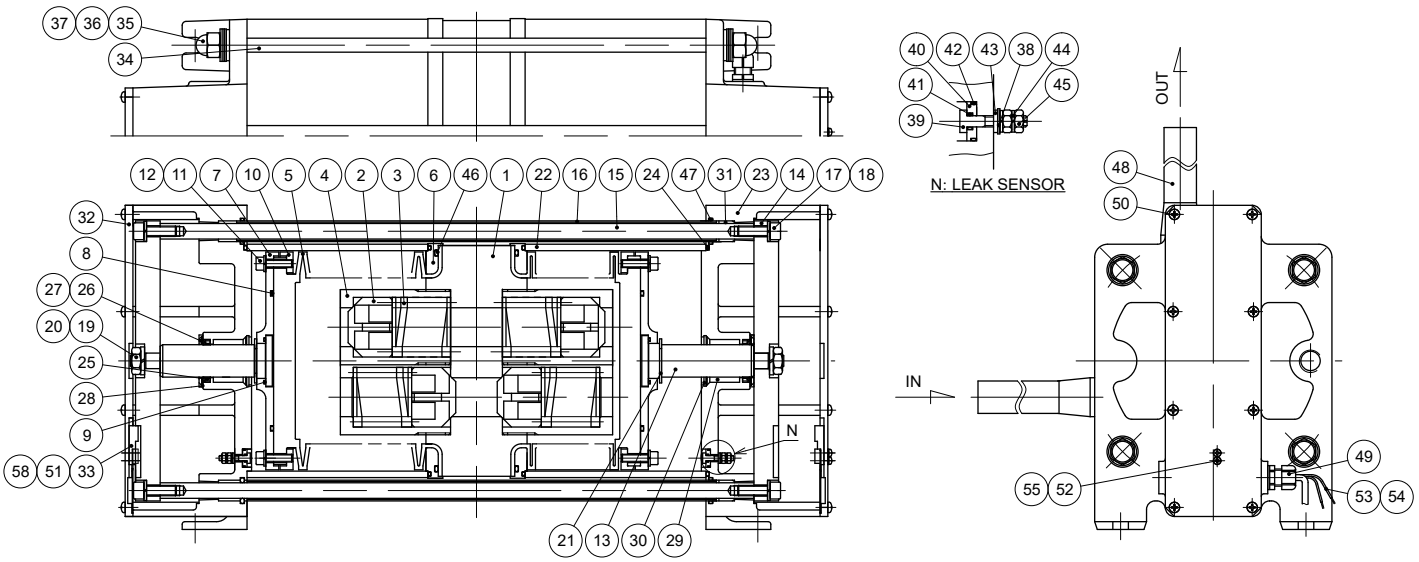

No.	Part names	Q'ty	Materials	Remarks	No.	Part names	Q'ty	Materials	Remarks
1	Pump head	1	PTFE		29	Bearing	2	Filled PTFE	
2	Valve	4	PTFE		30	Stop ring	2	STNLS STL	Nominal 37
3	Valve spring	4	PTFE		31	Guide bush	4	POM	
4	Valve case	4	PTFE		32	Cylinder head cover	2	PVC	
5	Bellows	2	PTFE		33	Proximity detector	2	-	CORD 1M
6	Bellows ring	2	SUS304	PTFE coated	34	Stud bolt	4	SUS304	PTFE coated
7	Bellows plate	2	SUS304		35	Domed cap nut	8	STNLS STL	M12 PTFE coated
8	O ring	2	FKM	G-100	36	Plate washer	8	STNLS STL	M12 PTFE coated
9	O ring	2	FKM	S-32	37	Conical spring washer	24	STNLS STL	Nominal 12 PTFE coated
10	Bellows flange	4	SUS304		38	Plate washer	4	STNLS STL	M4
11	Hex. sock cap bolt	16	STNLS STL	M6×22	39	Leak sensor	4	SUS304	
12	Spring washer	16	STNLS STL	M6	40	Gasket	4	PTFE	
13	Pump shaft	2	SUS304	HCP	41	O ring	4	FKM	S-4
14	Connecting plate	2	SUS304		42	O ring	4	FKM	S-12
15	Connecting shaft	2	SUS304		43	Gasket C	4	PTFE	
16	Shaft cover	2	SUS304	PTFE coated	44	Spring washer	8	STNLS STL	M4
17	Hex. sock cap bolt	4	STNLS STL	M8×25	45	Hex. nut	8	STNLS STL	M4
18	Spring washer	4	STNLS STL	M8	46	O ring	2	FKM	AS568-260
19	Hex. nut	2	STNLS STL	M12	47	O ring	4	FKM	P-16
20	Spring washer	2	STNLS STL	M12	48	Tube	2	PFA	
21	Stop ring	2	STNLS STL	E-19	49	Cord gland	2	PP	SCL-6A
22	Cylinder	2	A6063	PTFE coated	50	Screw	16	STNLS STL	M4×10 PTFE coated
23	Cylinder head	2	ADC12	PTFE coated	51	Installed base	2	SUS304	
24	O ring	4	FKM	172×3	52	Screw	4	STNLS STL	M3×10
25	Shaft packing	2	FKM		53	Cord (black)	2	-	2M
26	Packing stopper	2	SUS304		54	Cord (white)	2	-	2M
27	Screw	8	STNLS STL	M4×8	55	Spring washer	4	STNLS STL	M3
28	Packing	2	FKM		58	Installed plate	2	SUS304	

■ FW-40 H T 2

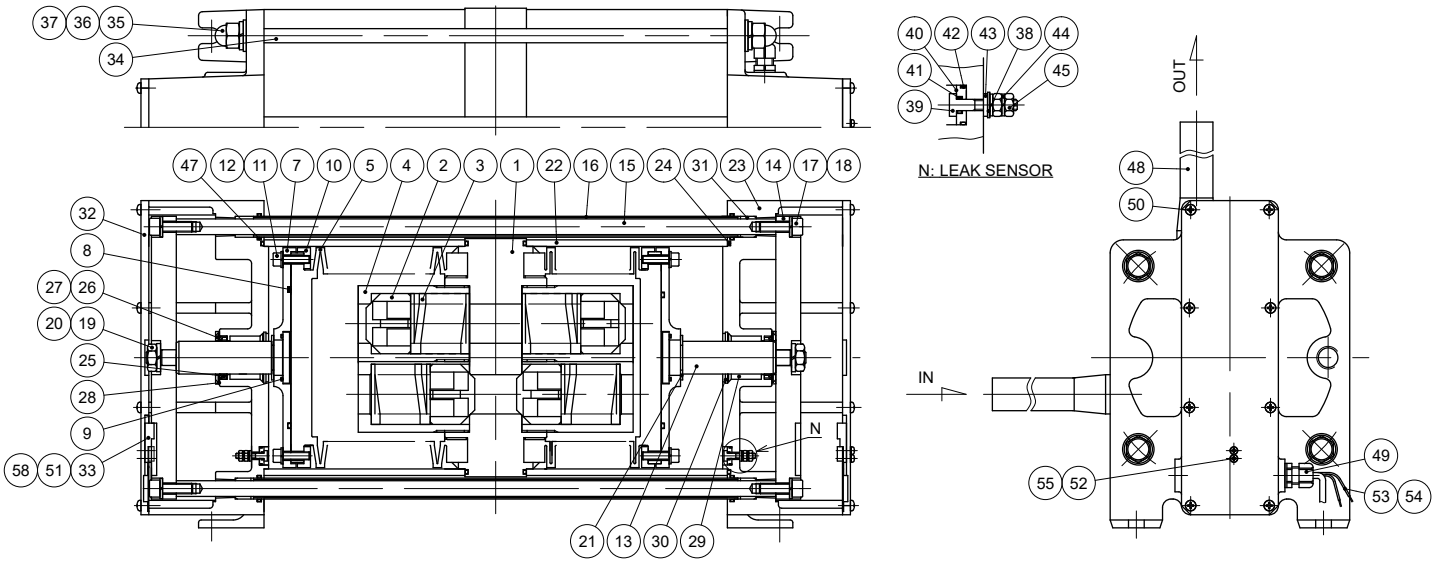

No.	Part names	Q'ty	Materials	Remarks	No.	Part names	Q'ty	Materials	Remarks
1	Pump head	1	PTFE		29	Bearing	2	Filled PTFE	
2	Valve	4	PTFE		30	Stop ring	2	STNLS STL	Nominal 37
3	Valve spring	4	PTFE		31	Guide bush	4	POM	
4	Valve case	4	PTFE		32	Cylinder head cover	2	PVC	
5	Bellows	2	PTFE		33	Proximity detector	2	-	CORD 1M
7	Bellows plate	2	SUS304		34	Stud bolt	4	SUS304	PTFE coated
8	O ring	2	FKM	G-100	35	Domed cap nut	8	STNLS STL	M12 PTFE coated
9	O ring	2	FKM	S-32	36	Plate washer	8	STNLS STL	M12 PTFE coated
10	Bellows flange	4	SUS304		37	Spring washer	8	STNLS STL	M12 PTFE coated
11	Hex. sock cap bolt	16	STNLS STL	M6×22	38	Plate washer	4	STNLS STL	M4
12	Spring washer	16	STNLS STL	M6	39	Leak sensor	4	SUS304	
13	Pump shaft	2	SUS304	HCP	40	Gasket	4	PTFE	
14	Connecting plate	2	SUS304		41	O ring	4	FKM	S-4
15	Connecting shaft	2	SUS304		42	O ring	4	FKM	S-12
16	Shaft cover	2	SUS304	PTFE coated	43	Gasket C	4	PTFE	
17	Hex. sock cap bolt	4	STNLS STL	M8×25	44	Spring washer	8	STNLS STL	M4
18	Spring washer	4	STNLS STL	M8	45	Hex. nut	8	STNLS STL	M4
19	Hex. nut	2	STNLS STL	M12	47	O ring	4	FKM	P-16
20	Spring washer	2	STNLS STL	M12	48	Tube	2	PFA	
21	Stop ring	2	STNLS STL	E-19	49	Cord gland	2	PP	SCL-6A
22	Cylinder	2	A6063	PTFE coated	50	Screw	16	STNLS STL	M4×10 PTFE coated
23	Cylinder head	2	ADC12	PTFE coated	51	Installed base	2	SUS304	
24	O ring	4	FKM	172×3	52	Screw	4	STNLS STL	M3×10
25	Shaft packing	2	FKM		53	Cord (black)	2	-	2M
26	Packing stopper	2	SUS304		54	Cord (white)	2	-	2M
27	Screw	8	STNLS STL	M4×8	55	Spring washer	4	STNLS STL	M3
28	Packing	2	FKM		58	Installed plate	2	SUS304	

EC DECLARATION OF CONFORMITY

A copy of the original Declaration of Conformity

(SUPPLIER'S NAME)

WE

IWAKI CO.,LTD.

(ADDRESS)

6-6 2-CHOME KANDA-SUDACHO CHIYODA-KU TOKYO JAPAN

(PRODUCT)

DECLARE UNDER OUR SOLE RESPONSIBILITY THAT THE PRODUCTS

PNEUMATIC DRIVE BELLOWS PUMP

(MODEL NAME)

FW SERIES

TO WHICH THIS DECLARATION RELATES ARE IN CONFORMITY

WITH THE FOLLOWING STANDARDS OR DIRECTIVES AS FAR AS APPLICABLE

(DIRECTIVES)

MACHINERY DIRECTIVE 2006/42/EC (ANNEX IIA)
RoHS DIRECTIVE 2011/65/EU

(STANDARDS)

EN ISO12100: 2010 EN IEC63000: 2018
EN809: 1998 + A1: 2009

(A PERSON WHO IS AUTHORISED TO COMPILE THE TECHNICAL FILE IN THE COMMUNITY)

IWAKI EUROPE GMBH
SIEMENSRING 115 D-47877 WILLICH GERMANY

NOTE: THIS DECLARATION BECOMES INVALID IF TECHNICAL OR OPERATIONAL MODIFICATIONS ARE INTRODUCED WITHOUT THE MANUFACTURER'S CONSENT.

T. Sawada.

TSUTOMU SAWADA

SENIOR GENERAL MANAGER,

QUALITY ASSURANCE HEAD OFFICE

Tokyo, Jan. 23, 2023

(PLACE AND DATE OF ISSUE) **(NAME AND SIGNATURE OR EQUIVALENT MARKING OF AUTHORIZED PERSON)**

DOCUMENT NO. IS-51K-545-3

UK DECLARATION OF CONFORMITY

A copy of the original Declaration of Conformity

(SUPPLIER'S NAME)

WE

IWAKI CO.,LTD.

(ADDRESS)

6-6 2-CHOME KANDA-SUDACHO CHIYODA-KU TOKYO JAPAN

(PRODUCT)

DECLARE UNDER OUR SOLE RESPONSIBILITY THAT THE PRODUCTS

PNEUMATIC DRIVE BELLOWS PUMP

(MODEL NAME)

FW SERIES

TO WHICH THIS DECLARATION RELATES ARE IN CONFORMITY WITH THE FOLLOWING REGULATIONS OR STANDARDS AS FAR AS APPLICABLE

(REGULATIONS)

S.I. 2008/1597 SUPPLY OF MACHINERY (SAFETY)
S.I. 2012/3032 RESTRICTION OF HAZARDOUS SUBSTANCES

(STANDARDS)

EN ISO12100: 2010 EN IEC63000: 2018
EN809: 1998 + A1: 2009

(A PERSON WHO IS AUTHORISED TO COMPILE THE TECHNICAL FILE IN THE GB MARKET)

SENSYS LIMITED
UNIT 9 POND CLOSE WALKERN ROAD
STEVENAGE HERTS SG1 3QP UK

NOTE: THIS DECLARATION BECOMES INVALID IF TECHNICAL OR OPERATIONAL MODIFICATIONS ARE INTRODUCED WITHOUT THE MANUFACTURER'S CONSENT.

T. Sawada.

TSUTOMU SAWADA
SENIOR GENERAL MANAGER,
QUALITY ASSURANCE HEAD OFFICE

Tokyo, Jun. 6, 2023

(PLACE AND DATE OF ISSUE) **(NAME AND SIGNATURE OR EQUIVALENT MARKING OF AUTHORIZED PERSON)**

DOCUMENT NO. IS-51K-600-2

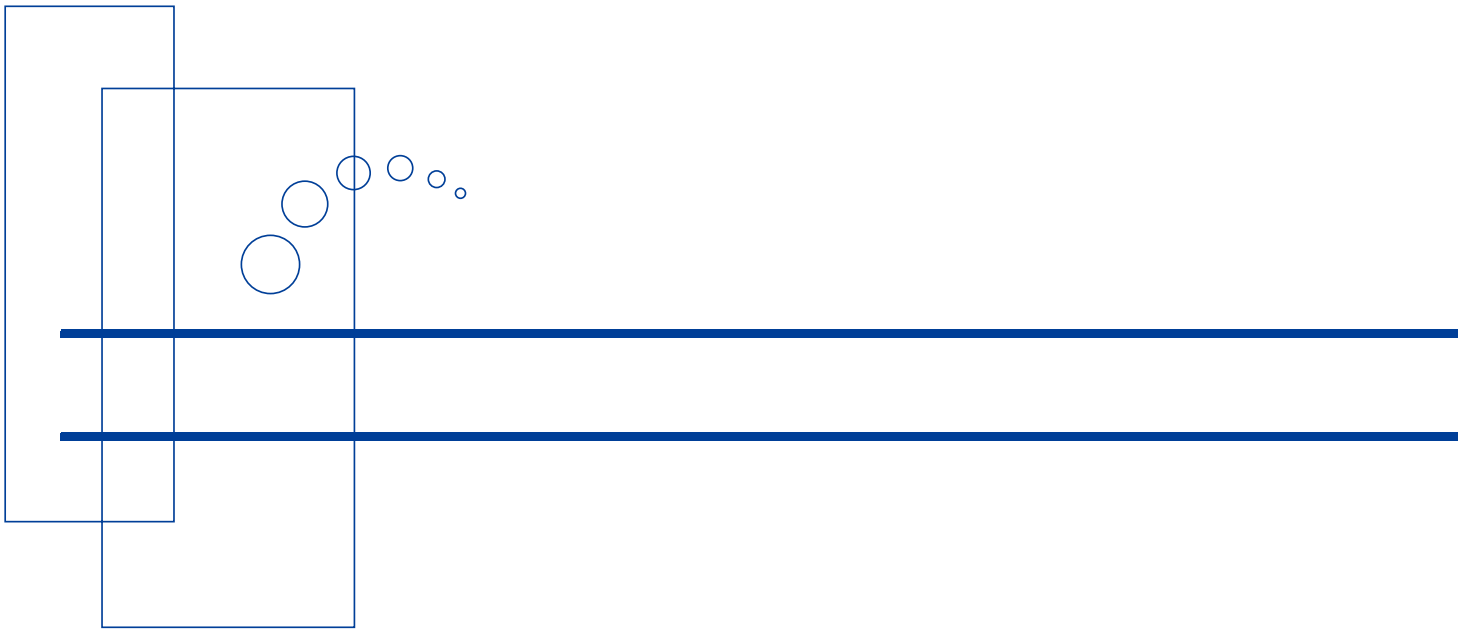

https://www.iwakipumps.jp

IWAKI CO.,LTD. 6-6 Kanda-Sudacho 2-chome Chiyoda-ku Tokyo 101-8558 Japan
TEL: +81 3 3254 2935 FAX: +81 3 3252 8892

European Headquarter / IWAKI Europe GmbH
TEL: +49 2154 9254 0 FAX: +49 2154 9254 48
Germany / IWAKI Europe GmbH
TEL: +49 2154 9254 50 FAX: +49 2154 9254 55
The Netherlands / IWAKI Europe GmbH (Netherlands Branch)
TEL: +31 74 2420011 FAX: +49 2154 9254 48
Italy / IWAKI Europe GmbH (Italy Branch)
TEL: +39 0445 561219 FAX: +39 0445 569088
Spain / IWAKI Europe GmbH (Spain Branch)
TEL/FAX: +34 934 741 638
Poland / IWAKI Europe GmbH (East Europe Branch)
TEL: +48 12 347 0755 FAX: +48 12 347 0900
Denmark / IWAKI Nordic A/S
TEL: +45 48 242345
Finland / IWAKI Suomi Oy
TEL: +358 10 201 0490
Norway / IWAKI Norge AS
TEL: +47 23 38 49 00
Sweden / IWAKI Sverige AB
TEL: +46 8 511 72900
Belgium / IWAKI Belgium N.V.
TEL: +32 13 670200 FAX: +32 13 672030
France / IWAKI France S.A.
TEL: +33 1 69 63 33 70 FAX: +33 1 64 49 92 73
U.S.A. / IWAKI America Inc.
TEL: +1 508 429 1440 FAX: +1 508 429 1386
Brazil / IWAKI Do Brasil Comercio De Bombas Hidraulicas LTDA.
TEL/FAX: +55 19 3244 5900
China (Shanghai) / IWAKI Pumps (Shanghai) Co., Ltd.
TEL: +86 21 6272 7502 FAX: +86 21 6272 6929
China (Hong Kong) / IWAKI Pumps Co., Ltd.
TEL: +852 2607 1168 FAX: +852 2607 1000
China (Guangzhou) / GFTZ IWAKI Engineering & Trading Co., Ltd.
TEL: +86 20 84350603 FAX: +86 20 84359181
China (Shenzhen) / IWAKI Pumps (Shenzhen) Co., Ltd.
TEL: +86 0755 8656 3696
Singapore / IWAKI Singapore Pte Ltd.
TEL: +65 6316 2028 FAX: +65 6316 3221
Indonesia / IWAKI Singapore Pte Ltd. (Indonesia Office)
TEL: +62 21 6906606 FAX: +62 21 6906612
Malaysia / IWAKIm SDN. BHD.
TEL: +60 3 7803 8807 FAX: +60 3 7803 4800
Korea / IWAKI Korea Co., Ltd.
TEL: +82 2 6238 4800 FAX: +82 2 6238 4801
Taiwan / IWAKI Pumps Taiwan Co., Ltd.
TEL: +886 2 8227 6900 FAX: +886 2 8227 6818
Thailand / IWAKI (Thailand) Co., Ltd.
TEL: +66 2 322 2471 FAX: +66 2 322 2477
Australia / IWAKI Pumps Australia Pty Ltd.
TEL: +61 2 9899 2411 FAX: +61 2 9899 2421

T1150-4 '26/09