IWAKI PUMPS

IWAKI Chemical Gear Pump

GM-V

Instruction Manual

⚠Read this manual before use of product

Thank you for selecting an Iwaki GM-V Chemical Gear Pump. This instruction manual deals with *"Safety instructions"*, *"Outline"*, *"Installation"*, *"Operation"*, and *"Maintenance"* sections. Please read through this manual carefully to ensure the optimum performance, safety and service of your pump.

Contents

Chapter Page

IMPORTANT INSTRUCTION 1

SAFETY SECTION ..... 2~5

(Safety Instructions to Prevent Personal Injuries)

1. OUTLINE OF PRODUCT .....6~14

1-1. Before Using Pump 7
1-2. Operating Principle.....8
1-3. Identification Codes.....9
1-4. Specifications 10
1-5. Outer Dimensions.....11
1-6. Description of Parts and Exploded View 12
1-7. Names of Parts 13

2. PUMP OPERATION .....15~26

2-1. Handling Instructions.....16
2-2. Installation 18
2-3. Piping 20
2-4. Wiring.....23
2-5. Operation Step 23

3. MAINTENANCE .....27~36

3-1. Causes of Trouble and Troubleshooting 28
3-2. Consumable Parts.....29
3-3. Disassembly and Assembly 30

EC DECLARATION OF CONFORMITY 37

CE conformity.....38

Waste Electrical and Electronic Equipment (WEEE) 38

This instruction manual should be kept on hand by the end user for quick reference.

Contact us or your nearest dealer if you have any questions.

Important instruction

For the Safe and
Correct Handling of the Pump

- "Safety Instruction" section deals with important details about handling of the product. Before use, read this section carefully for the prevention of personal injury or property damage.
- Observe the instructions accompanied with "WARNING" or "CAUTION" in this manual. These instructions are very important for protecting users from dangerous situations.
- The symbols on this instruction manual have the following meanings:

⚠ **WARNING**	**Nonobservance or misapplication of "Warning" sections could lead to a serious accident which may result in death.**
⚠ **CAUTION**	**Nonobservance or misapplication of "Caution" sections could lead to personal injury or property damage.**

Types of Symbols


Indicates that "Warning" or "Caution" must be exercised. Inside this triangle, a concrete and practical image provided as a warning or caution message is depicted.


Indicates a prohibited action or procedure. Inside or near this circle, a concrete and practical image of the activity to be avoided is depicted.


Indicates an important action or procedure which must be performed or carried out without fail. Failure to follow the instructions herein can lead to malfunction or damage to the pump.

⚠Export Restrictions

Technical information contained in this instruction manual might be treated as controlled technology in your countries, due to agreements in international regime for export control. Please be reminded that export license/permission could be required when this manual is provided, due to export control regulations of your country.

Safety section

⚠WARNING

- **Turn off power before service**
  Risk of electrical shock. Be sure to turn off power to stop the pump and related devices before service is performed.


Turning off power

- **Stop operation**
  If you notice any abnormal or dangerous conditions, suspend operation immediately and inspect/solve problems.



- **Do not use the pump in any condition other than its intended purpose**
  The use of the pump in any conditions other than those clearly specified may result in failure or injury. Use this product in specified conditions only.


Prohibited

- **Do not modify the pump**
  Alterations to the pump carry a high degree of risk. It is not the manufacturer's responsibility for any failure or injury resulting from alterations to the pump.


No Remodeling

- **Wear protective clothing**
  Always wear protective clothing such as an eye protection, chemical resistant gloves, a mask and a face shield during disassembly, assembly or maintenance work. The specific solution will dictate the degree of protection. Refer to SDS precautions from the solution supplier.


Wear protective gear

- **Do not damage the power cable**
  Do not pull, knot, or crush the power cable. Damage to the power cable could lead to a fire or electrical shock if cut or broken.


Prohibited

- **Do not operate the pump in a flammable atmosphere**
  Do not place explosive or flammable material near the pump. Check oil leakage. Repair as necessary and wipe oil off. Store the oil in accordance with local laws.


Fire ban

- **Use strong ropes (chains) for lifting up the pump**
  Keep away from the pump while it is lifted up for installation. Serious injury may result if lifting ropes (chains) break. Observe the working load limit of the ropes (chains).


Prohibited

- **Use proper lifting equipment**
  Use the eye bolt, chains, or belt slings to lift the pump in a horizontal position. Otherwise, the pump may fall, resulting in serious injury.


Prohibited

Safety section

⚠ CAUTION

- **Qualified personnel only**
  The pump should be handled or operated by qualified personnel with a full understanding of the pump. Any person not familiar with the product should not take part in the operation or management of the pump.



- **Use specified power only**
  Do not apply power other than that specified on the nameplate. Otherwise, failure or fire may result. Ensure the pump is properly grounded.



- **Keep electric parts and wiring dry**
  Risk of fire or electric shock. Install the pump where it can be kept dry.



- **Ventilation**
  Fumes or vapours can be hazardous with certain solutions. Ensure proper ventilation at the operation site.



- **Do not install/store the pump:**
  - In a flammable/corrosive atmosphere.
  - In a dusty/humid environment.
  - Where ambient temperature can exceed 0-40ºC.
  - In direct sunlight or wind & rain (except an outdoor type).
  - Where ambient humidity can exceed 35-85%RH.
  - Under mechanical vibrations.



- **Spill precautions**
  Ensure protection and containment of solution in the event of plumbing or pump damage (secondary containment).



- **Do not use the pump in a wet location**
  The pump is not waterproof. Use of the pump in wet or extremely humid locations could lead to electric shock or short circuit.



- **Do not run pump dry**
  Do not run pump dry (operation without priming water or with a suction valve closed). Internal parts are excessively worn by friction heat and fatal pump damage results.



- **Grounding**
  Risk of electric shock! Always properly ground the pump. Conform to local electric codes.



Safety section

⚠ CAUTION

- **Install a GFCI (earth leakage breaker)**
  An electrical failure of the pump may adversely affect other devices on the same line. Purchase and install an earth leakage breaker separately.


Electrical shock

- **Preventative maintenance**
  Follow instructions in this manual for replacement of wear parts. Do not disassemble the pump beyond the extent of the instructions.



- **Do not close suction and discharge lines during operation**
  Pump and piping may break. Install a relief valve to ensure safety and prevent damaged plumbing.


Prohibited

- **Do not use a damaged pump**
  Use of a damaged pump could lead to an electric shock or death.


Prohibited

- **Disposal of a used pump**
  Dispose of any used or damaged pump in accordance with local rules and regulations. See page 38 to comply with the European Directive 2012/19/EU on waste electrical and electronic equipment.



- **Do not stand on the pump**
  Injury or damage may result when the pump turns over.


Prohibited

- **Before starting the pump**
  Ensure no one is around the pump before connecting the power. The pump does not have an ON-OFF switch and starts automatically when the power cable is plugged in.



- **Remove foreign matter**
  If foreign matter enters the pump, turn off the power and clean the pump. Otherwise, the pump may be damaged.



- **Do not insert a finger through the bottom hole of the bracket**
  Risk of personal injury. A rotating shaft may catch the finger or hand.


Caution

- **Provide a strainer as close to the pump inlet**
  Otherwise, foreign matter could fatally damage the pinion or the internal gear of the pump. Contact us to find the best mesh size for your conditions.



Safety section

⚠ CAUTION

- **Do not touch the pump or pipe with bare hands**
  Risk of burns. The surface temperature of the pump or piping becomes very high during and immediately after operation, depending on the liquid temperature.



- **Pressure removal**
  Solution in the discharge line may be under pressure. Release the pressure from the discharge line before disconnecting plumbing or disassembly of the pump to avoid solution spray.



- **Keep the caution label and nameplate clean**
  If labels and a nameplate becomes unglued or illegible, contact us to replace them with new ones.



- **Static electricity**
  When low electric conductivity liquids such as ultra-pure water and fluor inactive liquid (e.g. Fluorinert™) are handled, static electricity may be generated in the pump and may cause static discharge. Take countermeasures to remove static electricity.



- **Do not cover the pump with a cloth**
  Covering the pump may cause heat to build up in the motor, resulting in fire or electrical/mechanical failure.



1. OUTLINE OF PRODUCT

1-1. Before Using Pump 7

1-2. Operating Principle 8

1-3. Identification Codes 9

1-4. Specifications 10

1-5. Outer Dimensions 11

1-6. Description of Parts and Exploded View 12

1-7. Names of Parts 13

1-1. Before Using Pump

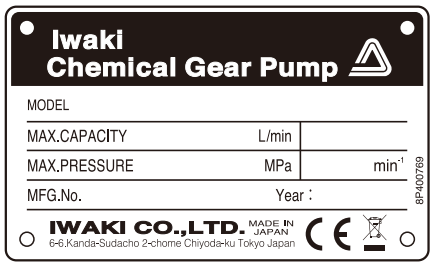

Spec label (pump unit) for the European market

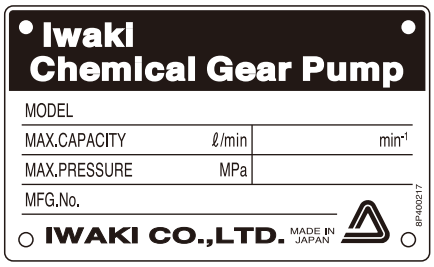

Spec label (pump unit) for any area other than the European market

After unpacking, check the following points to confirm that the delivered product and its accompanying parts and elements are exactly what you ordered.

When lifting the pump please follow the procedure mentioned "2. Installation" of "Pump operation".

[1] Do the model and frequency indicated on the nameplate conform to your order?

[2] Has the pump unit or any part of it been damaged or bolts and nuts been loosened during delivery?

[3] The fourth numeral of the MFG. No. shows the year the product was manufactured.

(e.g.) ××6×××
"6" shows the product was manufactured in the year 1996.

If you find anything wrong, please refer to the dealer you placed your order with.

*The CE marking on our product(s) is for us to market the product(s) into the European market, however, the CE marking does not ensure any safety or conformity of the product(s) outside the European market.
When the pump is incorporated into the equipment marketed in the European market, such equipment must meet all the requirements of applicable directives.
In such a case, any person who places the equipment on the market must carry a CE mark on the equipment as a manufacturer.

1-2. Operating Principle

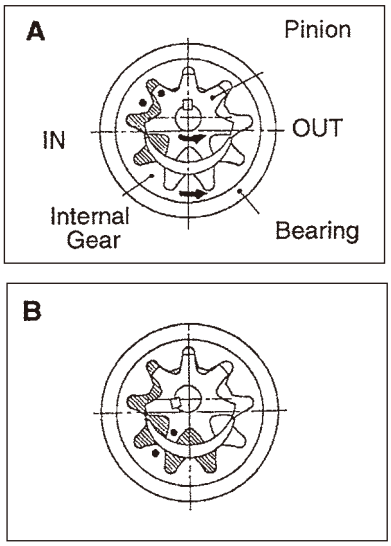

[1] Pumping is carried out by a change in the capacity of the meshed part between the pinion (drive-side gear) supported by two bearings and the internal gear (driven-side gear) whose periphery is supported by a bearing. (A)

[2] In the suction process, they are out of mesh and the space defined by the two gears and the casing expands. The negative pressure caused by this process works to suck liquid into this space. (B)

[3] In the discharge process, the teeth of the gears begin to mesh and the space defined by the two gears and the casing shrinks to force out the liquid. (C)

1-3. Identification Codes

Example:

GM	-	15	V	K	C	V	-	04	F	C	-	N
a		b	c	d	e	f		g	h	i		j

a. Pump type
M : Magnetic drive

b. Size (Discharge per revolution)
15 : 3.3 m*l*/rev. 25 : 12.8m*l*/rev.

c. Material of body
V : PVC

d. Material of gears
K : SiC

e. Material of bearings
C : Carbon K : SiC

f. Sealing material of O ring
V : FKM E : EPDM

g. Motor output
04 : 0.4kW 07 : 0.75kW

h. Type of motor
F : Inverter motor

i. Motor specifications
B : Explosion proof, outdoor type
C : Totally enclosed fan cooled, outdoor type

j. Special specifications
No symbol :
N : NEMA motor specification (NPT connection is employed for piping.)
I : IEC motor specification (PT connection is employed for piping.)
S : Special specification

1-4. Specifications

■ Specifications by viscosity

Model	Discharge per revolution mL/rev	Maximum speed mn^{-1}	Maximum discharge pressure*1 MPa {kgf/cm^2}	Temperature range ºC	Viscosity range*2 mPa•S {cP}	Maximum suction pressure MPa {kgf/cm^2}	Connection
GM-15V	3.3	1800	0.5 {5}	0-50	$0 \leqq \mu \leqq 50$	0.3 {3}	JIS 10K 15A
GM-25V	12.8						JIS 10K 20A

*1 The values listed in the table are maximum values.
It depends on the motor rpm and viscosity. For further detail, please refer the following table.

*2 Viscosity Range is applied to Newtonian-fluid.

■ Specifications by viscosity

Model	Viscosity range mPa•S {cP}	Maximum discharge pressure MPa {kgf/cm^2}	Maximum capacity L/min
GM-15V	$0.5 \leqq \mu < 1$	0.3 {3.0}	5.9
	$1 \leqq \mu < 3$	0.37 {3.7}	
	$3 \leqq \mu \leqq 50$	0.5 {5.0}	
GM-25V	$0.5 \leqq \mu \leqq 50$		23.0

1-5. Outer Dimensions

■ GM-25VK _ _-07F-I

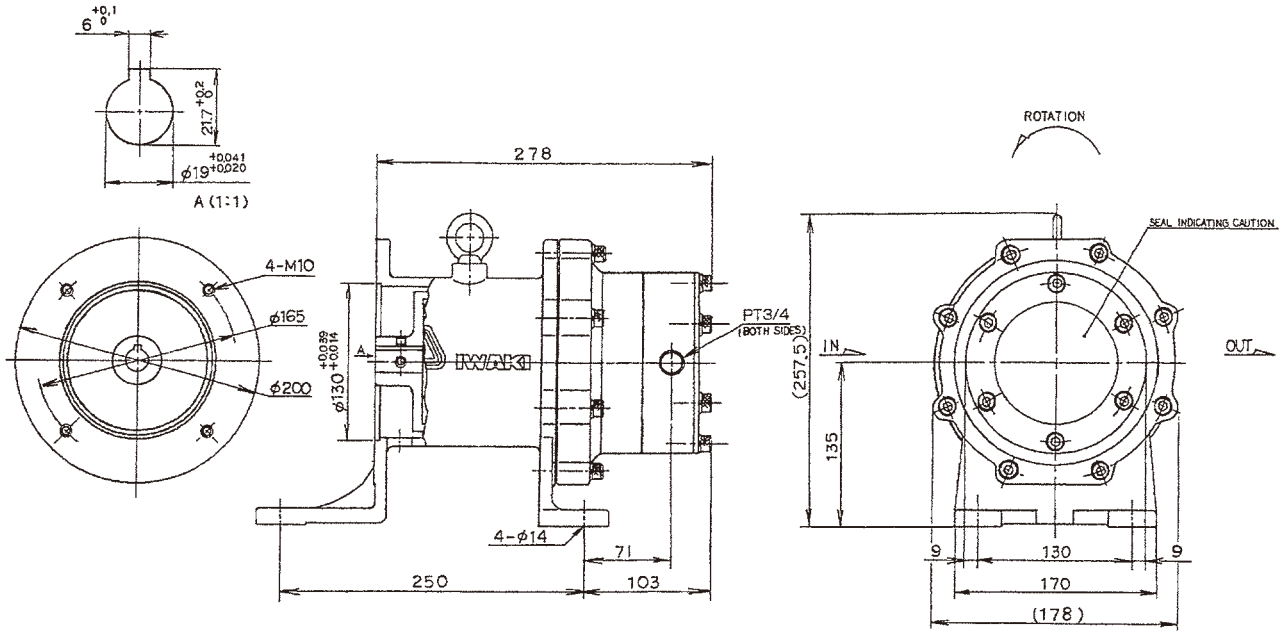

21.8kg

■ GM-15VK _ _-04F-I

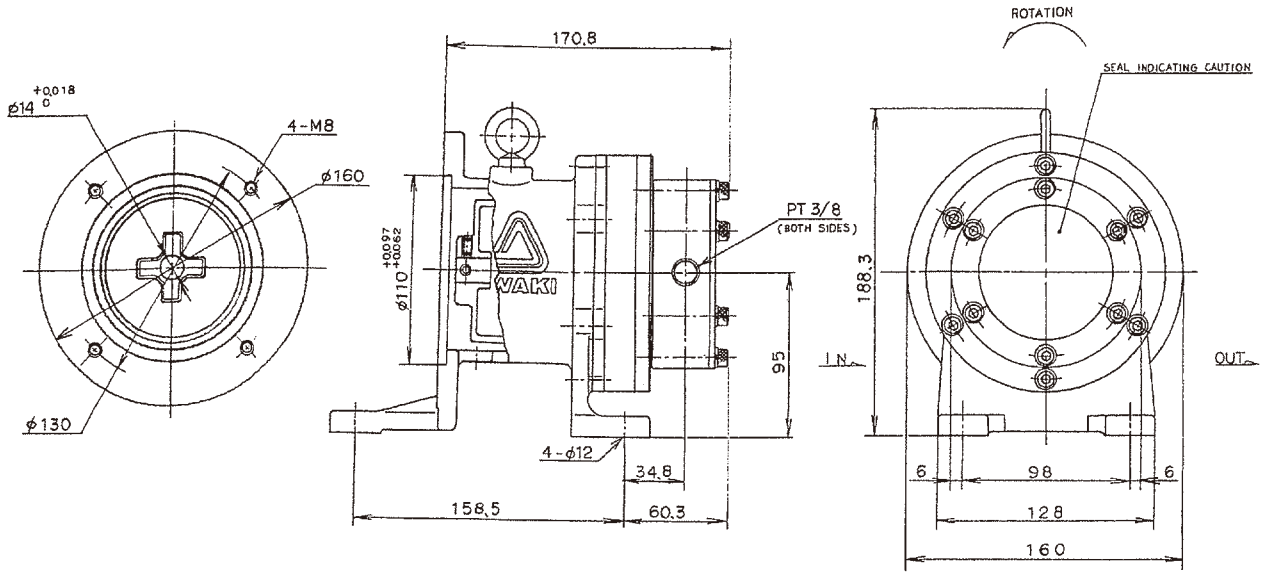

6.6kg

1-6. Description of Parts and Exploded View

⚠ CAUTION

Do not wipe the nameplate, label, or pump body with a solvent-soaked cloth when cleaning the pump unit.

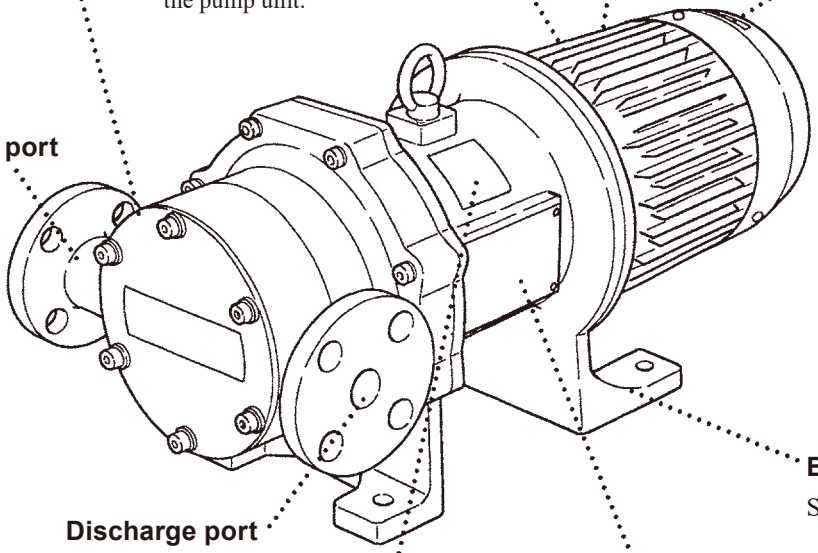

Pump unit (Liquid feeding section)
Self-priming pump: Supply priming water through the suction port before operating the pump.

Motor specifications nameplate
Apply the power source voltage indicated on this nameplate only.
(Observe the local regulations when the pump is operated out of Japan.)

Motor (Driving section)
This motor provides power to the pump unit.

"Arrow" indicator label
The arrow indicates the rotating direction of the motor. Always make sure that the motor runs in the direction the arrow indicates.
(Refer to "Preparation for start-up [7]" in the "Pump Operation" chapter.)

Suction port

Base (bracket)
Setting should be fixed.

Discharge port

Pump specifications nameplate
Operate the pump only within the pump specifications. Do not allow the discharge pressure to exceed the with standable pressure limit.

"Do not run pump dry" label
Operation of the pump without liquid may damage the inside of the pump. Be careful not to run the pump dry.

1-7. Names of Parts

■ **GM-25VK __-07F**

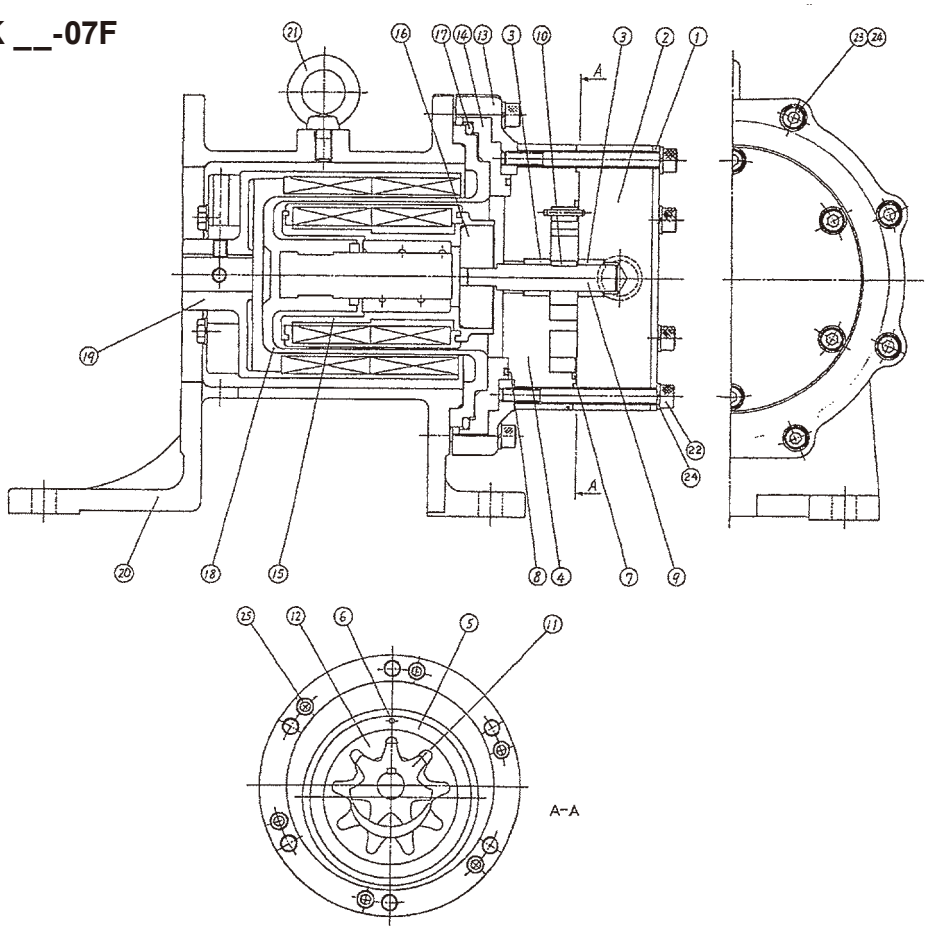

No.	Parts Name	Q'ty	Material	Remarks
1	FRONT PLATE	1	STNLS STL	
2	PORT HOUSING	1	PVC	
3	BEARING	2	HIGH DENSITY CARBON or SILICON CARBIDE	
4	GEAR HOUSING	1	PVC	
5	BEARING	1	HIGH DENSITY CARBON or SILICON CARBIDE	
6	PIN	1	ALUMINA CERAMIC 99.5%	
7	O-RING	1	FKM or EPDM	JIS B 2401 G 95
8	O-RING	1	FKM or EPDM	JIS B 2401 G 105
9	SHAFT	1	SILICON NITRIDE	
10	KEY	1	VINYL ESTER+CF	
11	PINION	1	SILICON CARBIDE	
12	INTERNAL GEAR	1	SILICON CARBIDE	
13	SUB-BRACKET	1	FC200	
14	SEAL RING	1	PVC	
15	MAGNET CAPSULE ASS'Y	1	FERRITE+CFRETFE	
16	DRIVE BOSS	1	PVC	
17	O-RING	1	FKM or EPDM	JIS B 2401 G 160
18	REAR CASING	1	CFRETFE+ALMINA CERAMICS 99.5%	
19	DRIVE MAGNET ASS'Y	1	FERRITE+ALUMINUM ALLOY, STEEL	
20	FOOT SUPPORT	1	FC200	
21	EYE BOLT	1	STEEL	M 10
22	HEX. SOCKET HEAD BOLT	6	STNLS STL	M 8 × 90
23	HEX. SOCKET HEAD BOLT	8	STNLS STL	M 8 × 40
24	SW	14	STNLS STL	M 8
25	HEX. SOCKET HEAD BOLT	6	STNLS STL	M 5 × 35

■ GM-15VK __-04F

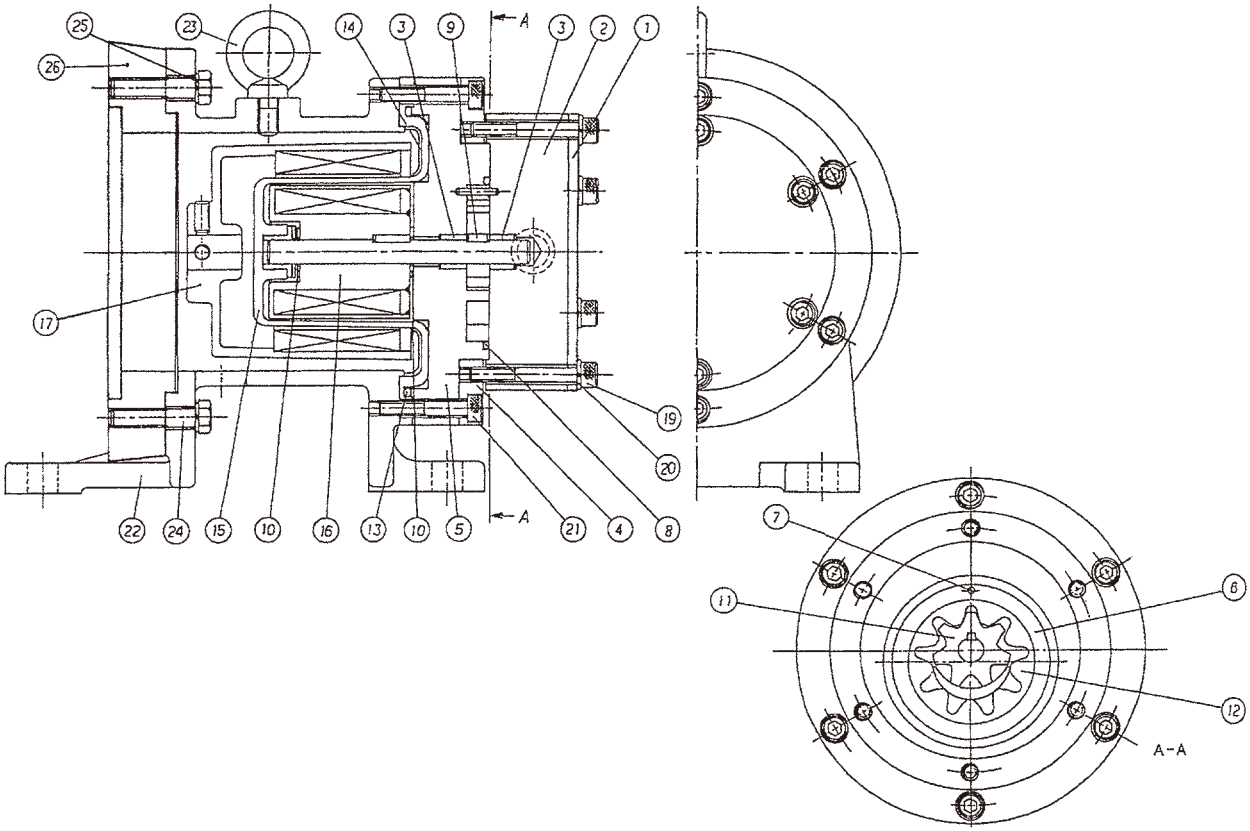

No.	Parts Name	Q'ty	Material	Remarks
1	FRONT PLATE	1	STNLS STL	
2	PORT HOUSING	1	PVC	
3	BEARING	2	HIGH DENSITY CARBON or SILICON CARBIDE	
4	SUB BRACKET	1	S45C	
5	GEAR HOUSING	1	PVC	
6	BEARING	1	HIGH DENSITY CARBON or SILICON CARBIDE	
7	PIN	1	ALUMINA CERAMIC 99.5%	
8	O-RING	1	FKM or EPDM	JIS B 2401 G 65
9	KEY	1	VINYL ESTER+CF	
10	SPACER	1	PTFE+GF	
11	PINION	1	SILICON CARBIDE	
12	INTERNAL GEAR	1	SILICON CARBIDE	
13	O-RING	1	FKM or EPDM	AN6230-22
14	REINFORCING RING	1	STNLS STL	
15	REAR CASING	1	CFRETFE+SILICON CARBIDE	
16	MAGNET CAPSULE ASS'Y	1	FERRITE+PVC, VINYL ESTER+CF,Si3N4	
17	DRIVE MAGNET ASS'Y	1	FERRITE+ALUMINUM ALLOY, STEEL	
19	HEX. SOCKET HEAD BOLT	1	STNLS STL	M 6 × 45
20	SW	1	STNLS STL	M 6
21	HEX. SOCKET HEAD BOLT	1	STNLS STL	M 6 × 35
22	FOOT SUPPORT	1	FC200	
23	EYE BOLT	1	STEEL	M 8
24	HEX. SOCKET HEAD BOLT	8	STNLS STL	M 8 × 35
25	SW	14	STNLS STL	M 8
26	MOTOR ADAPTOR	1	SS400	

2. PUMP OPERATION

2-1. Handling Instructions 16

2-2. Installation 18

2-3. Piping 20

2-4. Wiring 23

2-5. Operation Step 23

2-1. Handling Instructions

(Observe all the following instructions to prevent injuries and accidents.)

⚠ Warning

- **Do not operate the pump for the circulation of hazardous mediums (such as explosive, combustible, flammable, or toxic substances, as well as corrosive or irritating substances considered harmful to human health).**

⚠ Caution

- **Read the following information prior to installing the pump.**
- **Protective wear:**
  When operating the pump or working near it, with the pump system loaded with chemical liquid, always wear protective clothing, face guard, goggles, and gloves. Further precautionary measures must be taken depending upon the type of liquid used.
- **Operating the pump dry (without supplying liquid to it) may cause seizure or wear of the inside of the pump section.**
- **Pump repair beyond the range specified in this instruction manual:**
  Do not try to disassemble or repair the pumps by yourself.

[1] Handle the pump carefully.

Strong impacts caused by dropping the pump on the floor or striking it may result in damage or faulty performance.

[2] Priming water

Be sure to fill the pump unit with feeding liquid as priming water before pump operation.

[3] Do not operate the pump in the following places.

- Places where the temperature falls below 0ºC.
- Places where corrosive gas or explosive gas is generated.
- Places exposed to splashing water.
- Places where the ambient temperature is 40ºC or above.
- Places where the humidity is excessively high. (Permissible humidity: 35˜85%RT)
- Places filled with or likely to be filled with explosive or corrosive atmosphere.
- Danger due to dust, fire, earthquake and/or any externally imposed shock.

[4] Keep the pump away from fire.

To prevent fire and explosions, do not place dangerous or inflammable substances near the pump.

[5] If pump is damaged

Do not operate a damaged pump, otherwise there may be electricity leakage or electric shocks.

[6] No modify

Never try to modify the pump. This may cause a serious accident or damage.

[7] No disassembly or repair

Users are allowed to disassemble and repair the pump to the degree of the given description in "Disassembly and Assembly" in this manual.

* The pump must be repaired by trained and qualified operators only. When it needs to be disassembled and repaired, stop operation and contact the supplier for advice.

[8] No dry running operation

Dry operation of the pump (pump operation without liquid inside) may cause damage to the pump internally. Never operate the pump dry. If the pump is operated dry or with the suction-side valve closed, damage may result.

* Countermeasures to be taken in case of dry operation
  1. Turn off the power switch of the pump immediately and leave the pump as it is for more than 1 hour.
  2. Prime the pump and fill the pump with liquid.
     (Note that the pump should be supplied with liquid after leaving the pump empty for more than 1 hour. A sudden supply of liquid may cause cracks in a part due to quenching effects.)

[9] Points to be noted when starting and stopping pump

Pay close attention to the following points to avoid damage when starting and stopping pump operation.

(1) When starting the pump, first prime it. Then, open the discharge valve completely and turn on the power switch. After starting up the pump, close the discharge valve gradually and set it to the desired operation level within the limits of 0.5MPa.

(2) When stopping the pump, first open the discharge valve slowly. Turn off the power switch only after completely opening the discharge valve.

⚠ Caution

• In this procedure, never try to stop the pump quickly using a solenoid valve, etc. Quick closure may cause water hammer action, and the excessive pressure will destroy the pump.

[10] Allowable pressure limit

The allowable pressure (the suction pressure) limit of all models is 0.3MPa. The discharge pressure limit of all models is 0.5MPa.

[11] Use of slurry liquid

Slurry liquid pumping is absolutely not possible.

[12] Influence of viscosity of liquid on pump performance

If the viscosity of the liquid is different than that of pure water, the discharge volume, and pump head may vary. The delivered pump has been prepared to meet the specifications ordered by the user. To change the operating conditions after delivery, be sure to contact the supplier.

[13] Temperature humidity fluctuation

► Liquid temperature range: 0-50ºC (pure water)
► Ambient temperature range: 0-40ºC
► Humidity range: 35-85% RH

The liquid may change in terms of its viscosity, pressure, or corrosion resistance. Pay special attention to changes in liquid characteristics as a result of temperature fluctuation.

[14] Disengagement of magnet coupling

Though the motor is running, the liquid is not circulated. (The pressure gauge on the discharge side points to "0" point approximately.)

When the magnet coupling disconnects, stop the pump within 1 minute. If operation is continued with the coupling in the disconnected mode, the power of the coupling will decrease considerably.

Always start the GM-V pump using an inverter (VFD). Full-voltage starting can cause the magnetic coupling to decouple, resulting in abnormal operation.

2-2. Installation

[1] Installation position

• Install the pump as close to the suction tank as possible and in the lowest position available (for flooded suction).

*The lift head depends upon the liquid properties, temperature, and length of the suction piping. For details of the setup, consult Iwaki or your dealer.

[2] Indoor and outdoor use

The pump can be operated either indoors or outdoors. However, safety measures should be taken so as not to expose the motor and power distribution unit to flooding or other natural hazards.

[3] Installation site

Select an installation site that is flat and free of vibrations caused by nearby machines. Space sufficient for maintenance work should be provided.

■ Lifting

When lifting the pump, please pay attention to the following points.

Pump must be lifted horizontally using two bolts located at pump and motor.

In the case that there is no lifting bolt at the motor, rope or such kind materials should be securely fastened to the motor to lift the pump horizontally.

Please use lifting chain or rope which has enough strength similar to handle pump weight.

To prevent any bodily harm caused by the pump falling, keep clear of the lifted pump.

■ Foundation preparation (before pump installation)

[1] The area for anchoring the pump must be greater than the area of the base. If the anchoring area is not enough, the base may be destroyed due to a concentrated load on it.

[2] If pump operation is to be subject to vibration (resonation with the piping, for example), provide an expansion joint between the pump and the piping. Otherwise, the piping, gauge, etc., may be damaged.

[3] Installation advice

- Use anchor bolts to fasten the pump base firmly.
- Install the pump horizontally.
- Sufficient space is required to allow cool air from the motor fan to circulate.
- Allow ample space around the pump for easy and efficient maintenance work.

2-3. Piping

The piping for PT and NPT screw connection types should be made in a manner that no excessive force is applied to the screw sections.
The piping for the flange connection type is easily damaged if excessive force is applied. Arrange supports for the piping in a position which is closest to the connected flange as possible and try not to load the flange with excessive force.

Example of piping

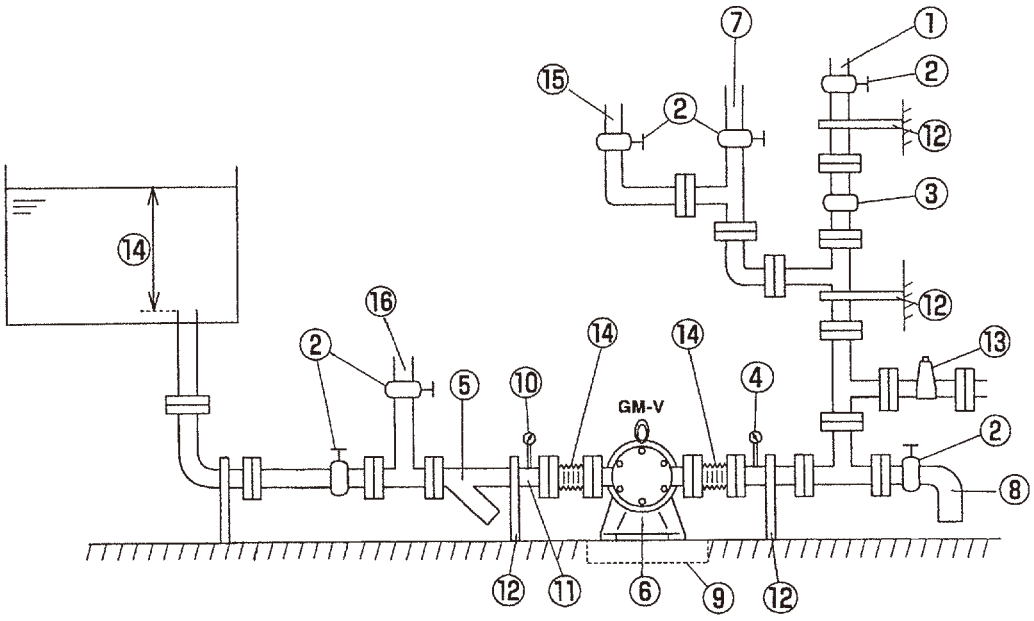

(1) Discharge pipe (Support the pump to keep the pump free of piping load.)
(2) Valve
(3) Check valve
(4) Pressure gauge
(5) Strainer
(6) Pump
(7) Priming/air vent pipe
(8) Drain pipe
(9) Drain trough
(10) Vacuum gauge
(11) Suction pipe (pipe diameter : D)
(The horizontal section should be as short as possible and there should be an ascending gradient of 1/100 toward the pump.)
(12) Pipe support
(13) Relief valve
(14) Expansion joint or flexible joint
(15) Piping for flushing (Discharge side)
(16) Piping for flushing (Suction side)

■ Suction piping

[1] The suction pipe should employ the flooded suction method if possible. The shortest pipe possible, with the minimum number of bends, should be used. Arrange a proper support under the suction pipe such as an expansion joint or the like so that the weight and thermal stress of the pipe are not applied to the pump.

[2] The suction port on the pump is made of PVC. In order not to apply stress to the port and to protect the port, use an expansion joint or a flexible joint to connect with the piping. Arrange a pipe support in the closest position to the pump as possible.

[3] Attach the coupling on the suction pipe carefully so as not to allow air inside the line. Air in the suction pipe may damage the system.

[4] If suction is not good (e.g., the suction tank is a vacuum, the suction head is large, or the suction pipe is long), the condition NPSHa > NPSHr + 0.5 m should be established. For the NPSHr level, refer the following.
NPSHr GM-15V : 2m
GM-25V : 3m

[5] Do not allow any projection where air may be trapped along the suction pipe. The suction pipe should have an ascending gradient of 1/100 toward the pump.

[6] If the diameters of the pump suction port and the suction pipe are different, use an eccentric reducer pipe. Connect the eccentric reducer pipe so that the upper surface is level. In any case, never use a suction pipe with a diameter smaller than that of the suction port.
The diameter of the suction pipe must be larger than that of the pump suction port.

[7] It is also recommended, in the case of flooded suction, that a gate valve be installed on the suction pipe for easier overhaul inspection of the pump. Keep the gate valve fully open during ordinary pump operation; it is required to be closed only during an overhaul inspection.

[8] When circulating a dangerous liquid, arrange the flushing pipes so that internal cleaning is possible when disassembling the pump.

[9] The end of the suction pipe should be located 500 mm or more below the surface of the liquid.

[10] A screen should be provided at the inlet in the suction tank to prevent the entry of foreign matter into the suction pipe. The end of the suction pipe should be 1˜1.5 D (D: diameter of suction pipe) or more away from the bottom of the suction tank. Note that the entry of foreign matter may cause the pump to malfunction.

[11] In the case of the suction lift method, install a foot valve on the suction pipe.

[12] This pump cannot be used in the feeding of slurry regardless of the particle size. Even if the liquid itself has no slurry content, burrs, welding or bonding waste matter generated during piping work, or pipe scale, or any other foreign matter, crystallized substances accumulated inside the tank may enter and damage the inside of the pump. In order to prevent the entrance of such substances as mentioned above, do not forget to install a strainer immediately before the suction port.

Note: The items [9], [10], and [11] above are applied to the suction lift method.

■ Discharge piping

[1] Use a support so that the weight of the pipe is not applied to the pump.

[2] If a method other than flooded suction is employed, install a priming pipe.

[3] If the pipe is too long the piping resistance may increase, hampering the pump's performance. The diameter of the pipe should be determined by calculating the piping resistance.

[4] A check valve should be installed if any one of the following conditions is present. When selecting the check valve, consider the check valve pressure limit (including the influence of water hammer or back flow onto the pump).

① The discharge piping is very long
② The discharge lift exceeds 15 m
③ The end of the discharge pipe is 9 m higher than the surface of the suction tank
④ Several pumps are connected parallel to one another on the same piping

[5] Install a relief valve on the discharge side. If the gate valve on the discharge side is closed by a misoperation during the pump operation or if the inner pressure of the piping is raised due to some abnormal condition, the max. discharge pressure guaranteed for the pump may be exceeded which will result in damage to the pump.

[6] Do not fail to install a pressure gauge on the discharge piping.

[7] Install an air bleeding valve if the discharge pipe is very long horizontally.

[8] Install a drain valve for the drainage of liquid if there is a chance that the liquid in the discharge pipe might freeze.

■ Piping load and momentum

Try not to apply heavy load to the pump inlet and outlet flanges. Permissible piping weight and moment to the pump are as below.

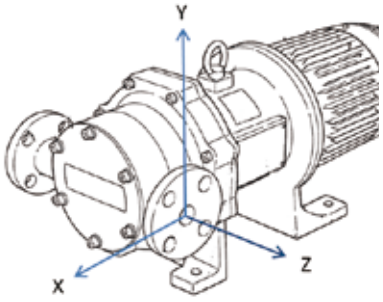

Permissible stress to inlet & outlet flanges

Load direction	Load N	
	GM-15V	GM-25V
Fx	46	94
Fy	68	110
Fz	22	52

Permissible moments to inlet & outlet flanges

Load direction	Moment N•m	
	GM-15V	GM-25V
Mx	23	47
My	34	55
Mz	11	26

2-4. Wiring

Electrical connections

ATTENTION



The electrical connection should be carried out by an authorized electrician in accordance with local regulations. Please make sure that the electrical data on the nameplate of the motor correspond to the electricity supply on which it will be used. Motors must be connected to a motor protection switch.

[1] Use an electromagnetic switch that conforms with the specifications (voltage, capacity, etc.) of the pump motor.

[2] If using the pump outdoors, waterproof the wiring to protect the switches from rainwater.

[3] Electromagnetic switches and push buttons should be installed reasonably distant from the pump.

[4] Use an inverter with the GM-V pump and observe the following precautions.
- Use a motor and inverter supplied by the same manufacturer.
- Purchase separately anchored bolts to fix the base.
- Use an inverter-compatible motor (constant torque motor) or an IE3 motor.
- Min frequency is 6 Hz in general, but 3Hz is also available for the inverter with the vector control. Depending on your system, 3Hz or lower frequency is possible. Contact us for detail.
- Max. allowable frequency is 60 Hz for a 4-pole motor.
- When using an inverter in low frequency atmosphere, the current value may exceed the motor's rated value. If possible, change the V/F control to the vector control.
- Use a noise filter or AC line reactor with the inverter. Refer to the instruction manual of the inverter.
- When controlling the flow capacity precisely, ensure that an flow meter, inverter and controller are used together.

2-5. Operation Step

■ Operation instructions

[1] Never operate the pump dry or with the suction-side valve (gate valve) closed. Otherwise, the inside of the pump will be damaged.

[2] In the event of cavitation, stop the pump within a minute.
In addition, do not continue pump operation with the air mixed into the suction side.

[3] If the magnet coupling disconnects, stop the pump within a minute. The power of the magnet coupling is reduced if operation is continued with the coupling disconnected.

[4] The temperature fluctuation should not exceed 50ºC through the operational modes of starting, stopping, and operating the pump.

[5] Before starting operation, open the discharge valve fully to prevent damage to the inside of the pump.

[6] In the event of a service power failure, turn off the power switch immediately and close the discharge valve.

[7] Make sure that intolerable pressure levels are not applied to the pump. Refer to "page 17 [10] Allowable pressure limit" in "3-1. Handling Instruction."

Model	Liquid temp (ºC)	Maximum surface temperature when ambient temperature is at 40ºC	Rated speed (min^{-1})
GM-15V	50	80	1800
GM-25V			

[8] Sound generated by pump
The level of sound generated by each type of pump is shown in the table. Arrange muffling measures in accordance with the sound level. The procedure for sound measurement conforms to the EN 31201 (ISO11201).

dB (A)

Model	GM-15V	GM-25V
Sound Level	75	75

■ Preparation for start-up

Preparations should be made, as described below, in the case of the initial operation after installation and in the case of restarting of operation after a long period of inactivity.

[1] Thoroughly clean the inside of the pump and pipe. Then, supply liquid.

[2] Tighten the flange connecting bolts and the installation bolts on the base.

[3] Turn the motor fan by means of a screwdriver or similar tool to see if it can be turned lightly.

[4] Open the suction and discharge valves fully.

⚠ The pump should never be operated empty or while the valve on the outlet side is closed. This may damage the inside of the pump.

[5] Prime the pump. Do not fail to prime it when the pump is run for the first time after its installation or after it is repaired.

[6] Since the pump has been tested by the application of clear water prior to shipment, there may be some water remaining in it. Should it have an adverse effect on the functioning of the system, flush the pump using the liquid to be handled.

[7] Run the motor instantaneously to check for correct direction of motor rotation. The motor should run in the direction indicated with the arrow on the pump. The pump should rotate clockwise when viewed from the driving side. If the direction is reversed, exchange any two wires of the three-phase power wires.

[8] When using pure water or ultrapure water, contact us before use. These liquids provide insufficient lubrication for sliding parts, which may result in pump failure.

■ Operation

Operate the pump by following the steps given below.

No.	Operation Step	Remarks
1	• Open the valve	• Suction valve - Fully opened • Discharge valve - Fully opened
2	• Prime the pump	• Confirm pump is filled with liquid. If pump is not filled with liquid, fill it in accordance with steps [4] and [5] of 'Preparation for start-up'.
3	• Check the motor for correct rotating direction. Switch on the power and then immediately switch off the power.	• Supply power immediately to run the pump only when checking the rotating direction of the pump. (Correct direction of pump operation is indicated with arrow on the pump. Check the direction of motor fan by looking at the fan through the fan cover.) • Observe carefully to see if the motor fan slowly and smoothly stops rotating when the power switch is turned off. Note: If the motor fan does not stop smoothly, it is possible that the pump is locked inside. In this case, contact your Iwaki dealer.
4	• Turn on the power and start the pump. Then, adjust the discharge pressure and discharge volume. **⚠ Caution** **Do not run pump against a closed discharge valve.**	• Close discharge valve carefully while paying attention to the ammeter, to prevent motor from being overloaded from excessive opening of valve. * Close the discharge valve gradually and adjust the discharge pressure while checking the reading of the pressure gauge on the discharge side. (Otherwise, adjust the flow rate while checking the reading of the flowrate meter.)
5	Points to be observed during operation. If pump enters continuous operation mode, check flow meter and confirm that pump operation is as per specifications.	• If flow meter is not available, check the values of discharge pressure, suction pressure, and electric current with reference to piping resistance.

■ Stoppage

No.	Check/Operation Step	Remarks
1	• Full open discharge valve gradually.	**⚠ Caution** **If the discharge valve is closed accidentally during the operation, the inner pressure of the pump increases abruptly to damage the pump or cause the malfunction of the pump.**
2	• Turn off the power and stop pump operation.	• Observe carefully whether the motor fan slowly and smoothly stops rotating. **⚠ Caution** **If not, check inside of pump.**
3	Points to be observed when stopping pump • If the pump operation is stopped during cold weather, liquid in pump may freeze and damage pump. When circulating a dangerous liquid, carry out internal cleaning by using flushing piping. Then drain the liquid fully. • Be sure to remove all liquid after stopping pump. In case of short-term suspension of operation, which does not allow for removal of liquid, use band heater, etc., to prevent liquid inside from freezing. Since the pump body is made of PVC, do not heat the pump higher than 50ºC to prevent deformation of the pump. • In event of power failure, turn off power switch and close discharge valve.	

3. MAINTENANCE

3-1. Causes of Trouble and Troubleshooting 28

3-2. Consumable Parts 29

3-3. Disassembly and Assembly 30

3-1. Causes of Trouble and Troubleshooting

Problem	Symptom	Cause	Remedy
Liquid is not discharged.	Motor does not rotate.	• Defective wiring • Fuse on power source has gone. • Motor coil has broken. • Adhesion of shaft seal portion. • Pinion and internal gear have adhered to gear housing or broken. • Liquid has frozen. • Overload • Foreign matter is has jammed the pump.	• Rewire. • Put in new fuse. • Replace it with new motor. • Disassemble and wash. • Disassemble and wash or replace. • Melt it. • Check wiring (Please call us). • Clean it.
	Both motor and pump revolve.	• Valve in piping is closed. • Piping is blocked by foreign matter. • Pump has rotated in reverse. • Viscosity is too high for liquid to get into pump. • Air gets in through suction pipe, or air cannot be let out. • Liquid does not get into pump (in case of suction system). • Gear or key is damaged.	• Open valve. • Clear it. • Rewire. • Increase height of space which pump is pressed in or increase diameter of piping. • Redo piping. • Prime pump. • Replace it.
	Motor rotates but pump does not.	• Magnet coupling is disconnected. • Overload	• Eliminate cause. (foreign matter or overload.) • Check piping (Please call us).
Decrease in discharge.		• Gear housing or port housing is worn out. • Air leaks from feed pipe. • Solid substance stuck in suction pipe or discharge pipe to reduce piping diameter. • rpm lowered by voltage drop. • Gear is damaged.	• Replace it. • Redo piping. • Clean it. • Check voltage and take necessary measure. • Replace it.
Liquid leaks.		• Defective O ring or gasket	• Replace it.
Motor overheats.		• Overload applied to motor. • Voltage drops. • Overload • Ambient temperature is high.	• Check piping (Please call us). • Check voltage and take necessary measure. • Check whether voltage or frequency is suitable. • Check whether specific gravity and /or viscosity is suitable. • Check whether gears are locked or motor fan is rotated easily by screwdriver. • Improve ventilation.
Abnormal sound or vibration		• Defective installation • Bearing is worn out. • Suction pipe is blocked/cavitation is caused. • Magnet can or shaft is damaged. • Drive magnet is out of balance. • Magnet coupling is disengaged. • Motor is defective. • Foreign matter is lodged in or gear is damaged.	• Check and adjust. • Repair or replace. • Clean. Eliminate cause of cavitation. • Replace it. • Replace it. • Stop operation. (See "pump does not revolve" column above). • Replace it. • Check and replace.

3-2. Consumable Parts

The parts mentioned in the list as below are consumable parts. To ensure the long time operation of pump, replace them at every 10,000 hours running time. (The 10,000 hours are based on pumping clear water at ambient temperature and it depends on the characteristics of pumped liquid and other condition.)
O ring must be replaced every time when pump is disassembled regardless of the 10,000 hours running time.

Pump Type	Part No.	Name	Number	Material	Serial No.	Weight (g)
					PT screw type (– I)	
GM-15V	2+3 (102)	Port housing ass'y	1	PVC, CARBON	G0286	417
			1	PVC, SiC	G0288	418
	5+3 (105)	Gear housing Unit	1	PVC, CARBON	G0234	379
			1	PVC, SiC	G0254	380
	6	Bearing	1	CARBON	G0019	18
			1	SiC	G0018	29
	8	O ring	1	FKM	G0236	3
			1	EPDM	G0237	2
	9	Key	1	PVC	G0238	0.5
	10	Spacer	2	PTFE+GF	G0239	0.5
	11	Pinion	1	SiC	G0240	13
	12	Internal gear	1	SiC	G0013	24
	13	O ring	1	FKM	G0241	6.7
			1	EPDM	G0242	6
	15	Rear casing	1	CFRETFE, SiC	G0244	131
	16	Magnet capsule ass'y	1	PVC Si_3N_4, etc	G0245	406
GM-25V	2+3 (102)	Port housing ass'y	1	PVC, CARBON	G0290	958
			1	PVC, SiC	G0292	961
	4+3 (104)	Gear housing Unit	1	PVC, CARBON	G0257	775
			1	PVC, SiC	G0283	740
	5	Bearing	1	CARBON	G0258	55
			1	SiC	G0068	88
	7	O ring	1	FKM	G0260	4
			1	EPDM	G0261	3
	8	O ring	1	FKM	G0262	5
			1	EPDM	G0263	3
	9	Shaft	1	Si_3N_4	G0264	48
	10	Key	1	PVC	G0265	1
	11	Pinion	1	SiC	G0064	47
	12	Internal gear	1	SiC	G0063	98
	15	Magnet capsule ass'y	1	CFRETFE, CARBON	G0268	1286
			1	CFRETFE, SiC	G0284	1247
	16	Drive boss	1	PVC	G0269	56
	17	O ring	1	FKM	G0270	25
			1	EPDM	G0271	14
	18	Rear casing	1	CFRETFE, Al_2O_3	G0272	698

3-3. Disassembly and Assembly

⚠ Caution

- Since the magnet used in the pump is very powerful, be careful not to get your fingers caught between the elements during the disassembly and assembly processes. Also, pay attention to prevent metal pieces or metal powder from adhering onto the pump.
- Do not bring any electronic device that may be impacted by strong magnetic power into the pump magnetic field.
- Prior to disassembly or assembly, close the suction valve and discharge valve fully.
- The piping and the pump often retain liquid. When a dangerous liquid is handled, wear protectors (goggles, rubber gloves, etc.) when disconnecting the pipes.

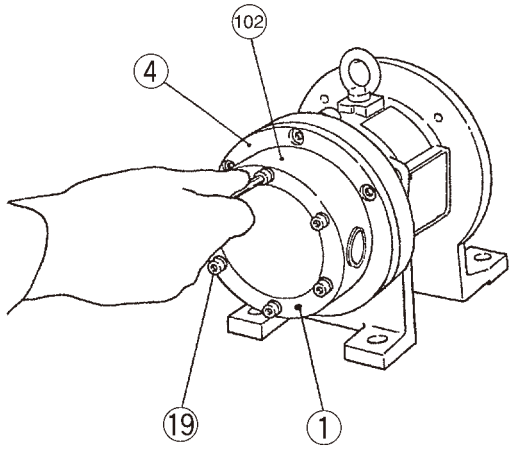

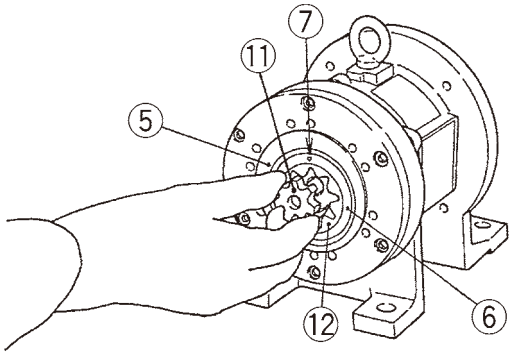

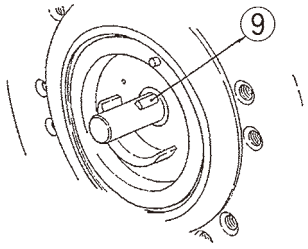

■ Disassembly

<GM-15V>

[1] Remove the port housing ass'y from the sub-bracket.

Remove the hex socket bolts (19) and take out the cover (1) and the port housing ass'y (102) straight from the sub-bracket (4).

Be careful with the bearing which remains pressed into the port housing ass'y.

⚠ Caution

Strong impacts may crack the bearing, gears or the magnet capsule ass'y.

Do not strike them with tools, etc.

⚠ Warning

Wear protectors (goggles, rubber gloves, etc.).

Certain liquids are dangerous. They may hurt your eyes and skin.

[2] Remove the gears, the key, and the bearing from the gear housing.

Pull out the pinion (11) from the shaft of the magnet capsule ass'y.

⚠ Caution

The pinion is made of ceramic material. If you find it hard to remove the pinion, do not apply excessive force onto it. Instead, contact your dealer nearby.

Remove the key (9) from the shaft. Remove the internal gear (12) from the bearing (6).

Pull out the pin (7) and remove the bearing (6) from the gear housing (5). If you find it hard to remove the bearing, follow step [3] to remove the gear housing and place it in hot water at approx. 50ºC to ease the removal.

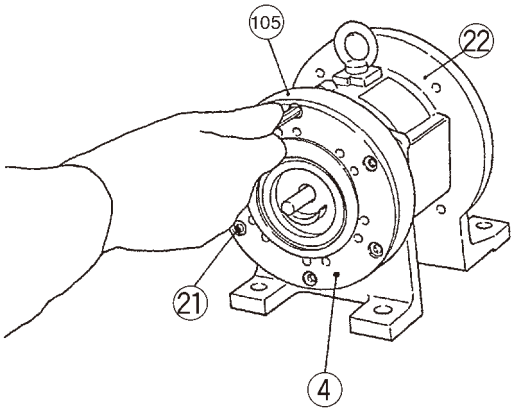

[3] Remove the gear housing unit from the foot support.

Remove the hex socket bolts (21) and take out the sub-bracket (4) from the gear housing unit (105). Pull the gear housing unit forward from the foot support (22).

* Pay extra attention not to scratch the bearing surface which remains pressed into the gear housing unit with the tip of the magnet capsule ass'y shaft.

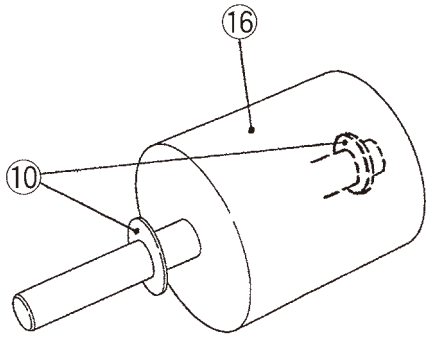

[4] Pull the magnet capsule ass'y out horizontally toward yourself.

Do not forget to remove each spacer (10) inserted on the shaft before and after the magnet capsule ass'y (16).

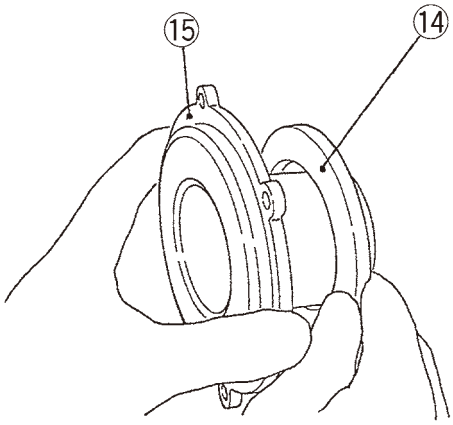

[5] Remove the rear casing.

Remove the reinforcing ring (14) inserted between the rear casing (15) and the foot support.

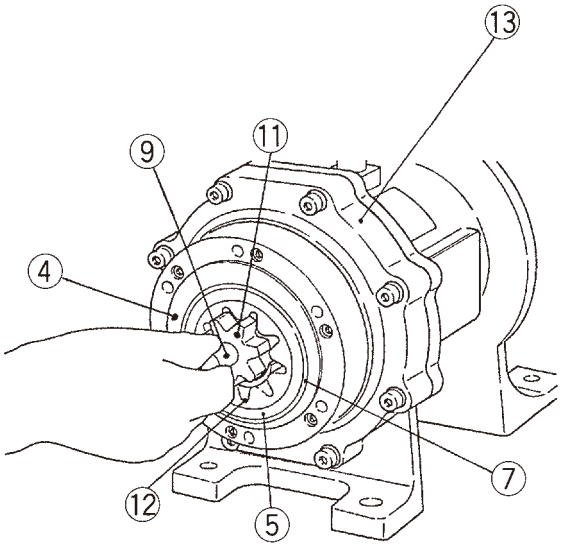

<GM-25V>

[1] Remove the port housing ass'y from the sub-bracket.

Remove the hex socket bolts and take out the cover and the port housing ass'y straight from the sub-bracket (13).

Be careful with the bearing which remains pressed-fit in the port housing ass'y.

⚠ Caution

Strong impacts may crack the bearing, gears or the magnet capsule ass'y.

Do not strike them with tools, etc.

⚠ Warning

Wear protectors (goggles, rubber gloves, etc.).

Certain liquids are dangerous. They may hurt your eyes and skin.

[2] Remove gears, the shaft, the key, and the bearing from the gear housing unit.

Remove the shaft (9) from the gear housing (105). The pinion (11) and the key can be removed together with the shaft. In order to remove the pinion from the shaft, hit the key lightly so as not to damage it and loosen the engagement of the pinion in the key groove. Note the pinion and the shaft are made of ceramic material and should be handled carefully to avoid damaging them. If you find it hard to remove them, do not apply excessive force onto them. Instead, contact the dealer nearest you. When the pinion is removed, the key can be removed easily, too. Remove the internal gear (12), bearing (5), and O ring (7) from the gear housing (4). If you find it hard to remove the bearing, follow the steps mentioned earlier to remove the gear housing and place it in a hot water which is approx. 50ºC to ease the removal.

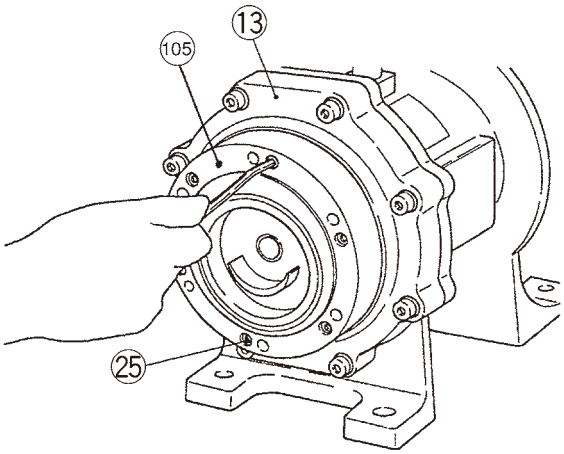

[3] Remove the gear housing unit from the sub-bracket.

Remove the hex socket bolts (25) and take out the gear housing unit (105) from the sub-bracket (13). Be careful not to scratch the surface of each parts. Be careful not to scratch the surface of each part. If you find it hard to remove the gear housing unit, hit the perimeter of the gear housing unit lightly with a resin hammer.

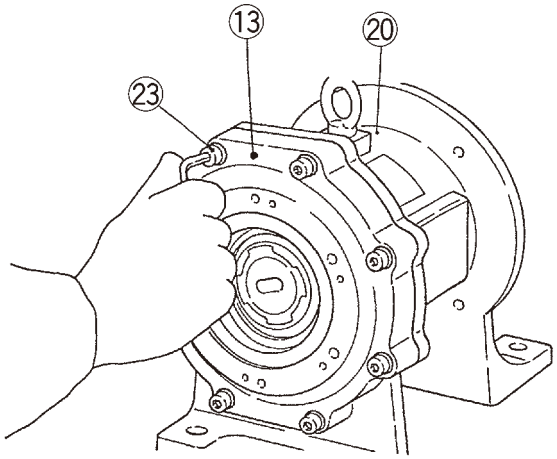

[4] Pull out the magnet capsule assembly out toward yourself.

Remove the hex socket bolts (23) and take out the sub-bracket (13) from the foot support (20).

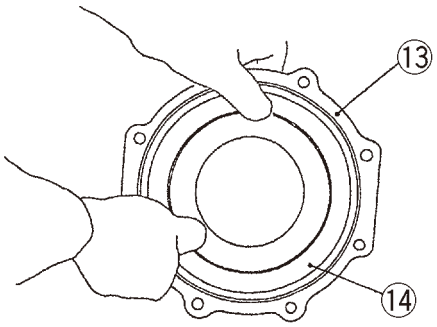

The seal ring (14) is inserted inside the sub-bracket and is removed together with the sub-bracket (13). Be careful not to scratch the sealing surface of the seal ring when removing the sub-bracket.

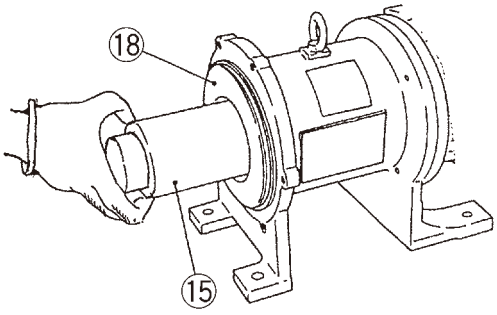

Remove the magnet capsule ass'y (15) from the rear casing (18).

Since the magnet capsule is strongly magnetized, store it in a place free of metal pieces or metal powder. Handle the magnet capsule ass'y with extra care so as not to scratch the sliding surface.

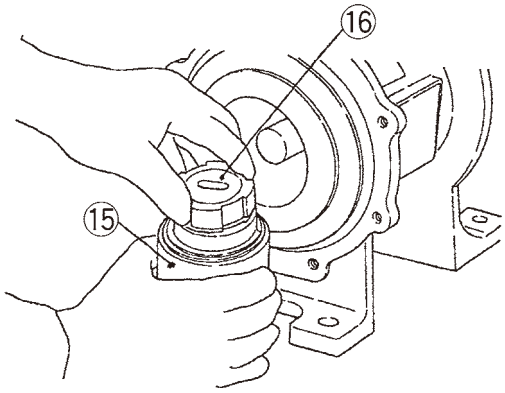

The drive boss (16) is press-fitted inside the magnet capsule ass'y (15).
In order to remove the drive boss from the magnet capsule ass'y, push the boss from the other end of the magnet capsule ass'y. In this step, be careful not to scratch the surface of the bearing which is inserted inside.

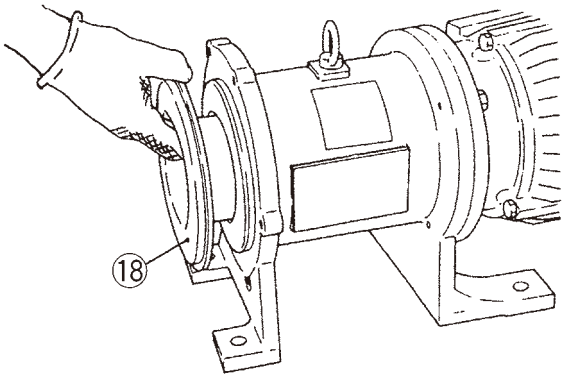

[5] Remove the rear casing.

Insert a flat-head screwdriver into the perimeter of the rear casing (18) and pull the rear casing forward while lifting it slightly up.

* Pay extra attention not to scratch the sealing surface.

■ Assembly

The pump should be assembled by carrying out the steps of disassembly in reverse. Pay attention to the following points.

- Replacement of O ring and gasket

  When replacing the O ring or gasket, be sure to install a new one. In addition, see that the O ring or gasket is not twisted or pressed by another part.

  * The sealing section should be cleaned free of dust or scratches before installation.

- Replacement of rear casing (GM-15M)

  If the reinforcing ring is inserted improperly between the rear casing and the foot support, a space will be created between them. Attach the reinforcing ring properly when mounting the rear casing onto the foot support.

- Replacement of magnet capsule ass'y

  The magnet capsule ass'y is pulled by the strong magnetic force of the drive magnet. Be careful not to get your fingers caught by the part. In addition, if the magnet capsule ass'y is released down into the rear casing as pulled by the magnet force, the bearing inserted in the rear casing may be damaged. Hold the magnet capsule ass'y or the shaft firmly and place the capsule ass'y carefully in place.

- Replacement of sub-bracket (GM-25V)

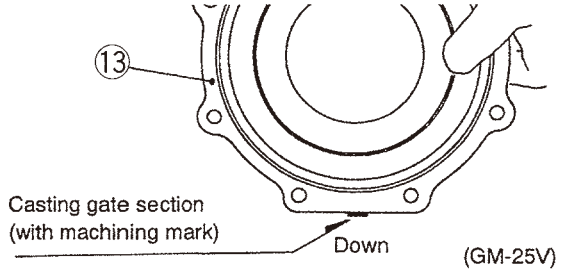

Install the sub-bracket with the casing gate section (a rough protruding section) positioned at the bottom.
If the position is wrong, the sub-bracket !3 cannot be attached onto the foot support due to the sensitive positioning of the bolt holes.

- Replacement of gear housing

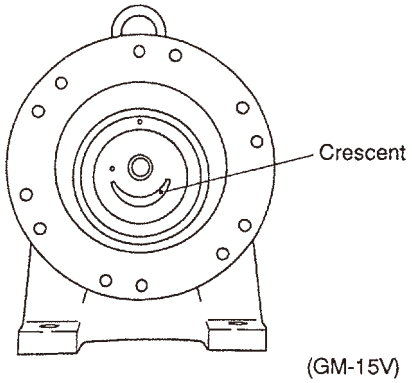

Attach the gear housing with the crescent positioned at the bottom.

- Replacement of bearing

Note the front and rear sides of the SiC-made bearing only are different from each other.
Attach the bearing with the notched section of the bearing positioned in relation to the crescent as shown in the figure below.

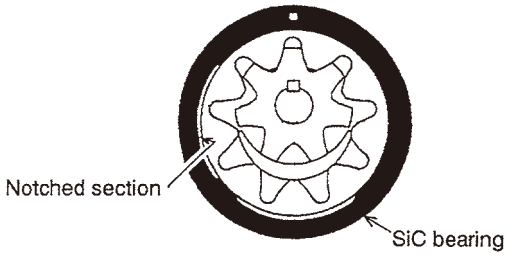

The front and rear sides of the carbon-made bearing are the same.

- Fastening Bolts

  Fasten the bolts in diagonal order by applying the fastening torque shown in the following table. Apply an equal torque to each bolt.

Model	Type	Fastening torque	Size of bolts
GM-15V	Hex. socket head bolt	2.9	M6×45L*
		5.2	M6×35L
GM-25V		9.8	M8×90L*
		3.0	M5×35L
		12.5	M8×40L

⚠ CAUTION

The *-marked bolts are used to fasten the cover. Fasten them by applying the same torque using a torque wrench. If the fastening torque shown in the table above is not employed, the performance may be affected. In such a case, the performance is not guaranteed.

- Drive magnet mounting to the motor shaft

  If you purchase only the pump unit from us and install your motor to it separately, see the instructions below.

[1] Drive magnet to the motor shaft.

GM-15V: Do not fully mount the drive magnet to the shaft. The shaft (top) end should not come out from the inner bottom surface of the drive magnet. Create a flat bottom in it. The GM-15V does not have the shaft key to determine the mounting direction of the drive magnet to the shaft. Do not use the key duct to fix the drive magnet onto it with the set screws.

GM-25V: Mount the drive magnet to the motor shaft until it bottoms out. A flat bottom will be created in the drive magnet. Use the shaft key to determine the mounting direction of the drive magnet.

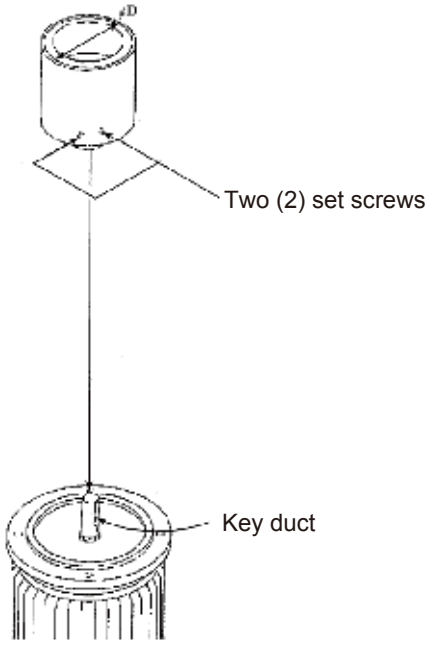

[2] Set screw

Apply the LockTite #271 to the screw thread and tighten them at the rated torque of:

GM-15V: 4.9N•m

GM-25V: 11.8N•m

[3] Bracket mounting to the motor

Keep the terminal box of the motor to the correct position when mounting the bracket to the motor. Or it can rotate. Use the specified bolt sizes and spring washers:

GM-15V: M8×25

GM-25V: M10×25

EC DECLARATION OF CONFORMITY

A copy of the original Declaration of Conformity

(SUPPLIER'S NAME)

WE

IWAKI CO.,LTD.

(ADDRESS)

6-6 2-CHOME KANDA-SUDACHO CHIYODA-KU TOKYO JAPAN

(PRODUCT)

DECLARE UNDER OUR SOLE RESPONSIBILITY THAT THE PRODUCTS

CHEMICAL GEAR PUMP

(MODEL NAME)

GM-V SERIES

TO WHICH THIS DECLARATION RELATES ARE IN CONFORMITY

WITH THE FOLLOWING STANDARDS OR DIRECTIVES AS FAR AS APPLICABLE

(DIRECTIVES)

MACHINERY DIRECTIVE 2006/42/EC (ANNEX IIA)
RoHS DIRECTIVE 2011/65/EU

(STANDARDS)

EN ISO12100: 2010 EN809: 1998 + A1: 2009 EN IEC63000: 2018

(A PERSON WHO IS AUTHORISED TO COMPILE THE TECHNICAL FILE IN THE COMMUNITY)

IWAKI EUROPE GMBH
SIEMENSRING 115 D-47877 WILLICH GERMANY

NOTE: THIS DECLARATION BECOMES INVALID IF TECHNICAL OR OPERATIONAL MODIFICATIONS ARE INTRODUCED WITHOUT THE MANUFACTURER'S CONSENT.

T. Sawada.

TSUTOMU SAWADA

DEPUTY SENIOR GENERAL MANAGER,

QUALITY ASSURANCE HEAD OFFICE

Tokyo, Sep. 13, 2021

(PLACE AND DATE OF ISSUE) **(NAME AND SIGNATURE OR EQUIVALENT MARKING OF AUTHORIZED PERSON)**

DOCUMENT NO. IS-51K-523-3

CE conformity

■ **Information on CE conformity of pump units when the motor is fitted by the customer (dealer/operator)**

We hereby confirm the CE conformity of our pump unit provided that the following criteria about intended use are satisfied as described in this instruction manual:

- Motor conformity in accordance with any relevant EC directives which are currently effective.
- The dimensions of a required motor flange and shaft must fit the specified pump.
- The motor must be installed to the pump according to this instruction manual.
- Guaranteed grounding
- The pump must not be repainted over our original upper coating.

Any reseller or dealer who connects the pump with a motor and markets it as a complete unit must conform to all relevant EC directives. In such cases, the reseller or dealer then becomes the manufacturer.

Waste Electrical and Electronic Equipment (WEEE)

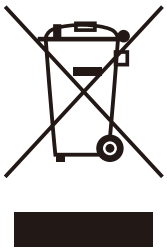

In accordance with the European Directive 2012/19/EU on waste electrical and electronic equipment, this product features the crossed-out wheelie bin symbol. When this product is disposed of in household wastes, toxic components included in it can cause major environmental and human health problems. Use appropriate waste collection systems for recovery and recycling. Contact your local distributor or nearest Iwaki company for the detailed collection systems.

https://www.iwakipumps.jp
IWAKI CO.,LTD. 6-6 Kanda-Sudacho 2-chome Chiyoda-ku Tokyo 101-8558 Japan
TEL: +81 3 3254 2935 FAX: +81 3 3252 8892

European Headquarter / IWAKI Europe GmbH
TEL: +49 2154 9254 0 FAX: +49 2154 9254 48
Germany / IWAKI Europe GmbH
TEL: +49 2154 9254 50 FAX: +49 2154 9254 55
The Netherlands / IWAKI Europe GmbH (Netherlands Branch)
TEL: +31 74 2420011 FAX: +49 2154 9254 48
Italy / IWAKI Europe GmbH (Italy Branch)
TEL: +39 0445 561219 FAX: +39 0445 569088
Spain / IWAKI Europe GmbH (Spain Branch)
TEL/FAX: +34 934 741 638
Poland / IWAKI Europe GmbH (East Europe Branch)
TEL: +48 12 347 0755 FAX: +48 12 347 0900
Denmark / IWAKI Nordic A/S
TEL: +45 48 242345
Finland / IWAKI Suomi Oy
TEL: +358 10 201 0490
Norway / IWAKI Norge AS
TEL: +47 23 38 49 00
Sweden / IWAKI Sverige AB
TEL: +46 8 511 72900
Belgium / IWAKI Belgium N.V.
TEL: +32 13 670200 FAX: +32 13 672030
France / IWAKI France S.A.
TEL: +33 1 69 63 33 70 FAX: +33 1 64 49 92 73
U.S.A. / IWAKI America Inc.
TEL: +1 508 429 1440 FAX: +1 508 429 1386
Brazil / IWAKI Do Brasil Comercio De Bombas Hidraulicas LTDA.
TEL/FAX: +55 19 3244 5900
China (Shanghai) / IWAKI Pumps (Shanghai) Co., Ltd.
TEL: +86 21 6272 7502 FAX: +86 21 6272 6929
China (Hong Kong) / IWAKI Pumps Co., Ltd.
TEL: +852 2607 1168 FAX: +852 2607 1000
China (Guangzhou) / GFTZ IWAKI Engineering & Trading Co., Ltd.
TEL: +86 20 84350603 FAX: +86 20 84359181
China (Shenzhen) / IWAKI Pumps (Shenzhen) Co., Ltd.
TEL: +86 0755 8656 3696
Singapore / IWAKI Singapore Pte Ltd.
TEL: +65 6316 2028 FAX: +65 6316 3221
Indonesia / IWAKI Singapore Pte Ltd. (Indonesia Office)
TEL: +62 21 6906606 FAX: +62 21 6906612
Malaysia / IWAKIm SDN. BHD.
TEL: +60 3 7803 8807 FAX: +60 3 7803 4800
Korea / IWAKI Korea Co., Ltd.
TEL: +82 2 6238 4800 FAX: +82 2 6238 4801
Taiwan / IWAKI Pumps Taiwan Co., Ltd.
TEL: +886 2 8227 6900 FAX: +886 2 8227 6818
Thailand / IWAKI (Thailand) Co., Ltd.
TEL: +66 2 322 2471 FAX: +66 2 322 2477
Australia / IWAKI Pumps Australia Pty Ltd.
TEL: +61 2 9899 2411 FAX: +61 2 9899 2421

T348-6 '26/09