# Hi-Techno Pump

## IX-B series

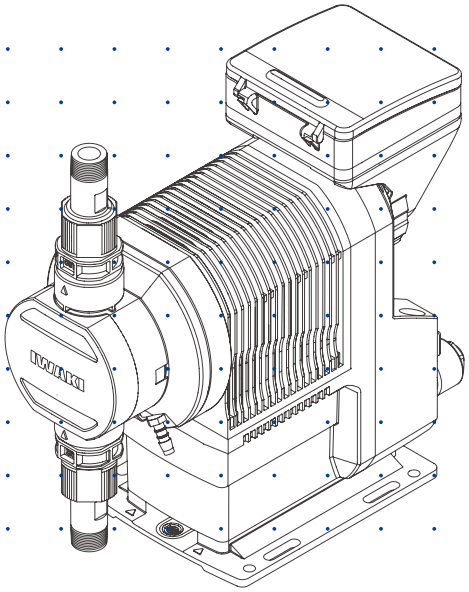

# Instruction manual

**Thank you for choosing our product.**

⚠ Please read through this instruction manual before use.

This instruction manual describes important precautions and instructions for the product. Always keep it on hand for quick reference.

©2017 IWAKI CO., LTD.

# Order confirmation

*Open the package and check that the product conforms to your order. If any problem or inconsistency is found, immediately contact your distributor.*

## *a. Check if the delivery is correct.*

*Check the nameplate to see if the information such as model codes, discharge capacity and discharge pressure are as ordered.*

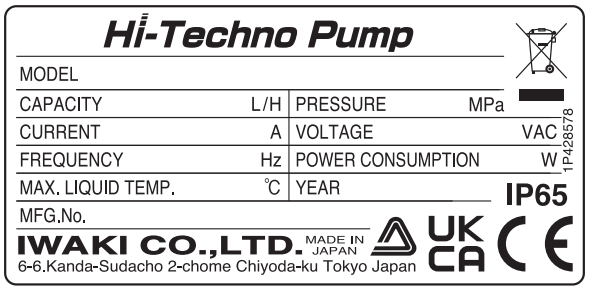


*The CE/UKCA markings on our product(s) are for us to market the product(s) into the European Union market / the Great Britain (England, Wales and Scotland) market, however, the CE/UKCA markings do not ensure any safety or conformity of the product(s) outside the EU/GB markets.
When the pump is incorporated into the equipment marketed in the EU/GB markets, such equipment must meet all the requirements of applicable directives/regulations. In such a case, any person who places the equipment on the markets must carry CE/UKCA marks on the equipment as a manufacturer.

## *b. Check accessories are complete.*

- A mounting adapter (pumps with TC/TE wet ends)

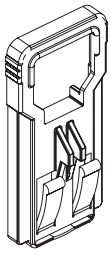

- Two ø10×ø12 hose adaptors (IX-B 030/045 TC/TE)

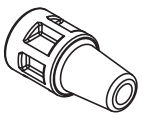

## *c. Check if the delivery is damaged or deformed.*

*Check for transit damage and loose bolts.*

# Contents

**Order confirmation** ..... **2**

## *Safety instructions* ..... *6*

**WARNING** ..... **7**
**CAUTION** ..... **8**
**Precautions for use** ..... **10**

## *Overview* ..... *12*

**Introduction** ..... **12**
Pump structure & Operating principle ..... 12
Features ..... 13
**Operational functions** ..... **14**
Manual mode ..... 14
EXT mode ..... 14
Analog proportional control ..... 14
Pulse control ..... 16
Batch control ..... 16
Interval batch control ..... 18
AUX function ..... 18
Priming function ..... 19
STOP functions ..... 19
STOP function ..... 19
Pre-STOP function ..... 20
Protective functions ..... 20
Interlock function ..... 20
Diaphragm rupture detection ..... 20
Pressure overload/Failed rotation control detection ..... 21
Output functions ..... 22
Alarm output function ..... 22
Analog output function ..... 23
Other functions ..... 23
Suction speed setting ..... 23
Maximum flow rate setting ..... 23
Diaphragm position adjustment ..... 23
Anti chattering setting ..... 23
Output logic setting ..... 24
Flow unit setting ..... 24
Language setting ..... 24
Keypad lock ..... 24
Factory default setting ..... 24
**Part names** ..... **25**
Pump ..... 25
Operation panel ..... 26
Basic displays & Pump states ..... 27

**Identification codes** ..... **28**
Pump ..... 28

## *Installation* ..... *29*

**Pump mounting** ..... **29**
Floor mounting ..... 29
Wall mounting ..... 30
Mounting ..... 30
Demounting ..... 31
**Console positioning** ..... **32**
Control unit ..... 32
Rear case ..... 32
**Plumbing** ..... **33**
Piping layout ..... 33
Tube connection ..... 33
**Drain port (vent hole)** ..... **34**
**Wiring** ..... **35**
End terminals ..... 35
Power voltage/Earthing ..... 36
Signal wire connection ..... 37
EXT IN ..... 38
STOP IN ..... 38
AUX IN/Analog OUT ..... 39
Alarm OUT (DIN connector) ..... 40

## *Operation* ..... *41*

**Before operation** ..... **41**
Points to be checked ..... 41
Retightening of pump head fixing bolts ..... 41
Commissioning ..... 42
Before a long period of stoppage (One month or more) ..... 42
**Perform a calibration** ..... **43**
Calibration process ..... 44
**Operation setting** ..... **46**
Setting flow chart ..... 47
Menu screen ..... 48
EXT mode selection ..... 49
Calibration ..... 52
Signal input setting ..... 52
Analogue output setting ..... 54
Alarm output setting (OUT 1) <Mechanical relay> ..... 55
Alarm output setting (OUT 2) <PhotoMOS relay> ..... 57
Data logging ..... 58
Setting of other functions ..... 59
**Operation** ..... **63**
Manual operation ..... 63

EXT operation ..... 64
AUX function ..... 64
Priming function ..... 65
Keypad lock ..... 65
Keypad lock activation ..... 65
Keypad lock release ..... 66
Emergency stop ..... 66

***Maintenance ..... 67***

**Troubleshooting ..... 68**
Pump ..... 68
**Error messages ..... 69**
**Inspection ..... 69**
Daily inspection ..... 69
Periodic inspection ..... 69
**Wear part replacement ..... 70**
Wear part list ..... 70
Before replacement ..... 72
Valve set replacement ..... 72
Diaphragm set replacement ..... 73
**Exploded view ..... 77**
Pump head, Drive unit & Control unit ..... 77
Pump head ..... 78
IX-B007/-B015/-B030/-B045 TC/TE R/N ..... 78
IX-B007/-B015/-B030/-B045 TC/TE G ..... 79
IX-B007/-B015/-B030/-B045 TC/TE F ..... 80
IX-B007/-B015/-B030/-B045 TC/TE T ..... 81
IX-B007/-B015/-B030/-B045 S6 R/N ..... 82
IX-B007/-B015/-B030/-B045 S6 FJ/FD/FA ..... 83
**Specifications/Outer dimensions ..... 84**
Specifications ..... 84
Pump ..... 84
Control unit ..... 85
Power cable ..... 86
Body colour ..... 86
Outer dimensions ..... 87
IX-B007/-B015/-B030/-B045 TC/TE R/N ..... 87
IX-B007/-B015/-B030/-B045 TC/TE G ..... 88
IX-B007/-B015/-B030/-B045 TC/TE F ..... 89
IX-B007/-B015/-B030/-B045 TC/TE T ..... 90
IX-B007/-B015/-B030/-B045 S6 R/N ..... 91
IX-B007/-B015/-B030/-B045 S6 FJ/FD/FA ..... 92
Anchorage points guide (Wall-mount use of the base) ..... 93
EC DECLARATION OF CONFORMITY ..... 94
UK DECLARATION OF CONFORMITY ..... 95

# Safety instructions

***Read through this section before use. This section describes important information for you to prevent personal injury or property damage.***

## ■ Symbols

In this instruction manual, the degree of risk caused by incorrect use is noted with the following symbols. Please pay attention to the information associated with the symbols.

| | |
|---|---|
| ⚠ **WARNING** | **Indicates mishandling could lead to a fatal or serious accident.** |

| | |
|---|---|
| ⚠ **CAUTION** | **Indicates mishandling could lead to personal injury or property damage.** |

A symbol accompanies each precaution, suggesting the use of “Caution”, “Prohibited actions” and specific “Requirement”.

**Caution marks**



Caution　Electrical shock

**Prohibition mark**



Prohibition　Do not remodel

**Requirement mark**



Requirement　Wear protectors　Earthing

## ⚠ Export Restrictions

Technical information contained in this instruction manual might be treated as controlled technology in your countries, due to agreements in international regime for export control.
Please be reminded that export license/permission could be required when this manual is provided, due to export control regulations of your country.

# ⚠WARNING


Electrical shock

**Turn off power before service**

Risk of electrical shock. Be sure to turn off power to stop the pump and related devices before service is performed.


Requirement

**Stop operation**

If you notice any abnormal or dangerous conditions, suspend operation immediately and inspect/solve problems.


Prohibition

**Do not use the pump in any condition other than its intended purpose**

The use of the pump in any conditions other than those clearly specified may result in failure or injury. Use this product in specified conditions only.


Do not remodel

**Do not modify the pump**

Alterations to the pump carry a high degree of risk. It is not the manufacturer's responsibility for any failure or injury resulting from alterations to the pump.


Wear protectors

**Wear protective clothing**

Always wear protective clothing such as an eye protection, chemical resistant gloves, a mask and a face shield during disassembly, assembly or maintenance work. The specific solution will dictate the degree of protection. Refer to SDS precautions from the solution supplier.


Prohibition

**Do not damage the power cable**

Do not pull, knot, or crush the power cable. Damage to the power cable could lead to a fire or electrical shock if cut or broken.


Prohibition

**Do not operate the pump in a flammable atmosphere**

Do not place explosive or flammable material near the pump.

# ⚠CAUTION


Requirement

**Qualified personnel only**

The pump should be handled or operated by qualified personnel with a full understanding of the pump. Any person not familiar with the product should not take part in the operation or maintenance of the pump.


Prohibition

**Use specified power only**

Do not apply power other than that specified on the nameplate. Otherwise, failure or fire may result. Ensure the pump is properly grounded.


Prohibition

**Keep electric parts and wiring dry**

Risk of fire or electric shock. Install the pump where it can be kept dry.


Caution

**Ventilation**

Fumes or vapours can be hazardous with certain solutions. Ensure proper ventilation at the operation site.


Prohibition

**Do not install/store the pump:**

- In a flammable/corrosive atmosphere.
- In a dusty/humid environment.
- Where ambient temperature can exceed 0-50°C (32-122°F).
- In direct sunlight or wind & rain.


Requirement

**Spill precautions**

Ensure protection and containment of solution in the event of plumbing or pump damage (secondary containment).


Prohibition

**Do not use the pump in a wet location**

The pump is not waterproof. Use of the pump in wet or extremely humid locations could lead to electric shock or short circuit.


Earthing

### Grounding

Risk of electric shock! Always properly ground the pump. Conform to local electric codes.


Electrical shock

### Install a GFCI (earth leakage breaker)

An electrical failure of the pump may adversely affect other devices on the same line. Purchase and install a GFCI (earth leakage breaker) separately.


Requirement

### Preventative maintenance

Follow instructions in this manual for replacement of wear parts. Do not disassemble the pump beyond the extent of the instructions.


Prohibition

### Do not use a damaged pump

Use of a damaged pump could lead to an electric shock or death.


Requirement

### Disposal of a used pump

Dispose of any used or damaged pump in accordance with local rules and regulations. If necessary, consult a licensed industrial waste disposal company.


Caution

### Check pump head bolts

Liquid may leak if any of the pump head bolts become loose. Remove the bolt cover and tighten the bolts diagonally and evenly by the following torque before initial operation and at regular intervals.

**Tightening torque**

| Torque | Bolts | Number of bolts |
|---|---|---|
| 3 N•m | M5 hexagon head bolt | 4 |

# Precautions for use

- Electrical work should be performed by a qualified electrician. Otherwise, personal injury or property damage may result.

Caution

- Do not install the pump:
  – In a flammable atmosphere.
  – In a dusty/humid place.
  – In direct sunlight or wind & rain.
  – Where ambient temperature can exceed 0-50°C (32-122°F).

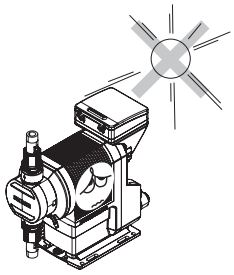

- Select a level location, free from vibration, that won't hold liquid. Anchor the pump with four M6 bolts so it doesn't vibrate. If the pump is not installed level, output may be affected.
  If necessary, select a rigid vertical wall on which the pump is mounted and use the attached mounting adapter and anchor bolts/nut.

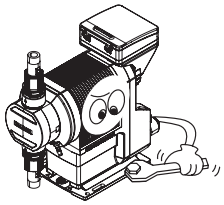

- When two or more pumps are installed together, vibration may be significant, resulting in poor performance or failure. Select a solid foundation (concrete) and fasten anchor bolts securely to prevent vibration during operation.

Caution

- Allow sufficient space around the pump for easy access and maintenance.

Requirement

- Install the pump as close to the supply tank as possible.

Requirement

- When handling liquids that generate gas bubbles (sodium hypochlorite or hydrazine solution), install the pump in a cool and dark place. Flooded suction installation is strongly recommended.

Caution

- The suction line I.D. should be equal to or wider than the I.D. of the pump.

Requirement

- Build up a flooded suction system for the viscous liquid delivery of 50mPa•S or more.

Requirement

- Use measures to keep the pump connections free from stress. Weight and thermal expansion/contraction of the piping can stress connection points.




- Overload protection will stop pump operation when discharge pressures reach 1.2 to 1.5 times higher than the pump maximum. If the discharge line cannot conservatively handle the maximum pressure, use a relief valve to safely depressurize the discharge line.




- Use care handling the pump. Do not drop. An impact may affect pump performance. Do not use a pump that has been damaged to avoid the risk of electrical damage or shock.

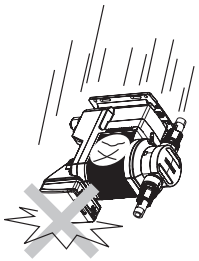

- The pump has a rating of IP65, but is not waterproof. Do not operate the pump while wet with solution or water. Failure or injury may result. Immediately dry off the pump if it gets wet.




- Do not close discharge line during operation. Solution may leak or pump and piping may break. Install a relief valve to ensure safety and prevent damaged plumbing.




- Solution in the discharge line may be under pressure. Release the pressure from the discharge line before disconnecting plumbing or disassembly of the pump to avoid solution spray.




- Wear protective clothing when handling or working with pumps. Consult solution SDS for appropriate precautions. Do not come into contact with residual solution.




- Do not clean the pump or nameplate with a solvent such as benzine or thinner. This may discolour the pump or erase printing. Use a dry or damp cloth or a neutral detergent.




- In accordance with the European Directive 2012/19/EU on waste electrical and electronic equipment (WEEE), this product features the crossed-out wheelie bin symbol. When this product is disposed of in household wastes, toxic components included in it can cause major environmental and human health problems. Use appropriate waste collection systems for recovery and recycling. Contact your local distributor or nearest Iwaki company for the detailed collection systems.



# Overview

***Pump characteristics, features and part names are described in this section.***

## Introduction

### *Pump structure & Operating principle*

*The IX series are diaphragm pumps with a brushless DC (BLDC) motor and feature a high turndown ratio & automatic controls.*

**Principle of operation**

In the IX series design, a BLDC motor rotation controls the flow rate.

Motor rotation is transmitted to an eccentric cam through a reduction gear and then converted to reciprocating motion. Volumetric change occurs in the pump chamber as the diaphragm moves back and forth and liquid is pumped because of the suction and discharge check valves. Discharge speed changes the flow rate while the suction speed remains the same at any flow rate.

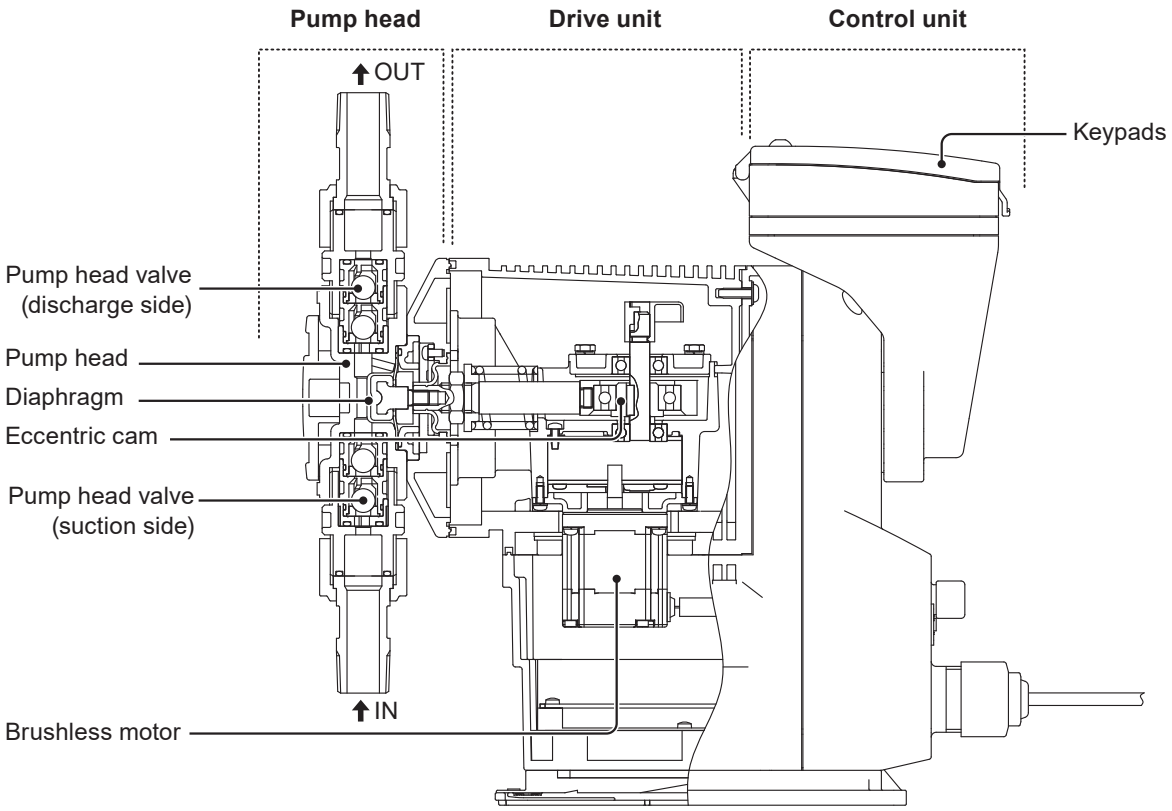

## *Features*

- **High turndown ratio**
  Use of a BLDC control motor enables accurate control with a wide turndown ratio.

- **High repeatability**
  Highly-efficient valve design and accurate discharge-/suction-speed controls assure the high repeatability of chemical dosing (±1%).

- **Energy-saving design**
  Use of helical gears and an assist spring reduces power consumption.

- **Automatic control**
  The IX can automatically run along with analog-, pulse-, batch- or interval batch-operation setting.

- **Multivoltage operation**
  The IX series can be used in all countries thanks to the universal power voltage (100-240VAC).

- **Safety design**
  A diaphragm rupture detection ensures user safety and a pressure overload detection protects the pump and pipework from an accidental discharge line pressure rise.

- **Ingress protection rating of IP65**

- **User-friendly design**
  The rear case itself as well as the operation panel can be turned around to the best position.

- **Wall-mount/Floor-mount options**
  The detached pump base is the wall-mounting bracket to hold the pump onto the wall.

- **Fool-proof design (valve set)**
  The fool-proof design prevents the valve set installed upside down which upsets the pump operation.

- **Adhesive-free diaphragm**
  The adhesive free “full-PTFE” diaphragm and so improved immunity to chemical attack.

- **LED bar**
  The large LED bar on the control unit assists in knowing various operating status and alarm conditions.

# Operational functions

## *Manual mode*

*Run/stop the pump by key operation. The flow rate can be changed with the up and the down keys at any time during operation or stop. The green LED bar lights during operation. See page 63 for detail.*

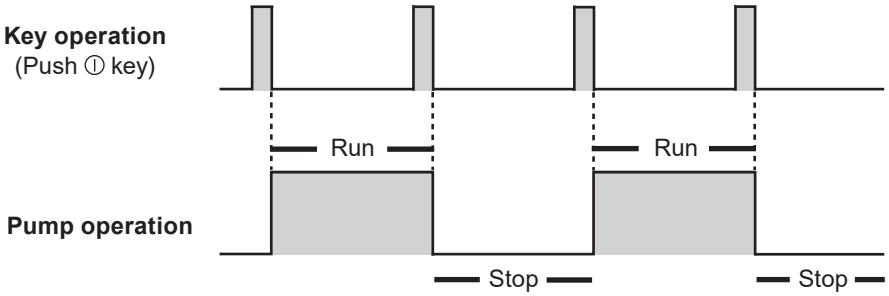


## *EXT mode*

### ■ Analog proportional control

**ANA. P (analog preset) setting (see pages 49 & 64)**

Select a proportional control pattern. 4 - 20mA, 20 - 4mA, 0 - 20mA and 20 - 0mA are available. During operation, the display shows the current flow rate. To show the current value, push the → key. To return to the flow rate display, push the ← key.

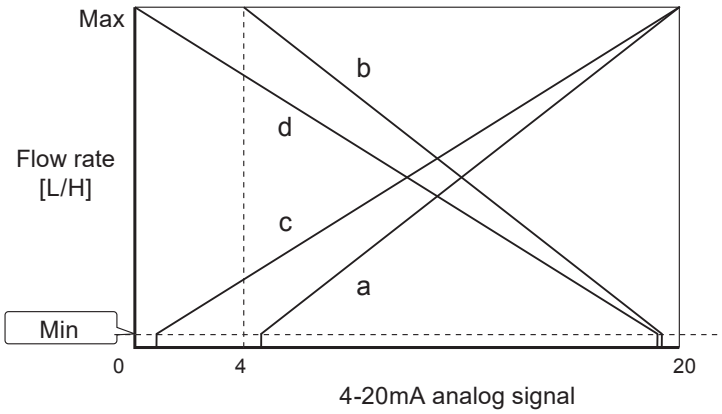


The left graph shows the flow rate at each pattern.

a. 4 - 20mA
b. 20 - 4mA
c. 0 - 20mA
d. 20 - 0mA

*The flow rate falls to 0mL/H if the pump runs beneath the minimum rate.

*The pump does not run over the maximum flow rate at any current value.

Example of use: pH control in a water treatment system

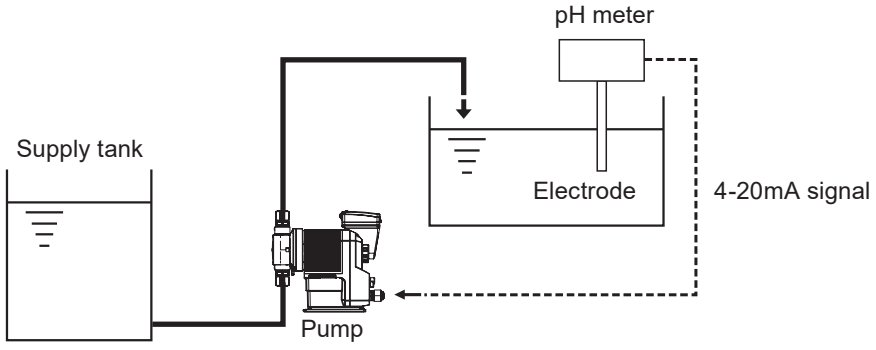

### ANA. V (analog variable) setting (see pages 49 & 64)

The pump increases/decreases a stroke/flow rate in proportion to 0-20mA. Determine the operational behaviour by setting two set points and choosing one of the LINEAR, BOX and LIMIT patterns.
To show the current value, push the → key. To return to the flow rate display, push the ← key.

<LINEAR>

A stroke/flow rate changes with a current value by a set line.

Condition:
Set Point 1 (SP.1) = Ampere: 6mA, Flow rate: 4.5L/H
Set Point 2 (SP.2) = Ampere: 17mA, Flow rate: 12.7L/H

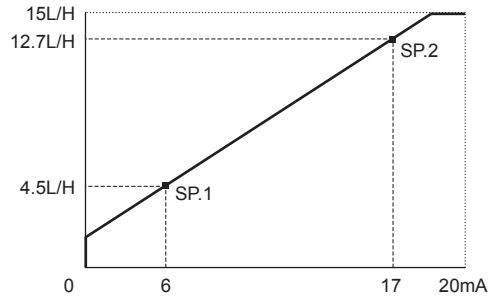


<BOX>

A stroke/flow rate changes with a current value by a set line. The rate does not exceed the Set Point 2 but then falls to 0 before the Set Point 1.

Condition:
Set Point 1 (SP.1) = Ampere: 6mA, Flow rate: 4.5L/H
Set Point 2 (SP.2) = Ampere: 17mA, Flow rate: 12.7L/H

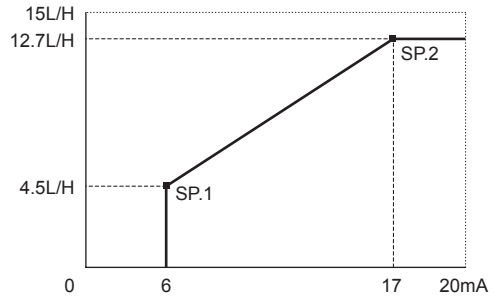


<LIMIT>

A stroke/flow rate changes with a current value by a set line. The rate does not falls below the Set Point 1 or exceed the Set Point 2.

Condition:
Set Point 1 (SP.1) = Ampere: 6mA, Flow rate: 4.5L/H
Set Point 2 (SP.2) = Ampere: 17mA, Flow rate: 12.7L/H

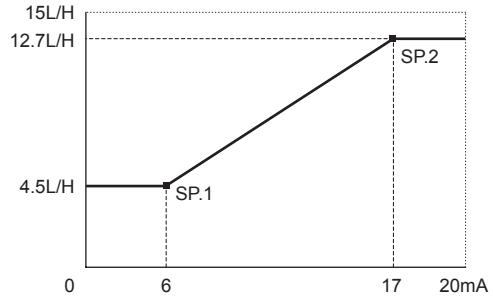

## ■ Pulse control

(See pages 49 & 64)

The flow rate is automatically controlled by the flow volume (mL) per pulse and the pulse signal frequency from a flow meter.

*It takes about 10 seconds for the IX to catch up with the change of the frequency. In other words, the pump stops 10 seconds after the pulse signal is stopped. Use the external interlock (or stop) signal to turn off the pump with no delay.

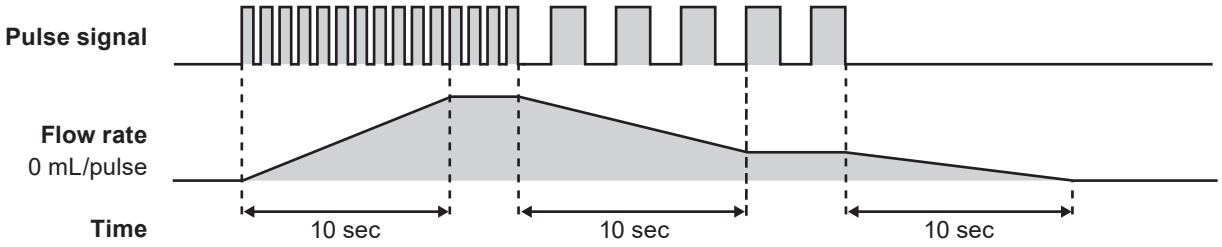


Example of use: Chemical dosing in a sewage treatment system

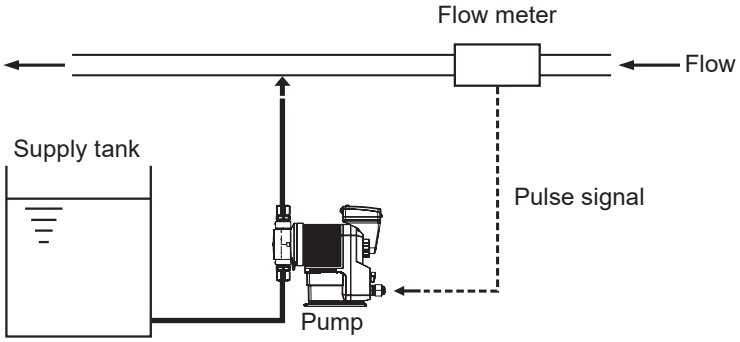


## ■ Batch control

(See pages 49 & 64)

The IX discharges a preset flow volume per pulse and stops when it is completed. The preset or remaining flow volume is shown on the controller until it has reduced to zero. In this control mode, the pump runs at the MAN speed (the pump speed in the manual mode). The pump behaviour can change depending on the setting of the buffer. See below.

**When the buffer is OFF:**

Any input of the external pulse signal will be cancelled when the pump is activated for the earlier pulse input. The next dosing becomes ready after the preset flow volume has been completed.

*Note the control stops immediately when the ↵ key is pushed once.

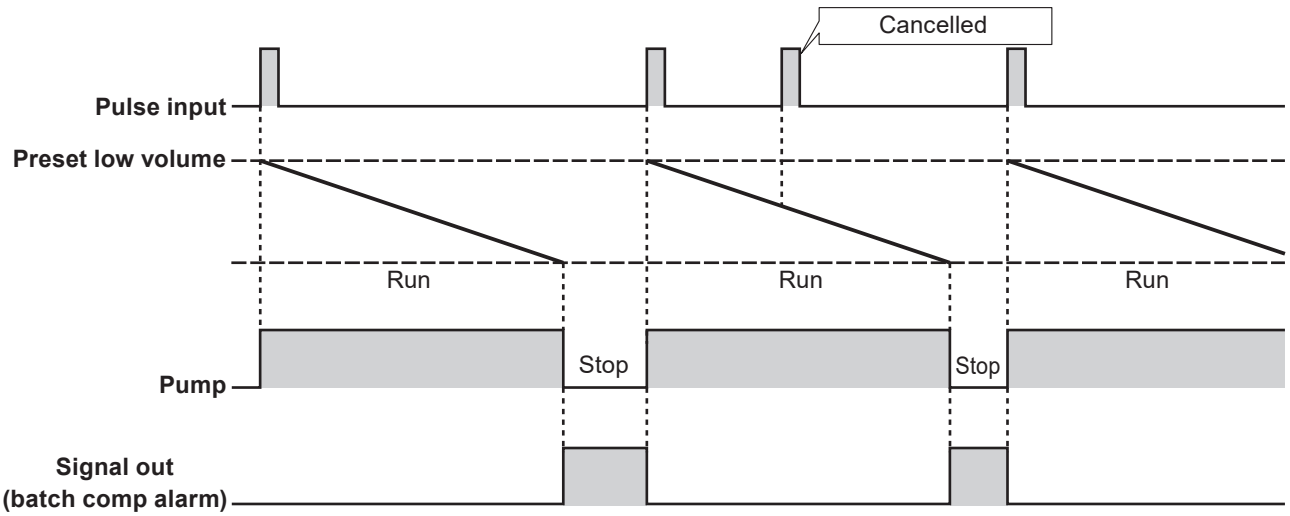

**When the buffer is ON:**

Every time the external pulse signal is input, the preset flow volume per pulse is accumulated (max 65535 pulses) even when the pump is activated for the earlier pulse input.

*The control stops immediately and all the pulse accumulation is cleared when the ↵ key is pushed once.

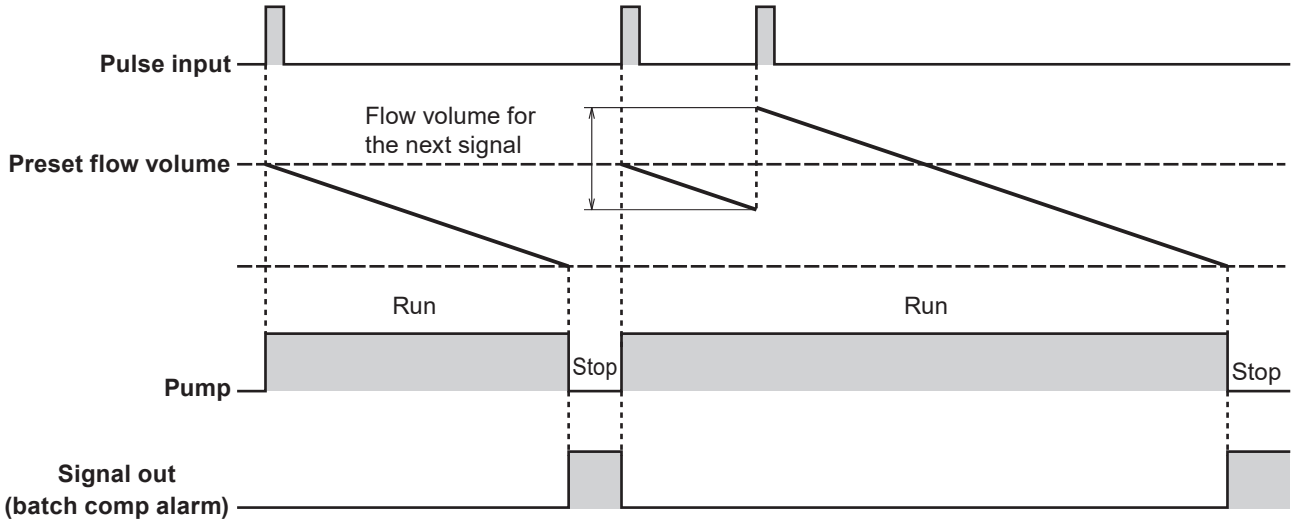


**Pulse input with the ↵ key:**

Instead of the pulse signal input, pushing the ↵ key can start or stop the batch control. In this case, the pump behaves as the control with the buffer OFF even when the buffer is set to ON in the batch control mode.

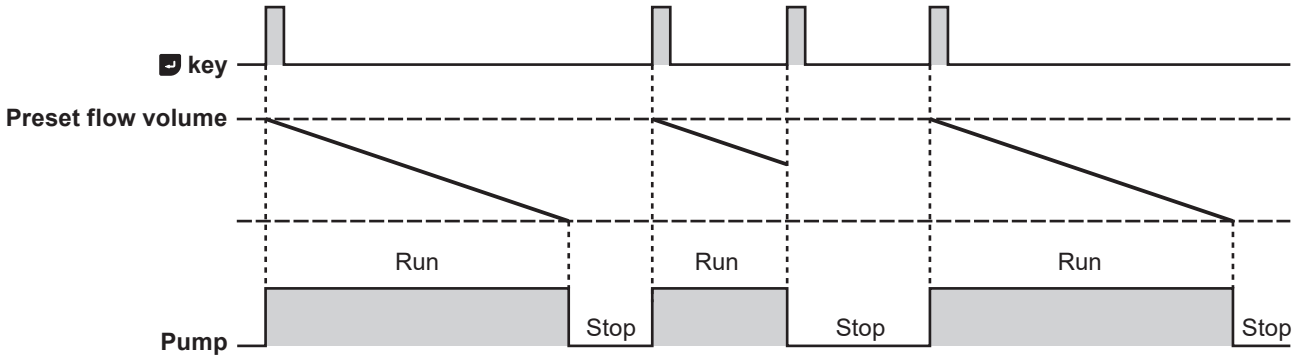


Example of use: Chemical dosing in a production line system

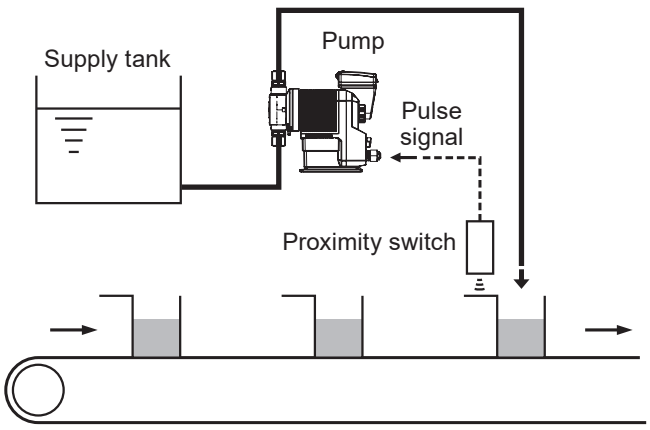

## ■ Interval batch control

(See pages 49 & 64)

To make an interval batch control, set a date and time interval and the flow volume. The IX discharges the pre-set flow volume at a set interval. In the diagram below, the interval is set to 1 hour.

*The pump runs at the MAN speed. The control is triggered by either the external pulse signal or the push of the ↵ key. Push the ⏻ key to stop the control when it is triggered by the ↵ key.

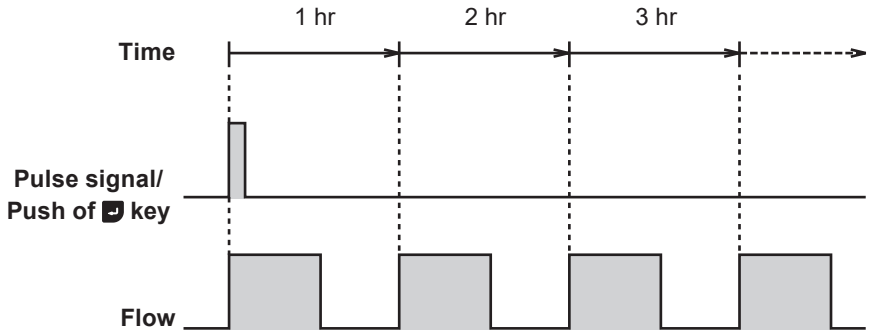


Example of use: Water transfer for a sprinkler system

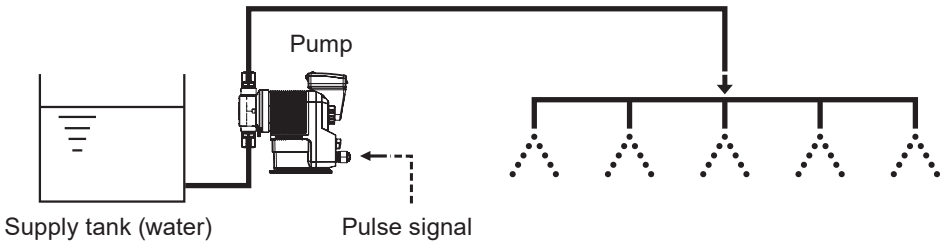


# *AUX function*

*The pump runs at the AUX speed while receiving the external signal via the AUX terminal. See page 64.*

*This function works only when the pump is running in either MAN or EXT mode (see page 47). The pump returns to the MAN or EXT mode once the AUX signal stops.

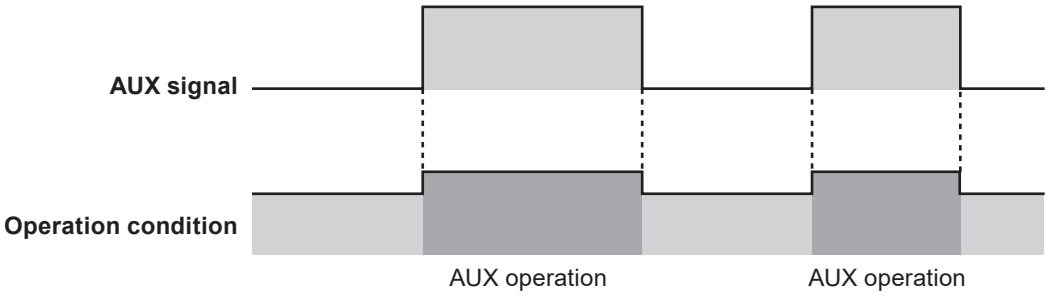

## *Priming function*

*The pump runs at the preset maximum flow rate (or the maximum stroke rate with the factory default setting) while both the UP and DOWN keys are pressed. Use this function for priming or degassing. The pump returns to normal flow rate after both the keys are released. See page 65 for detail.*

*This function is available at any time when the pump is in a wait mode or in an operation mode (see page 47).

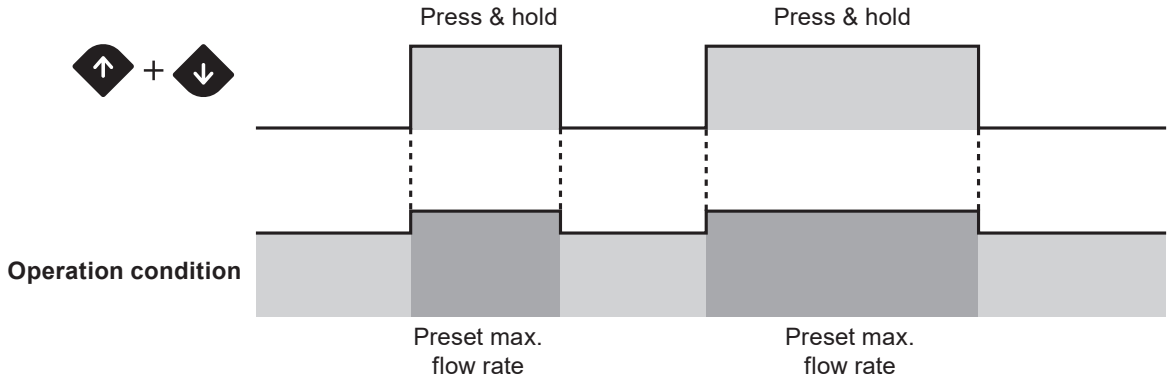


## *STOP functions*

### ■ STOP function

(See page 52)

The start/stop of operation can be controlled with the signal from a level sensor. The LED bar changes from orange to purple colour when the pump is receiving the STOP signal from a level sensor in operation.
See the “STOP IN” paragraph on page 38 for wiring diagram.

Example of use: Liquid level monitoring

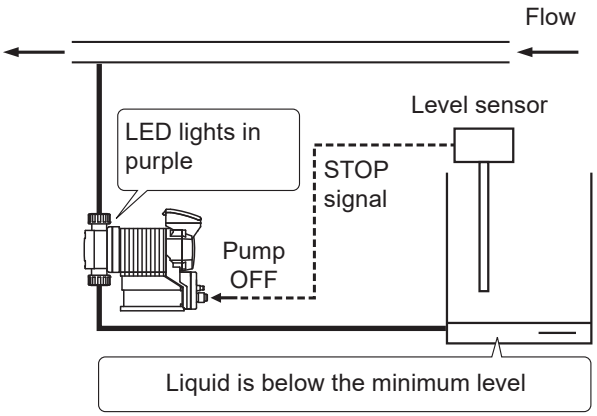


The pump stops when liquid has fallen below the minimum level.

### ■ Pre-STOP function

(See page 52)

The liquid level in the supply tank can be monitored with the signal from a level sensor. The LED bar changes from green to orange colour when the pump is receiving the Pre-STOP signal from a level sensor in operation. See the “STOP IN” paragraph on page 38 for wiring diagram.

Example of use: Liquid level monitoring

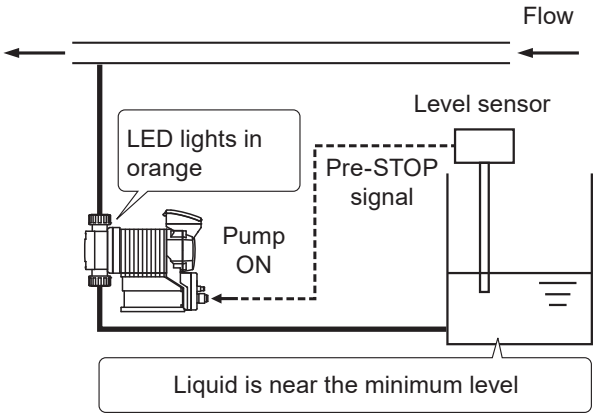


The orange LED bar lights to inform a user that liquid comes close to the minimum level in a supply tank.

## *Protective functions*

### ■ Interlock function

(See pages 38 & 52)

The interlock function works in the same way as the STOP function. Use this function for an emergency stop.

### ■ Diaphragm rupture detection

(See page 52)

The pump stops right after a built-in sensor detects a leak in the compartment at the back of the diaphragm. In this condition, the red LED bar will flash. Replace a broken diaphragm as necessary. See page 73 for diaphragm replacement. To release this error condition, push the start/stop key.

NOTE

- This capacitance sensor does not work properly if liquid conductivity is 1mS/m or below. Before sending pure water, oil or any other low-conductivity liquid, check the conductivity to see if it meets the minimum detection level. If it is not satisfied, the leak sensor is no longer usable. In this case a leak from the drain port is the only valid indicator. In either case, replace the diaphragm immediately when a leak is found.
- When the liquid temperature is much lower than the room temperature where the pump is installed, condensed water can build up in the compartment at the back of the diaphragm and the built-in leak sensor there can stop the pump even when no leak has occurred. Reduce the temperature difference between the liquid temperature and the room temperature or disable the “Leak Detection” option to remove this issue.

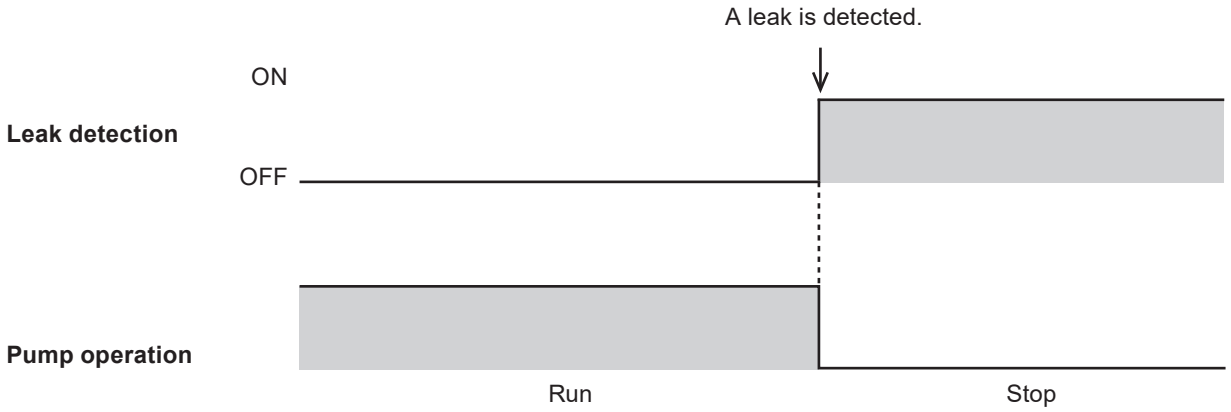




## ■ Pressure overload/Failed rotation control detection

The pump stops and the red LED bar flashes when a controller circuit board detects 1.2-1.5 times higher discharge pressure than the maximum level or when the hole IC which monitors the motor rotation has failed. If the pump is suspended (by the over-current protection) in either condition, the pump resumes operation 30 seconds later. If the suspended operation has recurred 5 times consecutively, the pump will not resume operation any more and will keep still. These error conditions can be released when the start/stop key is pushed once.

NOTE

The discharge pressure can rise 1.2-1.5 times higher than the maximum allowable level of the pump depending on operating conditions and piping layouts. If the pressure rises too sharp (with the closed discharge), it may not be even detected or curbed by the over-current protection. Set up a relief valve to protect the related devices on the discharge line from the possible pressure rise if necessary.

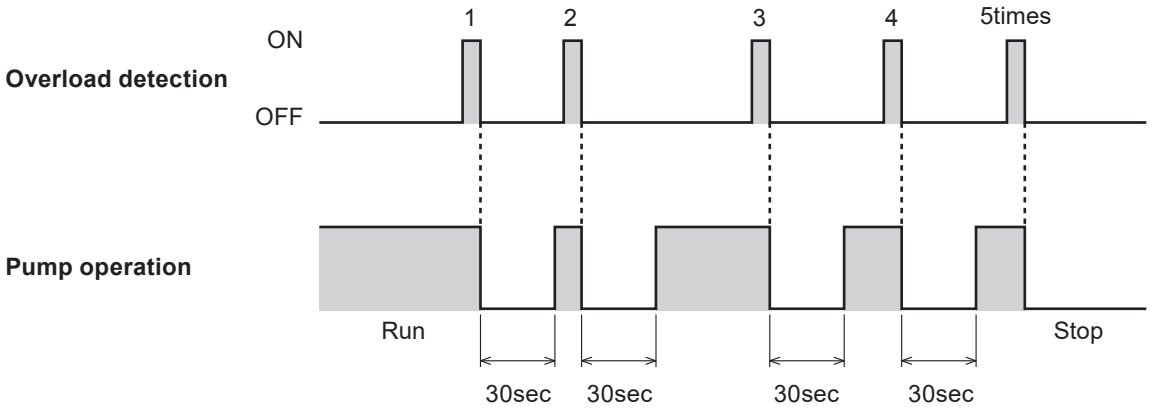

## ■ Alarm output function

(See page 55)

Enable or disable the output of the batch completion, STOP, Pre-STOP, interlock, diaphragm rupture detection, pressure overload detection, and/or drive error detection functions which is preset to the Alarm OUT 1 and 2, or the output of the volume proportional pulse which is preset only to the Alarm OUT 2. See the "Alarm OUT (DIN connector)" paragraph on page 40 for wiring diagram.

Alarm OUT 1 (OUT 1) : Mechanical relay output (no voltage contact 1a×1 250VAC 3A, resistive load)
Alarm OUT 2 (OUT 2) : PhotoMOS relay output (no voltage contact 1a×1 24VAC/DC 0.1A, resistive load)

*If the batch completion output is enabled to the Alarm OUT 1 or 2 (or if the volume proportional pulse output enabled only to the Alarm OUT 2), the other outputs (STOP, Pre-STOP, interlock, diaphragm rupture detection, pressure overload detection, and drive error detection) turn disabled in that Alarm OUT.

*The other outputs (STOP, Pre-STOP, interlock, diaphragm rupture detection, pressure overload detection, and drive error detection) can be enabled together (to the Alarm OUT 1 or 2), sharing the same output signal. See the controller display to tell which the signal it is.

*With the factory default setting, the range of the volume proportional pulse output is between 1Hz (at the min flow of the pump) and 200Hz (at the max flow rate of the pump). The max flow rate is manually reduced as shown below through the “Pump Max Rate” options in the “Other Features” menu.

**IX-B007: Volume proportional pulse output behaviour**

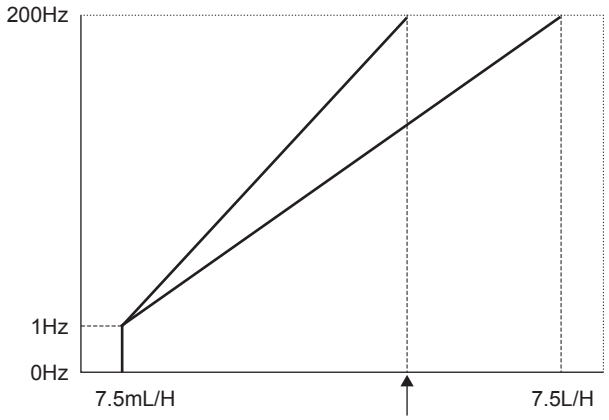

### ■ Analog output function

(See page 54)

The pump transmits the 0-20mA analog signal in proportion to the preset flow rates (set point 1 and 2).

*If the actual flow has fallen below the minimum flow at each model (see page 84), the amperage goes down to the 0L/H level.

*The amperage does not fall below 0mA or exceed 20mA at any setting of the set point 1 and 2.

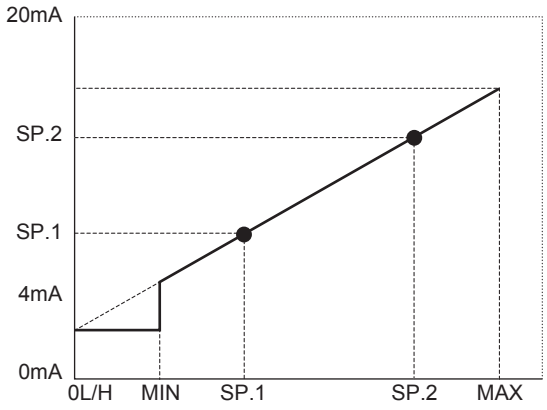




## *Other functions*

### ■ Suction speed setting

(See page 59)

Suction speed is adjustable by 4 levels depending on liquid property. Reduce suction speed so as to reduce inertia resistance for the delivery of viscous liquid or to prevent cavitation for gaseous liquid. Select 100% (default), 75%, 50% or 25%.

*The max flow rate of the pump (determined through the “Pump MAX Rate” or “Pump AUX Rate” options) goes down to an appropriate level automatically when the suction speed is reduced from 100% to 75%, 50%, or 25%. Recover the max flow rate manually if the suction speed is returned (/increased).

### ■ Maximum flow rate setting

(See page 59)

The maximum allowable flow rate of the IX can be reduced if necessary. The factory default setting of the IX-B007: 7.5L/H, IX-B015: 15L/H, IX-B030: 30L/H, and IX-B045: 45L/H.

### ■ Diaphragm position adjustment

(See page 59)

A pump shaft expands or contracts for easy diaphragm replacement. Select the “MAX OUT Pos.” option through the “Other Features” menu in order to extend the pump shaft to the maximum. Select the “MAX IN Pos.” option to contract it to the minimum and mount the pump head. See the “Diaphragm set replacement” section on page 73 for detail.

### ■ Anti chattering setting

(See page 59)

Set a pulse recognition time for the IX not to be adversely affected by chattering or noise. The factory default setting is 5 msec. This means the pump recognizes the pulse length of 5 msec or more. The other options are 1 and 2 msec and should be selected for the shorter pulse length, however, note the shorter the recognition time is, the more susceptible to the interference of noise the pump becomes. Note the maximum allowable input frequency of the IX is 100Hz.

## ■ Output logic setting

(See page 59)

Select “normally open” or “normally closed” for the Alarm OUT 1 (OUT 1) and 2 (OUT 2) outputs.

## ■ Flow unit setting

(See page 59)

Select L/H or GPH for the flow rate indication.

## ■ Language setting

(See page 59)

Select your language through the language selection.

## ■ Keypad lock

(See page 65)

The IX-C is shipped with the access codes at default values (00000). In order to prevent against unauthorized tampering, you will need to change the access codes to your own values.

## ■ Factory default setting

Power on the pump while pressing the ESC key to recall the factory default setting. Note the flow volume per shot obtained through the calibration process (see page 44) remains the same.

# Part names

## *Pump*

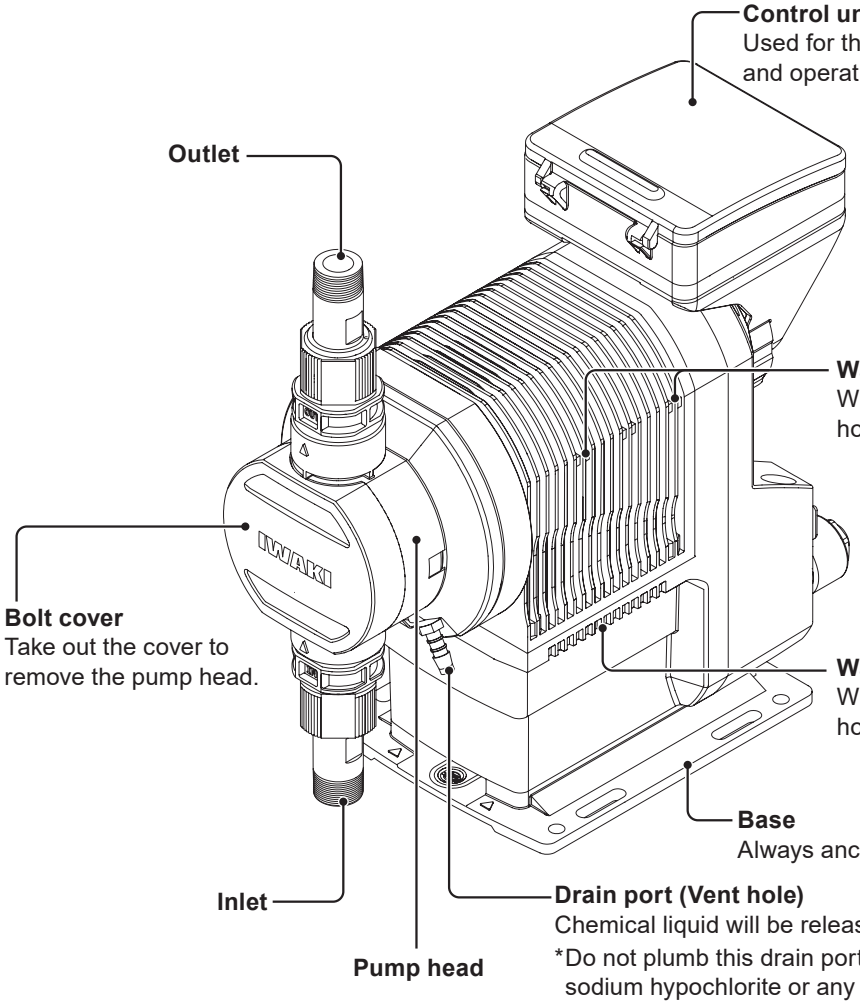


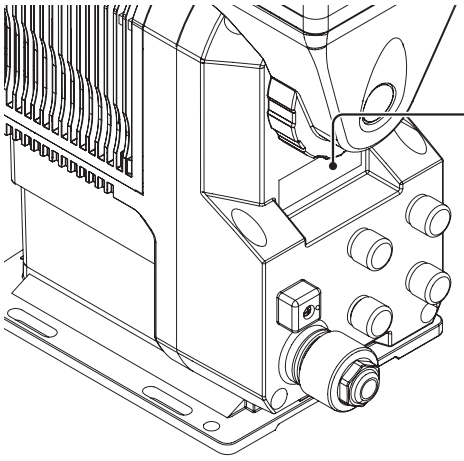

## *Operation panel*

**Display**
An operational status, a selected mode and set values are shown here.

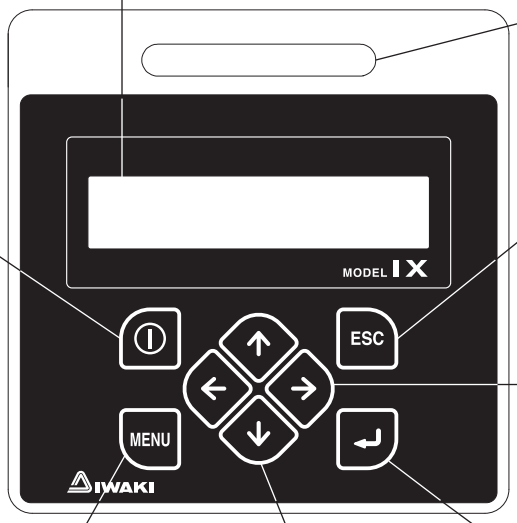


**LED bar**
The LED bar on the control unit will indicate various operating status and alarm conditions.

**Start/Stop key**
Used for starting/stopping the pump or moving back to the MAN/EXT selection in setting.

**ESC key**
Used for cancelling the current setting and moving back to a previous menu screen.

**Left/Right key**
Used for moving through items. Press and hold both keys for 3 seconds to disable keypads.

**Enter key**
Used for making a decision in the menu screen or MAN/EXT selection.

**MENU key**
Used in the MAN/EXT selection screen for calling up the menu screen.

**UP/DOWN key**
Used for changing numeric values or selecting an option.
The pump enter the priming mode while both the keys are pressed.

## ■ Basic displays & Pump states

| | Display | Red LED bar | Green LED bar | Orange LED bar | White/Purple LED bar |
|---|---|---|---|---|---|
| Operation | Pump On (Manual)<br>45.0 L/H | — | Flows in MAN mode operation. | — | — |
| | Pump On (ANA.P)<br>45.0 L/H | — | Lights (waits) or Flows (runs) in EXT mode (Analog control). | — | — |
| | AUX IN OVERRIDE!<br>45.0 L/H | — | Flows (runs) in AUX operation. | — | — |
| | PRIMING OVERRIDE<br>45.0 L/H | — | Flows in priming mode. | — | — |
| | Pre-Stop (MAN)<br>45.0 L/H | — | — | Lights (waits) or Flows (runs) when Pre-STOP function is active. | — |
| Stop | Standby (Manual)<br>45.0 L/H | — | — | — | A white lights (pump waits) in the MAN mode. |
| | Standby (EXT)<br>Analog Preset | — | — | — | A white lights (pump waits) in the EXT mode. |
| | SELECT OPERATION<br>MAN← →EXT(ANA.P) | — | — | — | A white lights (pump waits) in the MAN/EXT selection. |
| | MAIN MENU:<br>← Program EXT → | — | — | — | A white lights (pump waits) in a main menu screen. |
| | MOTOR OVERLOAD!<br>S/S Key = Clear | Blinks when the pressure over-load protection is active. | — | — | — |
| | LEAK DETECTED!<br>S/S Key = Clear | Blinks when the diaphragm is broken. | — | — | — |
| | DRIVE ERROR!<br>S/S Key = Clear | Blinks when a rotation control is upset. | — | — | — |
| | STOPPED (Manual)<br>------- | — | — | — | A purple lights. |
| | INTERLOCKED(MAN)<br>------- | Lights (waits) when the pump is interlocked. | — | — | — |

*The white LED bar lights when the pump is turned ON.

# Identification codes

*Each code represents the following information.*

## *Pump*

**IX - B 007 TC R - E ___**
**a b c d e f g**

**a. Series name**

IX

**b. Drive unit**

B

**c. Pump unit (Max flow)**

007 : 7.5 [L/H] 015 : 15 [L/H] 030 : 30 [L/H] 045 : 45 [L/H]

**d. Wet end materials**

| Code | TC | TE | S6 |
|---|---|---|---|
| Pump head | PVDF | | SUS316 |
| Valve | CE | | SUS316 equivalent |
| Valve seat | FKM | EPDM | SUS316 |
| O ring | FKM | EPDM | — |
| Valve gasket | — | | PTFE |
| Diaphragm | PTFE + PFA | | |

**Material code**

PVDF : Polyvinylidene difluoride
FKM : Fluorine-contained rubber
EPDM : Ethylene-propylene rubber
SUS316 : Austenite stainless steel
CE : Alumina ceramic
PTFE : Polytetrafluoroethylene
PFA : Perfluoroalkoxy alkanes

**e. Connection**

R : R thread N : NPT thread G : G thread (TC/TE) F : Flange (TC/TE)
T : ø4×ø6 tube (IX-B 007/015 TC/TE) or ø9×ø12 tube/ø10×ø12 tube (IX-B 030/045 TC/TE)
FJ : JIS flange (S6) FD : DIN flange (S6) FA : ANSI flange (S6)

**f. Power plug**

| Code | E |
|---|---|
| Plug shape | 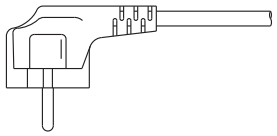 |
| | Europe (1950mm length) |

**g. Special version**

No code : Standard models

□□ : Customized models will be coded.

# Installation

***This section describes the installation of the pump, piping and wiring. Read through this section before work.***

**Points to be observed**

Observe the following points when installing the pump.

- Risk of electrical shock. Be sure to turn off power to stop the pump and related devices before service is performed.
- If you notice any abnormal or dangerous conditions, suspend operation immediately and inspect/solve problems.
- Do not place explosive or flammable material near the pump.
- Use of a damaged pump could lead to an electric shock or death.

## Pump mounting

*Select an installation location and mount the pump.*

**Necessary tools**

- Four M6 bolts (pump mounting)
- Adjustable wrench or spanner

### *Floor mounting*

**1** Select a suitable place.

Always select a flat floor free of vibrations. See page 10 for detail.

**2** Anchor the pump with four M6 bolts.

Be sure to fix the pump at four points.

NOTE

Select a level location, or the flow may reduce.

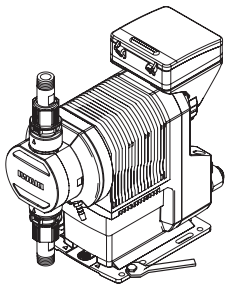

## *Wall mounting*

### ■ Mounting

**1** Select a suitable place.

Select a rigid vertical wall on which the pump is mounted. Use the anchorage points guide (see page 93) and drill four holes to have your M6 anchor nuts.

**2** Remove the six (6) M4 screws and the detachable pump base.

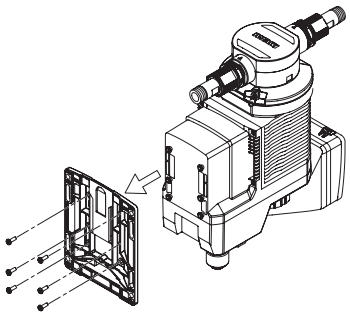

**3** Use four (4) M6 anchor bolts and fix the pump base onto the vertical wall.

The pump base have a mounting direction, the push mark upward.

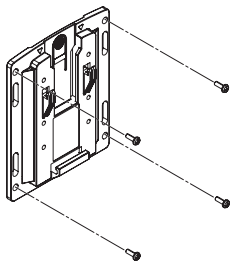

**4** Hang the pump onto the pump base.

The inverted triangles on the base shows the location where the pump is to be hooked.

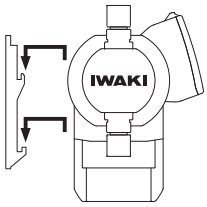


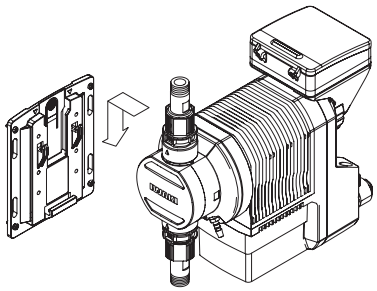

**5** Slide in the attached mounting adapter to the upper side of the base.

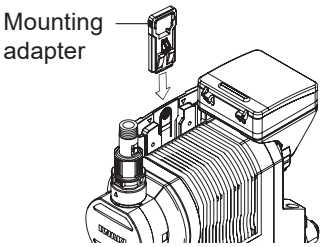


**6** Check the pump is held vertical and won't move.

Make sure the pump is held tight again. Do not drop or damage.

## ■ Demounting

**1** Press the push mark and remove the mounting adapter from the base.

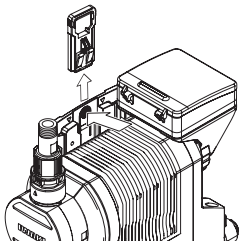

**2** Push the pump toward to the wall to unhook/demount the pump from the base.

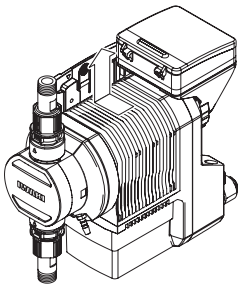

# Console positioning

*The 4-position control unit and 5-position rear case can be adjusted to the best position.*

**Necessary tools**

- Phillips screwdriver

## ■ Control unit

**1** Turn the control unit to the best position.

It can turn clockwise and “sit” at the 3 o’clock position or counterclockwise at the 9 and 6 o’clock positions.

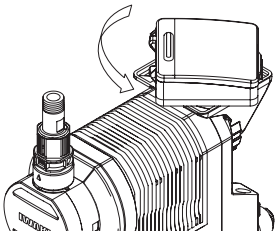

## ■ Rear case

**1** Remove the cap and loosen the screw (a few turns).

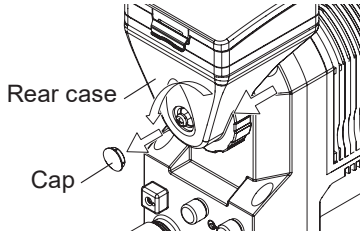


**2** Adjust the rear case to the best direction.

It can turn clockwise/counter-clockwise and “sit” at the 35° and the 70° positions from the top position.

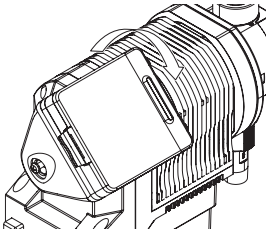

**3** Tighten the rear case with the screw and remount the cap.

Make sure it is fasten tight and won’t move.

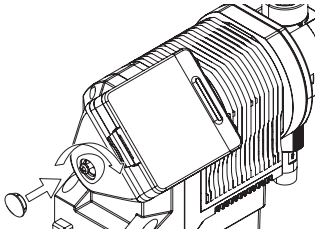

**4** Turn the control unit to the upright position as necessary.

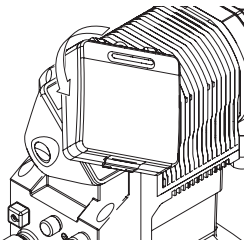

# Plumbing

## ■ Piping layout

**Flooded suction application**

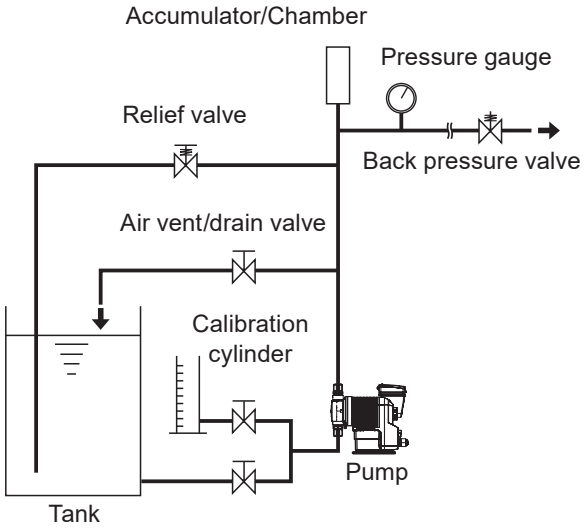


**Suction lift application**

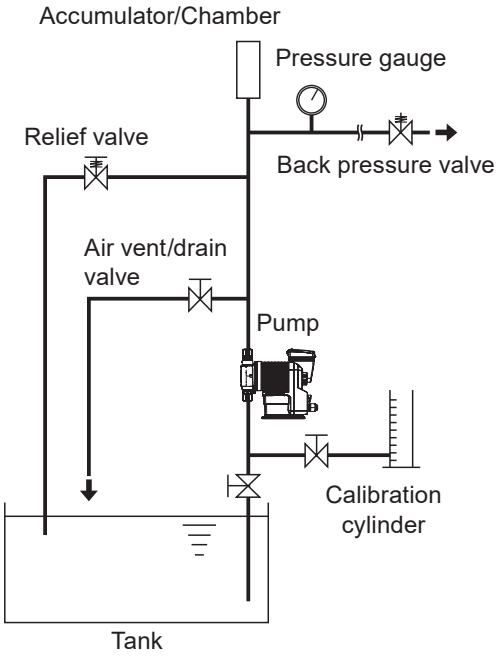


NOTE

- The suction line I.D. should be equal to or wider than the I.D. of the pump.
- When handling liquids that generate gas bubbles (sodium hypochlorite or hydrazine solution), install the pump in a cool and dark place. Flooded suction installation is strongly recommended.

## *Tube connection*

a. Pass the tube through the fitting nut and stopper, and then slide it down onto the adaptor as far as it will go.

b. Put the tube end (adaptor) onto the fitting. Then hand tighten the fitting nut.

c. Retighten the fitting nut by turning it further 180 degrees with an adjustable wrench so it crushes into the tube a little.

*Do not use excessive force when tightening the plastic fitting nut.

*When removing the connection, if the adapter has become stuck in the crushed tube and the stopper and those parts cannot be separated, contact us for a new adapter/stopper set.

*Do not reuse the same crushed tube end to reseal the tubing. Cut off the end and start with new tubing to ensure a new seal is established.

*Some tubing may be too firm to be pushed onto the adapter to the designated depth shown above. If so, wet the tapered area of the adapter to give it some lubricity, or immerse the tube end into a warm water (40°C or below) to give it more flexibility.

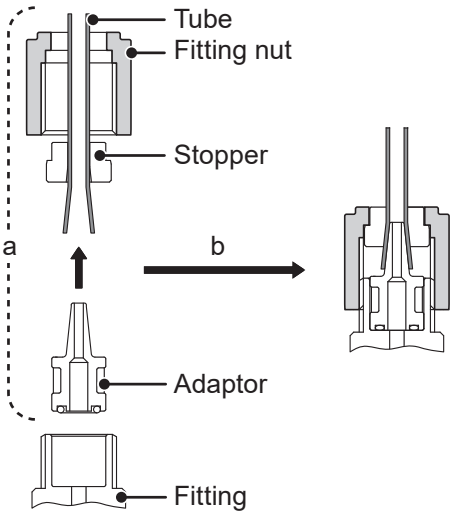

# Drain port (vent hole)

*Leaked liquid drains off through the drain port if the diaphragm is ruptured accidentally.*
*Use a chemically-resistant tube to the port and a drain tank to safely collect the liquid.*

NOTE

- Do not plug the drain port. The port functions as a vent hole to keep the pressure behind the diaphragm back atmospheric.
- Do not immerse the end of a drain tube in drained liquid, or the liquid may be pumped up into the compartment behind the diaphragm back.
- Liquid in the drain tank is the sign of the damaged diaphragm. Immediate inspection or repair is necessary. Do not leave this condition as it is. Fumes or vapors from certain solutions may move up into the pump via the drain tube and attack its inside.

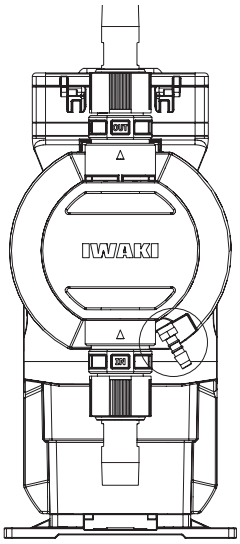


Drain port (vent hole)
*Applicable tube size
Inner diameter: 6mm
Outer diameter: 12mm or below

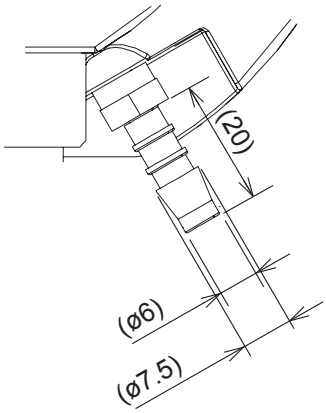


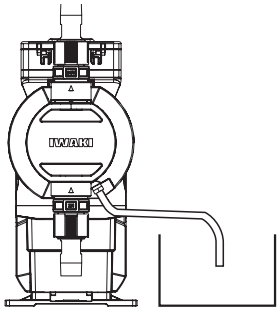


Empty drain tank

Do not locate the drain tube end below the liquid level.

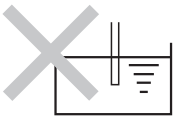

Do not take in fumes from corrosive chemicals such as sodium hypochlorite.

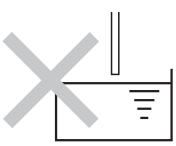

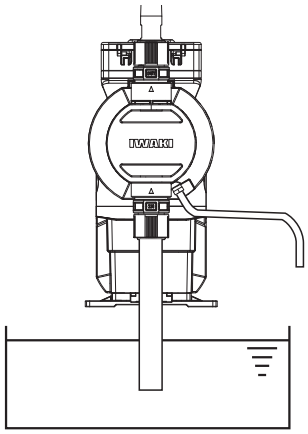


Noncorrosive chemicals in a supply tank. The drain tube end must stay above the liquid level.

# Wiring

*Wiring for power voltage, earthing and external signals.*

**Points to be observed**

Observe the following points during wiring work.

- Electrical work should be performed by a qualified electrician. Always observe applicable codes or regulations.
- Do not apply power other than that specified on the nameplate. Otherwise, failure or fire may result.
- Do not perform wiring work while electric power is on. Otherwise, an electrical shock or a short circuit may result. Be sure to turn off the power before wiring work.
- Be careful for electric power not to be turned on during work.
- Replacement of a power cable should be conducted by a manufacturer, his agency or a skilled person. Otherwise, an accident may result.



## *End terminals*

*See the following diagram for detail.*

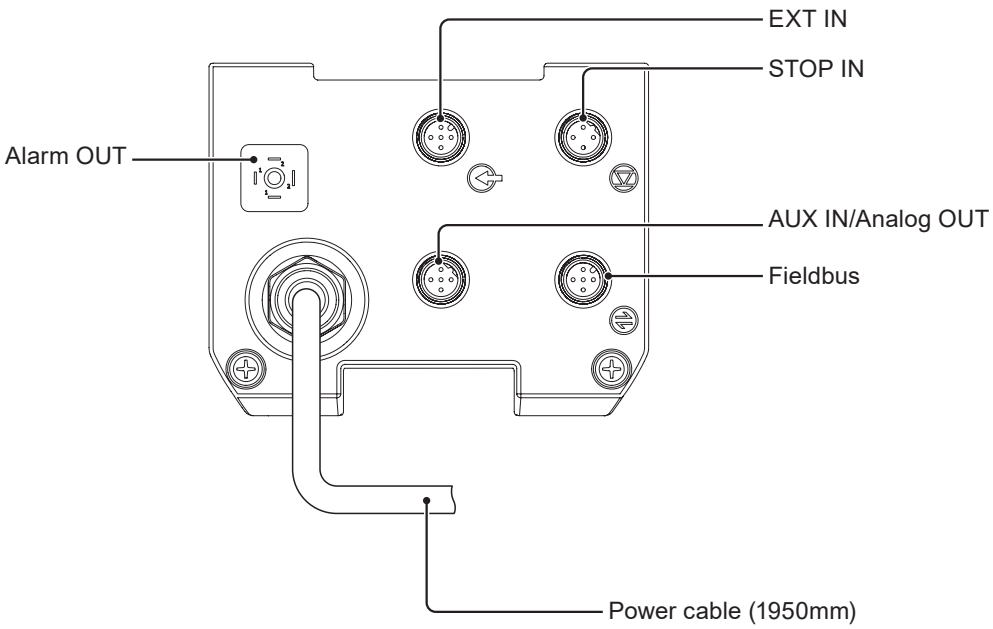

## *Power voltage/Earthing*

**Points to be checked**

- Check that power voltage is turned off.

**1** Insert the plug all the way seated in a socket.

NOTE

- Do not share a power source with a high power device which may generate a surge voltage. Otherwise an electronic circuit may fail. The conductive noise caused by an inverter also affects the circuit.
- Energize the pump with a power voltage via a mechanical relay or switch. Do not fluctuate the voltage, or CPU may malfunction. See page 37 for the precautions for ON-OFF control cycling power.

**Apply power sharply**

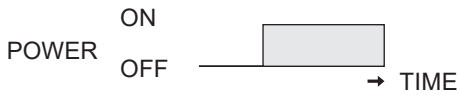


**Do not apply gradually**




**Surge voltage**

The electronic circuit in the control unit may fail due to a surge voltage. Do not place the pump close to a high power device of 200V or more which may generate a large surge voltage. Otherwise, take any of the following measures.

- Install a surge absorption element (such as a varistor with capacity of 2000A or more) via power cable or,

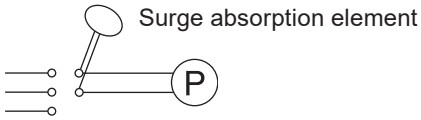


Recommended varistors:
Panasonic ERZV14D431
KOA NVD14UCD430
See manufacturer's catalogues for detail.

- A noise cut transformer via the power cable.

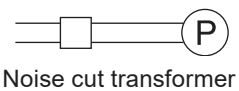


Noise cut transformer

**Precautions for ON-OFF control by cycling power**

The control unit is equipped with a CPU. To ensure the CPU to work properly, always start/stop the pump with the STOP signal for ON-OFF control. Try not to turn on and off the main power. Otherwise, observe the following points:

- Ensure the minimum OFF time of 10 minutes.
- When using a mechanical relay for ON-OFF operation, its contact capacity should be 5A or more. Or a contact point may break.
- If a mechanical relay with the contact capacity of 5A is used, the maximum allowable number of power cycles is limited to 150,000 times. Use the contact capacity of 10A or more when the power cycles exceed that number or when a power source is shared with a large capacity equipment which may cause a surge voltage and damage a contact point.
- Even the large mechanical relay may not last forever. If further longer life is desirable, use a SSR (Solid State Relay) such as the OMRON G3F that does not have a mechanical contact point. See manufacturer's catalogues for detail.



## *Signal wire connection*

**Points to be checked**

- Check that power voltage is turned off.

*Use our optional connector cables below or purchase DIN 4- and 5-pin female connector cables when using signal input and output.*

*Optional 5m DIN connector cables for:*

*The EXT input signal (or Binder 99-0436-10-05 Series 713)*

*The STOP input signal (or Binder 99-0430-15-04 Series 715)*

*The AUX input/Analog output signals*

*The Alarm output signal (or Hirschmann GDS307)*

NOTE

- Do not lay on these signal cables in parallel with a power cable. Otherwise the electromagnetic induction noise is generated and malfunction or failure may result.
- When using an external SSR for signal input, such a semiconductor relay must be capable of handling the maximum applied voltage from the pump.
  See specs of the selected SSR. The following SSRs at least meets the requirement.
  – OMRON G3FD-102S or G3FD-102SN
  – OMRON G3TA-IDZR02S or G3TA-IDZR02SM
- When using an external mechanical relay for signal input, its minimum application load should be 5mA or below.
- Insert the DIN 4- or 5-pin female connector as far as it will go and then tighten the skirt to make a secure connection.

*Use either an external no-voltage contact or an external open collector for the EXT input signal.

## ■ EXT IN

To make pulse-, batch-, interval batch- and analog-control operation or to activate interlock function, connect signal wires to the EXT terminals via the DIN 5-pin connection.

***When using an open collector:***

Pay attention to polarity. The pulse (1) pin and the interlock (2) pin are plus (+), and the COM (4) pin is minus (-).

**When using analog control:**

Pay attention to polarity. The analog (3) pin is plus (+), and the COM (4) pin is minus (-). Internal resistance is 200Ω.

***When using a no-voltage contact:***

Use a mechanical relay designed for an electronic circuit. Its minimum application load should be 5mA or less.

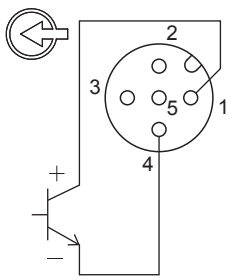


Wiring for Pulse-, Batch-, Interval batch-control

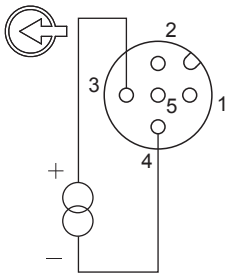


Wiring for Analog control

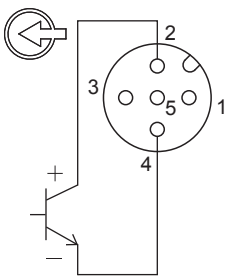


Wiring for Interlock function

1 : Pulse (Brown)
2 : Interlock (White)
3 : Analog (Blue)
4 : COM (Black)
5 : 12VDC30mA or below (Green)

*Each wire of our optional cable is coloured as above. The terminal pin 5 is an output and is not used. Do not short-circuit the pin 5 and pin 4 (COM).

## ■ STOP IN

To activate STOP function, connect signal wires to the STOP terminal via the DIN 4-pin connection.

***When using an open collector:***

Pay attention to polarity. The STOP (1) pin and the Pre-STOP (2) pin are plus (+), and the COMs (3 and 4) pins are minus (-).

***When using a no-voltage contact:***

Use a mechanical relay designed for an electronic circuit. Its minimum application load should be 5mA or less.

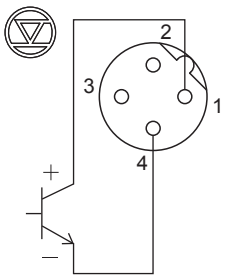


Wiring for STOP function

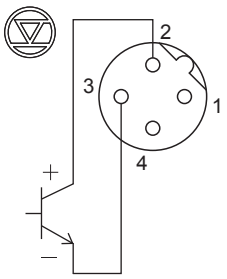


Wiring for Pre-STOP function

1 : STOP (Brown)
2 : Pre-STOP (White)
3 : COM (Blue)
4 : COM (Black)

*Each wire of our optional cable is coloured as above.

NOTE

Our optional cable has 5 wires. Cut off a green wire to use it with the DIN 4-pin connector.

## ■ AUX IN/Analog OUT

To activate the AUX function or to use the analog output, connect signal wires to the AUX terminal or the 4-20mA output terminal via the DIN 5-pin connection.

***When using an open collector (for AUX IN):***

Pay attention to polarity. The AUX (3) pin is plus (+), and the COM (4) pin is minus (-).

***When using a no-voltage contact (for AUX IN):***

Use a mechanical relay designed for an electronic circuit. Its minimum application load should be 5mA or less.

***When using analog output:***

Pay attention to polarity. The 4-20mA (1) pin is minus (-), and the 4-20mA (5) pin is plus (+). The max load resistance is 300Ω.

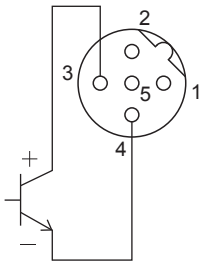


Wiring for AUX function

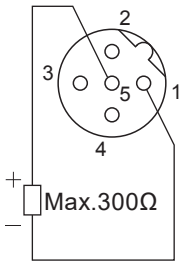


Wiring for 4-20mA output

1 : 4-20mA (Brown)
2 : N.C. (White)
3 : AUX (Blue)
4 : COM (Black)
5 : 4-20mA (Green)

*Each wire of our optional cable is coloured as above

*Do not use the N.C. pin which is used for maintenance service.

NOTE

When both the 4-20mA input terminal (EXT IN) and the 4-20mA output terminal (AUX IN/Analog OUT) are electrically-connected to the same external device such as user's PLC, channels of such a device must be electrically-isolated each other. Otherwise, use the isolator to either (or both) current signal line(s).

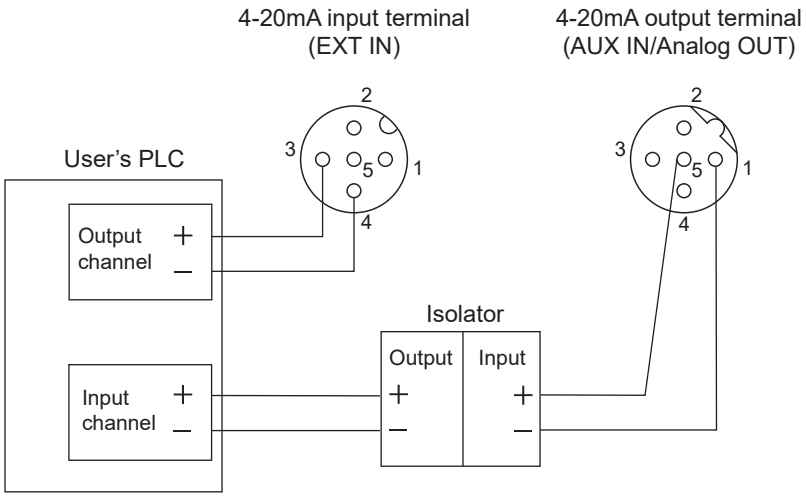

## ■ Alarm OUT (DIN connector)

To transmit the signal to an external device, connect signal wires to the OUT terminal via the DIN 4-pin connection.

***Alarm OUT 1 (OUT 1) <Mechanical relay>: Enable or disable the alarm outputs of batch completion, STOP, Pre-STOP, interlock, motor overload (/drive error) and leak detection individually.***

*The leak detection option only is enabled at the factory default setting.

***Alarm OUT 2 (OUT 2) <PhotoMOS relay>: Enable or disable the alarm outputs of the volume proportional pulse, batch completion, STOP, Pre-STOP, interlock, motor overload (/drive error) and leak detection individually.***

*The interlock option only is enabled at the factory default setting.

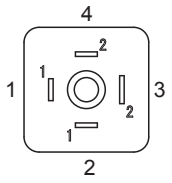


1 : Alarm OUT 1 (White)
2 : Alarm OUT 1 (Brown)
3 : Alarm OUT 2 (Black)
4 : Alarm OUT 2 (Blue)

*Each wire of our optional cable is coloured as above.

**Mounting direction of the output signal cable**

Mount the DIN square connector cable in the following direction and secure it with a M3 screw.

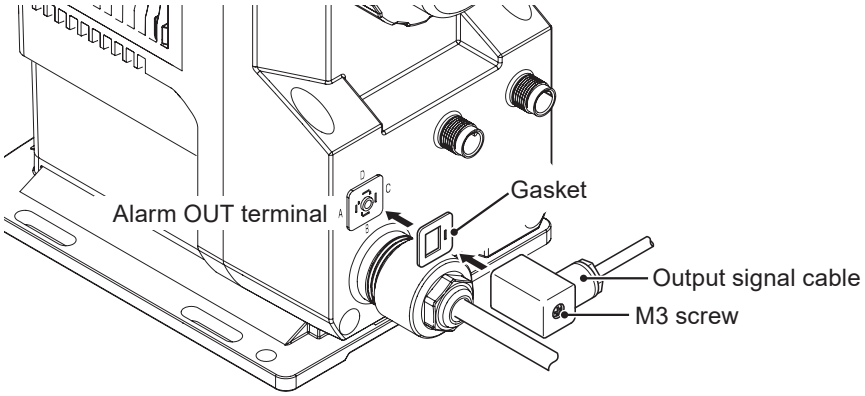

# Operation

***This section describes pump operation and setting. Run the pump after plumbing and wiring are completed.***

## Before operation

*First check piping and wiring are correct. And then make commissioning before starting operation.*

### *Points to be checked*

*Before operation, check if:*

- Liquid level in a supply tank is enough.
- Piping is securely connected and is free from leakage and clogging.
- Discharge/suction valves are opened.
- Power voltage range is correct.
- Electrical wiring is correct and is free from the risk of short circuit and electrical leakage.

### *Retightening of pump head fixing bolts*

**Important**

The pump head fixing bolts may loosen when plastic parts creep due to temperature change in storage or in transit. This could lead to a chemical leak. Tighten the bolts diagonally and evenly by the rated torque at each model before initial operation and at regular intervals (every three months).

**Tightening torque**

| Model code | Torque | Bolts | Number of bolts |
|---|---|---|---|
| IX-B007/-B015/-B030/-B045 | 3 N•m | M5 hexagon head bolt | 4 |

## *Commissioning*

*Always make commissioning when first mounting the pump in your system or resuming operation after a long period of stoppage.*

**1** Open an air vent and a suction line.

Do not open a calibration line if any.

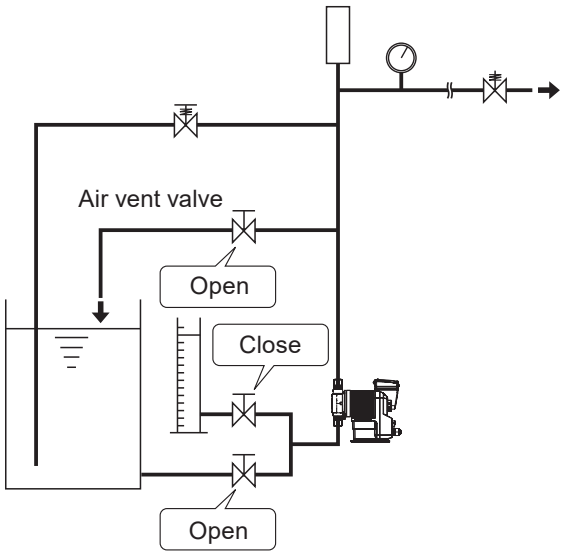


**2** Supply the rated power voltage to the pump.

**3** Start the pump at a low flow rate and gradually increase it to a target rate.

Continue operation for 10 minutes and check the pump and plumbing for any abnormality.

**4** Close an air vent line to introduce liquid to a main line.

## *Before a long period of stoppage (One month or more)*

*Clean wet ends and the inside of piping.*

- Run the pump with clean water for about 30 minutes to rinse chemicals off.

*Before unplugging the pump*

- Always stop the pump by key operation and wait for three seconds before unplugging the pump. Or the last key operation may not be put in memory, and the pump unintentionally starts to run as powered on, discharging liquid.

*When the pump does not transfer liquid at resuming operation.*

- Clean the valve sets and remove foreign matters.
- If air is in the pump head, expel air through the above commissioning procedure.

# Perform a calibration

*Periodically make calibration to monitor an accurate flow through control display.*
*The pump is calibrated by pumping clean water at the maximum operating pressure before shipping (in the absence of a designation by a user), however, make calibration again in an actual operating condition as necessary. Follow the calibration process on the next page.*

NOTE

The flow rate shown on the screen is a calculated value based on calibration and is not an actual flow rate.

Calibration is made to determine liquid volume per shot. Arrange your piping system according to the guide below to ensure the calibration is made correctly.

**Suggested piping layout**

Use a calibration cylinder connected to a suction line.

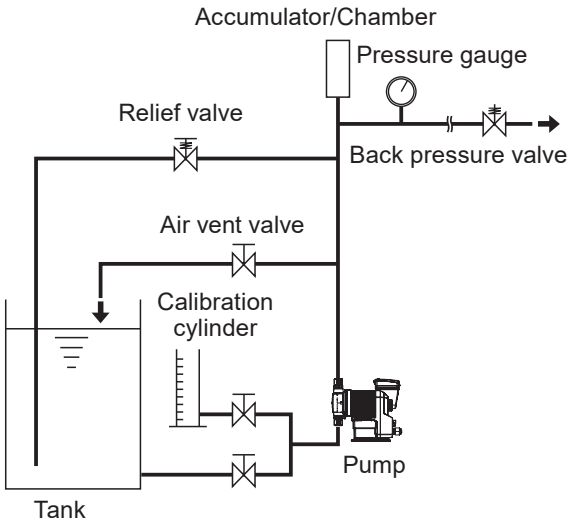


**Bad example**

Do not immerse a calibration tube into liquid in a calibration cylinder. Tube volume is added to the liquid volume to be measured, and calibration will be upset.

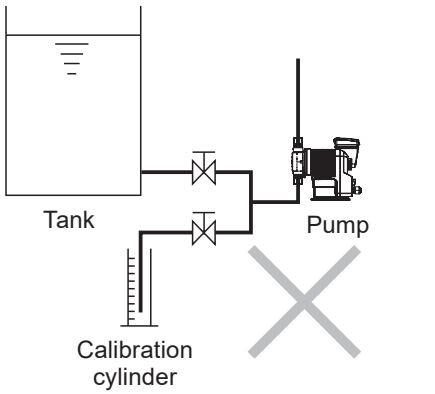


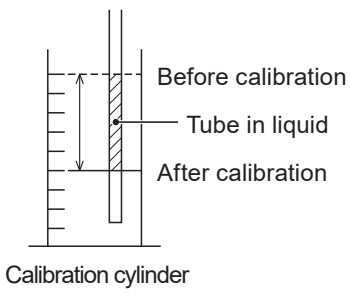

## *Calibration process*

*Obtain accurate flow volume per shot (e.g. IX-B007: 0.6mL/shot, IX-B015: 1.3mL/shot, IX-B030: 2.5mL/shot, IX-B045: 3.8mL/shot) by dividing the delivered liquid volume by the number of strokes.*

**1** Fill a calibration cylinder with liquid.

Open a calibration line to lead liquid from a supply tank to a calibration cylinder. And then close the suction line and measure liquid volume in the cylinder.

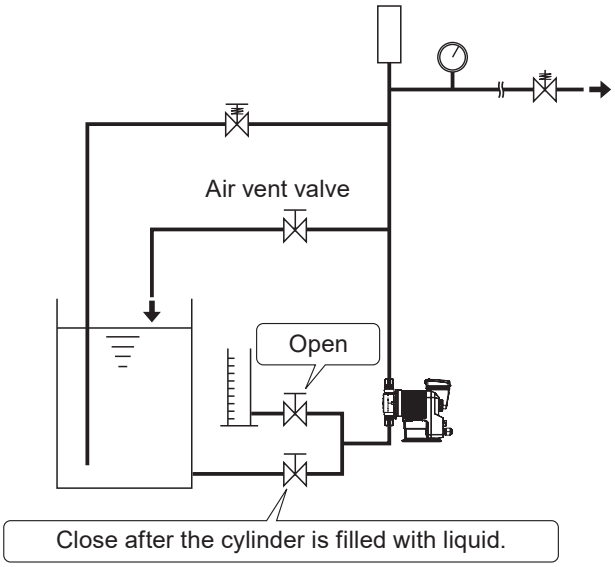


**2** Supply the rated power voltage to the pump and set a flow rate in the manual mode.

See page 14 for detail.

NOTE

The calibration accuracy won't change at any flow rate. The higher the flow rate is, the shorter time it takes, and vice versa.

**3** Select the calibration mode through the menu screen.

See page 52 for detail.

**4** Calibration operation setting

Set a waiting time and the number of strokes. The number of strokes should be determined depending on liquid volume in the calibration cylinder.

Waiting time to start calibration operation: 10(default)-999s

Number of strokes: 60(default)-120ST

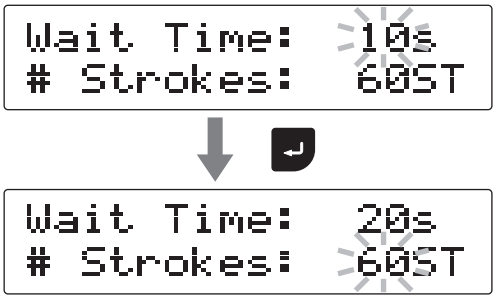


Use UP and DOWN keys to set a waiting time.

Use UP and DOWN keys to set the number of strokes.

**5** Start calibration operation.

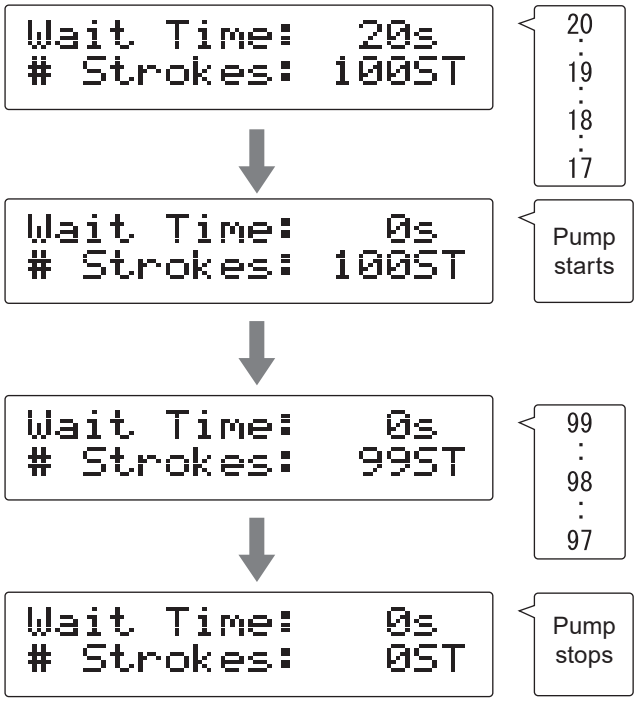


**6** Measure liquid volume in the calibration cylinder again.

**7** Enter how much liquid has reduced.

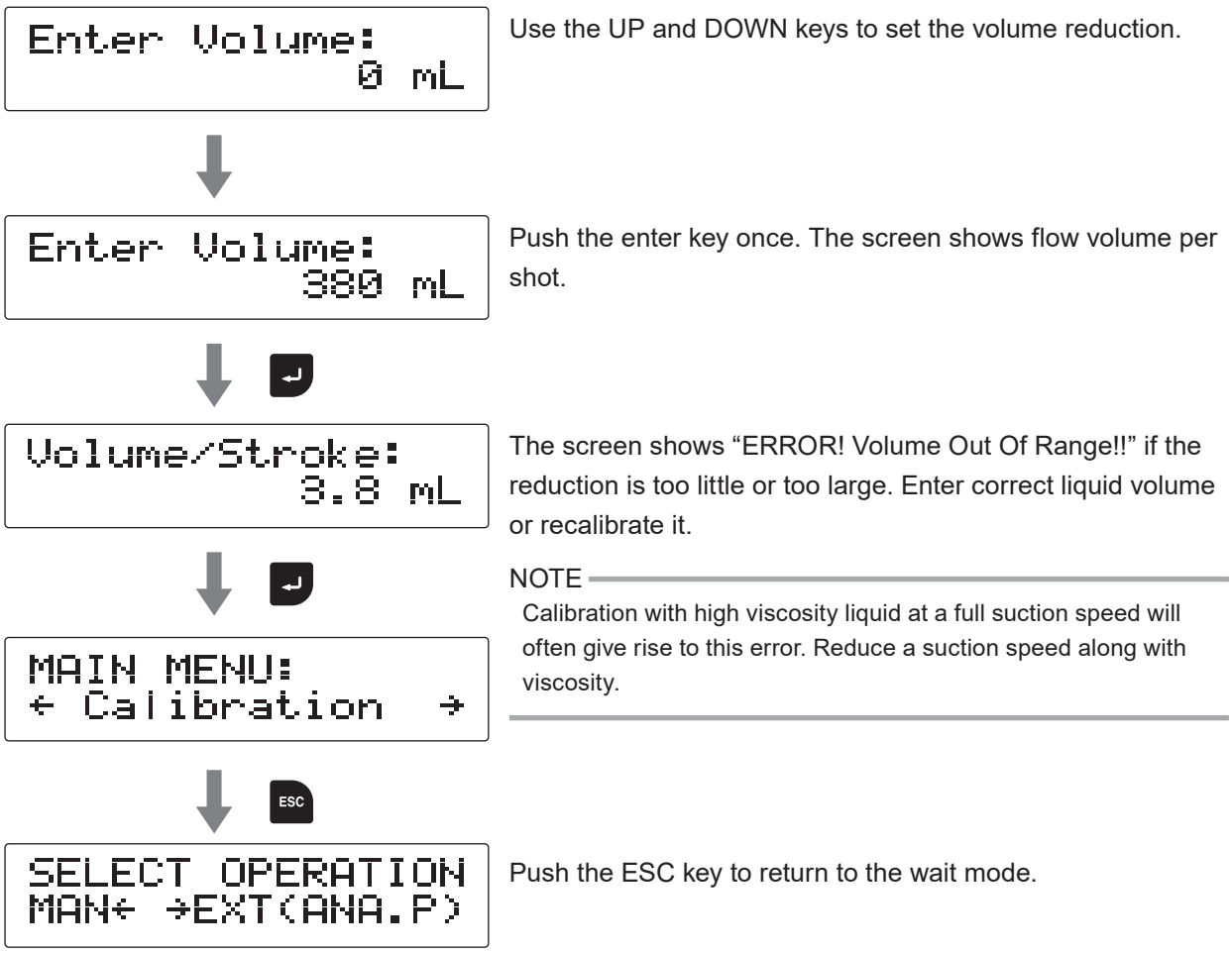


NOTE

Calibration with high viscosity liquid at a full suction speed will often give rise to this error. Reduce a suction speed along with viscosity.

# Operation setting

*The setting is made with the controller. The pump behaviour differs with each control mode.*

| Menu | Control mode/Function | Parameter | | Factory default |
|---|---|---|---|---|
| Mode selection | — | MAN/EXT | | MAN |
| External controls | Analog preset control | 4-20mA/ 0-20mA/ 20-4mA/ 20-0mA | | 4-20mA |
| | Analog variable control | SP1 current | 0.0mA-20.0mA | 4.0mA |
| | | SP1 flow rate | 0mL/H, 7.50mL/H-7.50L/H (B007) | 0mL/H |
| | | | 0mL/H, 15.0mL/H-15.0L/H (B015) | 0mL/H |
| | | | 0mL/H, 30.0mL/H-30.0L/H (B030) | 0mL/H |
| | | | 0mL/H, 45.0mL/H-45.0L/H (B045) | 0mL/H |
| | | SP2 current | 0.0mA-20.0mA | 20.0mA |
| | | SP2 flow rate | 0mL/H, 7.50mL/H-7.50L/H (B007) | 7.50L/H |
| | | | 0mL/H, 15.0mL/H-15.0L/H (B015) | 15.0L/H |
| | | | 0mL/H, 30.0mL/H-30.0L/H (B030) | 30.0L/H |
| | | | 0mL/H, 45.0mL/H-45.0L/H (B045) | 45.0L/H |
| | Pulse control* | 0.000625mL/PLS-15.000000mL/PLS (B007) | | 0.006250mL/PLS |
| | | 0.001250mL/PLS-30.000000mL/PLS (B015) | | 0.012500mL/PLS |
| | | 0.002500mL/PLS-60.000000mL/PLS (B030) | | 0.025000mL/PLS |
| | | 0.0037500mL/PLS-90.000000mL/PLS (B045) | | 0.037500mL/PLS |
| | Batch control* | 0.625mL/PLS-15.000L/PLS (B007) | | 6.2500mL/PLS |
| | | 1.250mL/PLS-30.000L/PLS (B015) | | 12.500mL/PLS |
| | | 2.500mL/PLS-60.000L/PLS (B030) | | 25.000mL/PLS |
| | | 3.750mL/PLS-90.000L/PLS (B045) | | 37.500mL/PLS |
| | Interval batch control* | 0-9 days/ 0-23 hr/ 1-59 min | | 0D: 0H: 1M |
| | | 0.625mL - 15.000L (B007)<br>1.250mL - 30.000L (B015)<br>2.500mL - 60.000L (B030)<br>3.750mL - 90.000L (B045) | | 6.2500mL<br>12.500mL<br>25.000mL<br>37.500mL |
| | Profibus control | Address: 1-126 | | 50 |
| Inputs | STOP | Closed=Pump OFF, Closed=Pump ON | | Closed=Pump OFF |
| | PreSTOP | Closed=Pump OFF, Closed=Pump ON | | Closed=Pump OFF |
| | Interlock | Closed=Pump OFF, Closed=Pump ON | | Closed=Pump OFF |
| | Leak detection | Enable, Disable | | Enable |
| Alarm | OUT1 | Batch Complete, Stop, Pre-Stop, Interlock, Leak Detection, Motor Overload, Drive Error | | Leak Detection: Enable<br>Other alarms: Disable |
| | OUT2 | Volume Prop. PLS, Batch Complete, Stop, Pre-Stop, Interlock, Leak Detection, Motor Overload, Drive Error | | Interlock: Enable<br>Other alarms: Disable |
| Analog output | | SP1 current | 0.0mA-20.0mA | 4.0mA |
| | | SP1 flow rate | 0.00mL/H, 7.50mL/H-7.50L/H (B007) | 0.00mL/H |
| | | | 0.00mL/H, 15.0mL/H-15.0L/H (B015) | 0.00mL/H |
| | | | 0.00mL/H, 30.0mL/H-30.0L/H (B030) | 0.00mL/H |
| | | | 0.00mL/H, 45.0mL/H-45.0L/H (B045) | 0.00mL/H |
| | | SP2 current | 0.0mA-20.0mA | 20.0mA |
| | | SP2 flow rate | 0.00mL/H, 7.50mL/H-7.50L/H (B007) | 7.50L/H |
| | | | 0.00mL/H, 15.0mL/H-15.0L/H (B015) | 15.0L/H |
| | | | 0.00mL/H, 30.0mL/H-30.0L/H (B030) | 30.0L/H |
| | | | 0.00mL/H, 45.0mL/H-45.0L/H (B045) | 45.0L/H |
| Others | Suction speed | 100%/ 75%/ 50%/ 25% | | 100% |
| | Max flow rate | 7.50mL/H-7.50L/H (B007) | | 7.50L/H |
| | | 15.0mL/H-15.0L/H (B015) | | 15.0L/H |
| | | 30.0mL/H-30.0L/H (B030) | | 30.0L/H |
| | | 45.0mL/H-45.0L/H (B045) | | 45.0L/H |
| | AUX speed | 7.50mL/H-7.50L/H (B007) | | 7.50L/H |
| | | 15.0mL/H-15.0L/H (B015) | | 15.0L/H |
| | | 30.0mL/H-30.0L/H (B030) | | 30.0L/H |
| | | 45.0mL/H-45.0L/H (B045) | | 45.0L/H |
| | Diaphragm position | MAX OUT Pos./ MAX IN Pos. | | MAX OUT Pos. |
| | Buffer | Enable, Disable | | Disable |
| | Anti-Chattering | 1 msec, 2 msec, 5 msec | | 5 msec |
| | Output logic (OUT1) | Normally Open / Normally Close | | Normally Open |
| | Output logic (OUT2) | Normally Open / Normally Close | | Normally Open |
| | Unit | Litter, US Gallon | | Litter |
| | Keypad lock | 00000-99999 | | 00000 |
| | Language | English, Dutch, French, Danish, Spanish, German | | English |

*For these control modes, the calibrated flow volume per shot is applied to the minimum settable flow volume.

## *Setting flow chart*

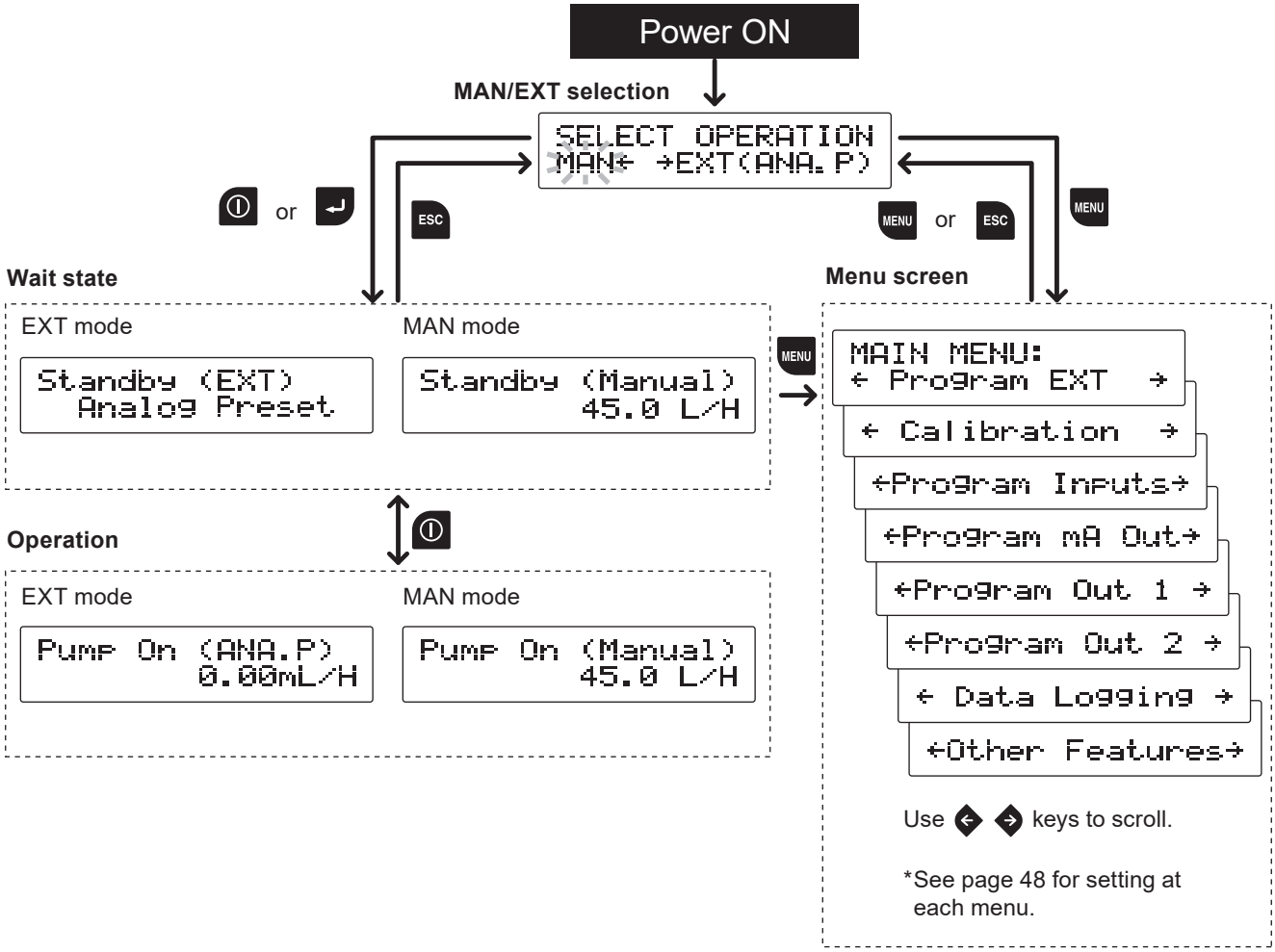


*To revert back to the factory default setting with the pump calibrated, turn on power while pressing the ESC key.

## *Menu screen*

*Push the MENU key in the MAN/EXT selection mode and call up the menu screen. Use the right and left keys to scroll through each menu item and then push the enter key to make a selection. Pushing the MENU key again or ESC key in the menu screen, the previous mode will be recalled.*

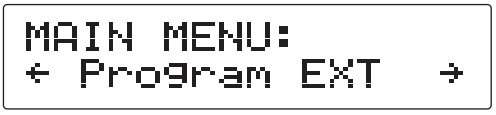


**EXT mode selection**
The pump can run in four different operating modes of Analog, Pulse, Batch, Interval Batch, and Profibus for the external signal. See pages 14-18 and 49 for detail.




**Calibration**
Calibrate the pump to obtain a correct flow rate on the screen. See pages 44 and 52.




**Signal input setting**
Set the inputs of the STOP, Pre-STOP, interlock functions, and diaphragm rupture detection. See pages 19, 20, 52 and 53.




**Analog output setting**
Set the output current at SP1 and 2 flow rates to configure the analog signal output behaviour. See pages 23 and 54.




**Alarm output setting (OUT 1)**
Enable or disable the output of the batch completion, STOP, Pre-STOP, interlock, diaphragm rupture detection, overload/failed speed detection, and/or drive error detection functions. See pages 22 and 55.




**Alarm output setting (OUT 2)**
Enable or disable the output of the batch completion, STOP, Pre-STOP, interlock, diaphragm rupture detection, overload/failed speed detection, drive error detection, and/or volume proportional pulse functions. See pages 22 and 57.




**Data logging**
The pump can display operating time, total flow volume, power-on time, the number of ON/OFF and software version. See page 58.




**Setting of other functions**
Set a suction speed, a max flow rate, an AUX speed, a diaphragm position, an anti-chattering time, butter ON/OFF, output logics, a flow rate unit and your language or so. See pages 23, and 59-62.

## ■ EXT mode selection

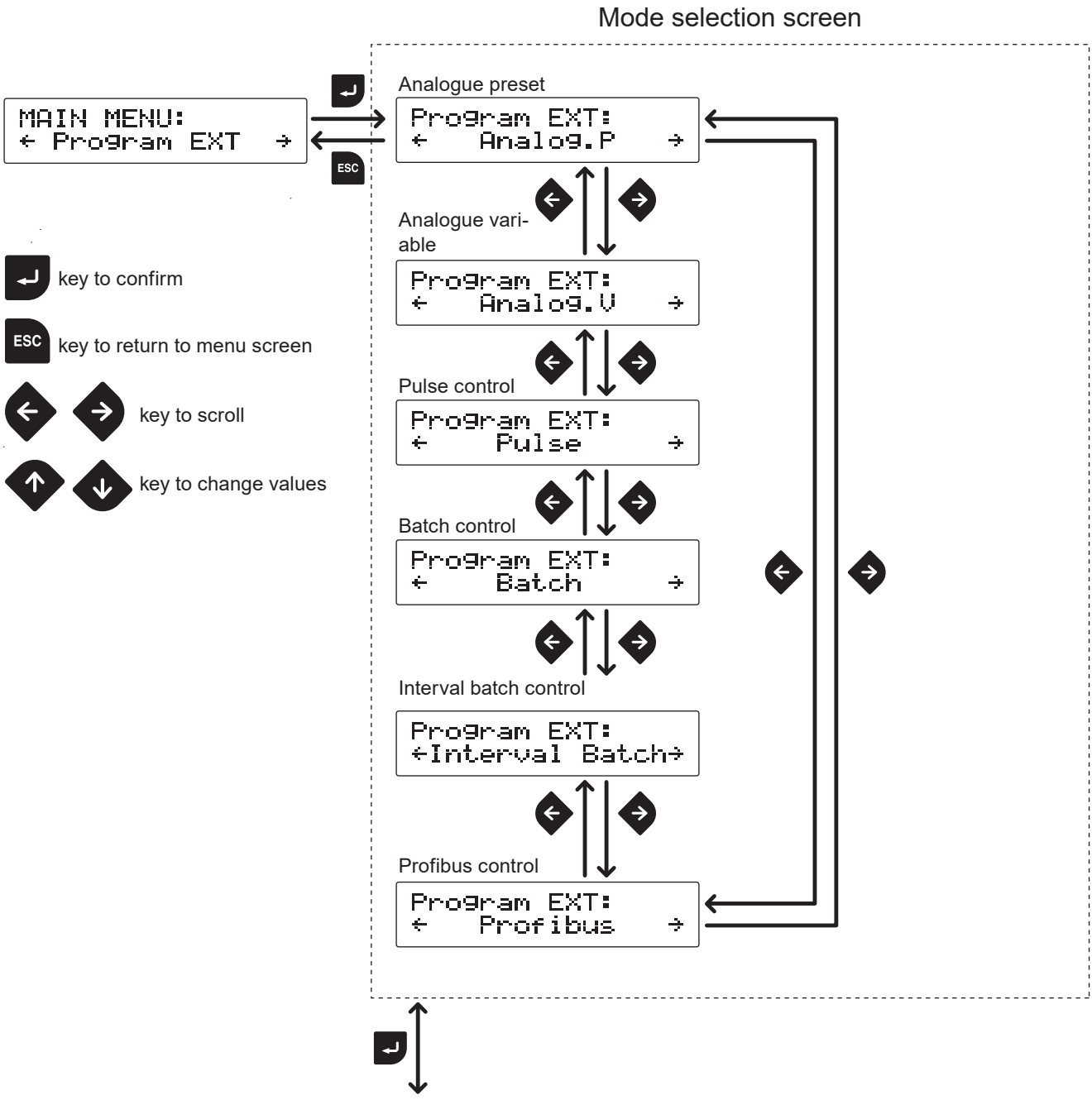


<To next page>

## Mode setting screen

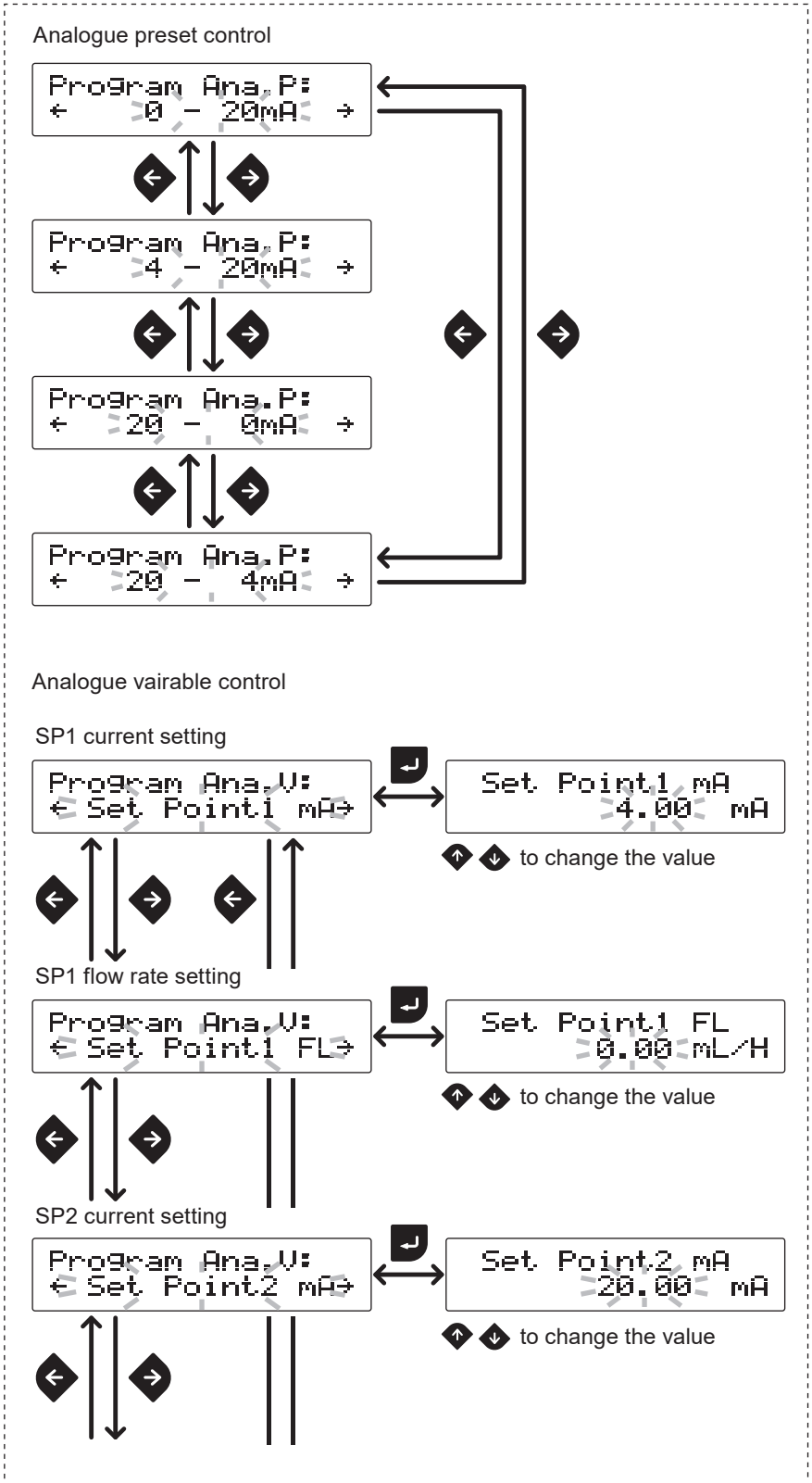


<To next page>

SP2 flow rate setting

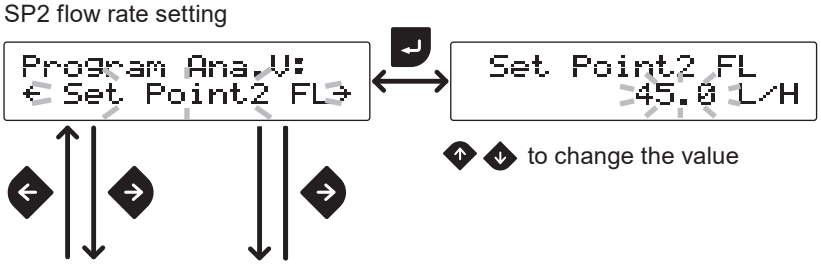


Behavioural pattern selection

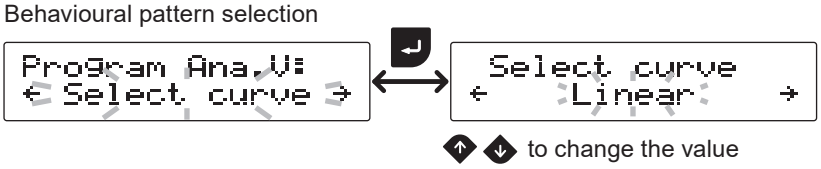


Pulse control




Set flow volume per pulse.

Batch control




Set flow volume per pulse.

Interval batch control

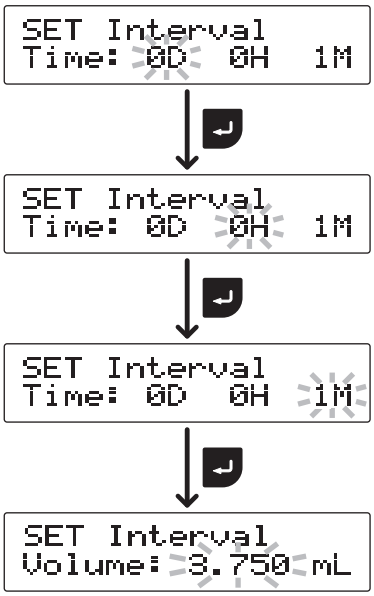


Set “Day”.

Set “Hour”.

Set “Minute”.

Set a flow rate.

Profibus control

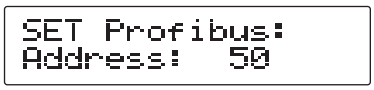


Set an address.

## ■ Calibration




*See the “Calibration process” section on page 44 for detail.

key to confirm

ESC key to return to menu screen

key to select

key to change values

## ■ Signal input setting

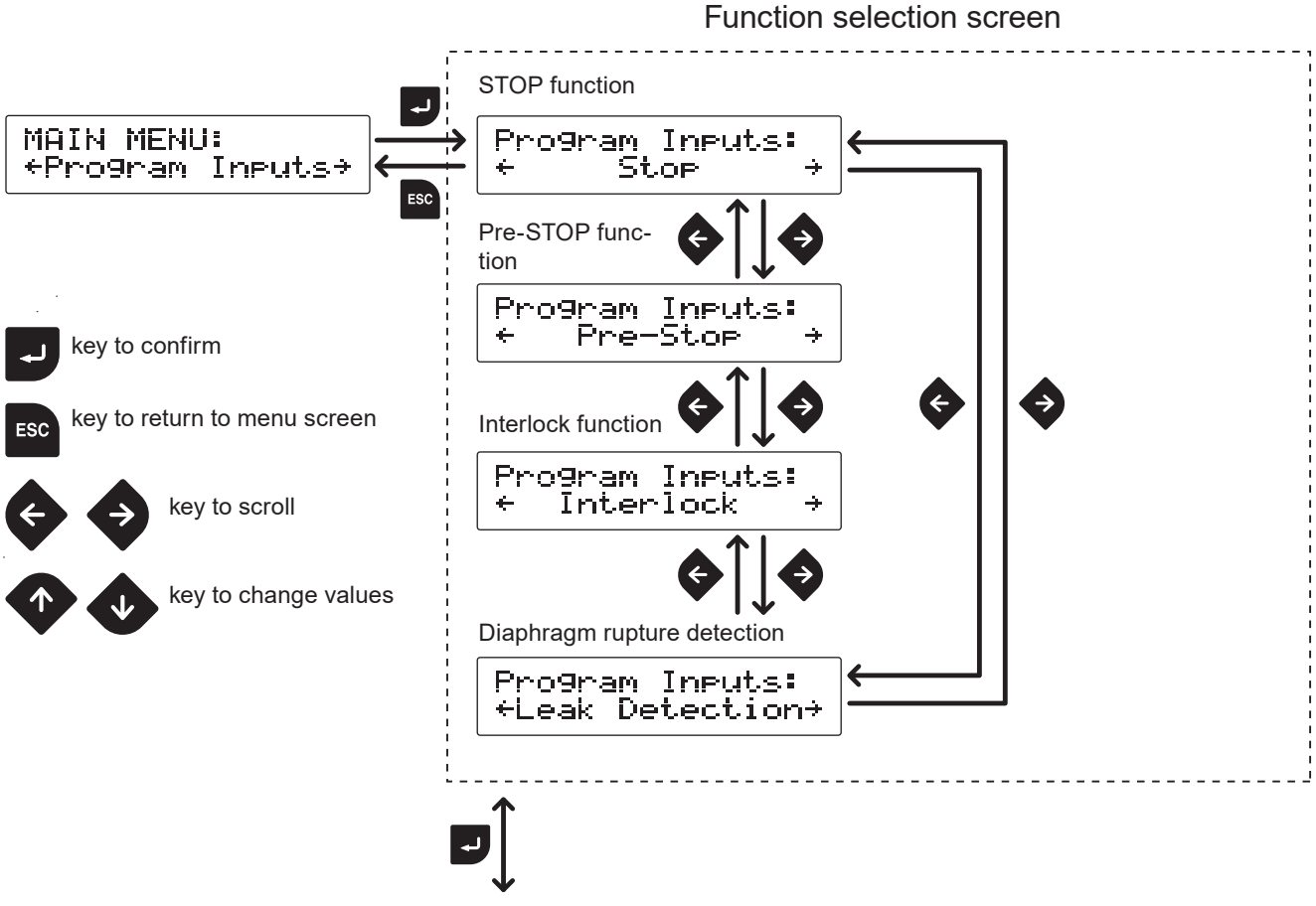


key to confirm

ESC key to return to menu screen

key to scroll

key to change values

<To next page>

## Function setting screen

STOP function

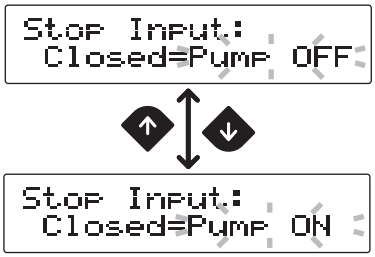


Closed=Pump OFF : Pump stops running at contact input.
Closed=Pump ON : Pump starts to run at contact input.

Pre-STOP function

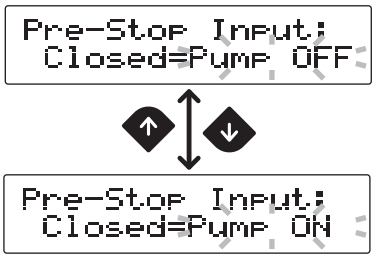


Closed=Pump OFF : Operation LED lights in orange at contact input.
Closed=Pump ON : Operation LED does not lights at contact input.

Interlock function

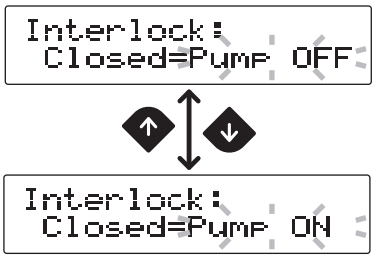


Closed=Pump OFF : Pump stops running at contact input.
Closed=Pump ON : Pump starts to run at contact input.

Diaphragm rupture detection

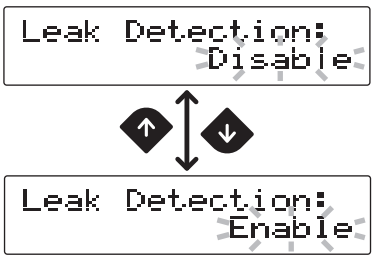


Disable : Rupture detection is not used.
Enable : Rupture detection is used.

## ■ Analogue output setting

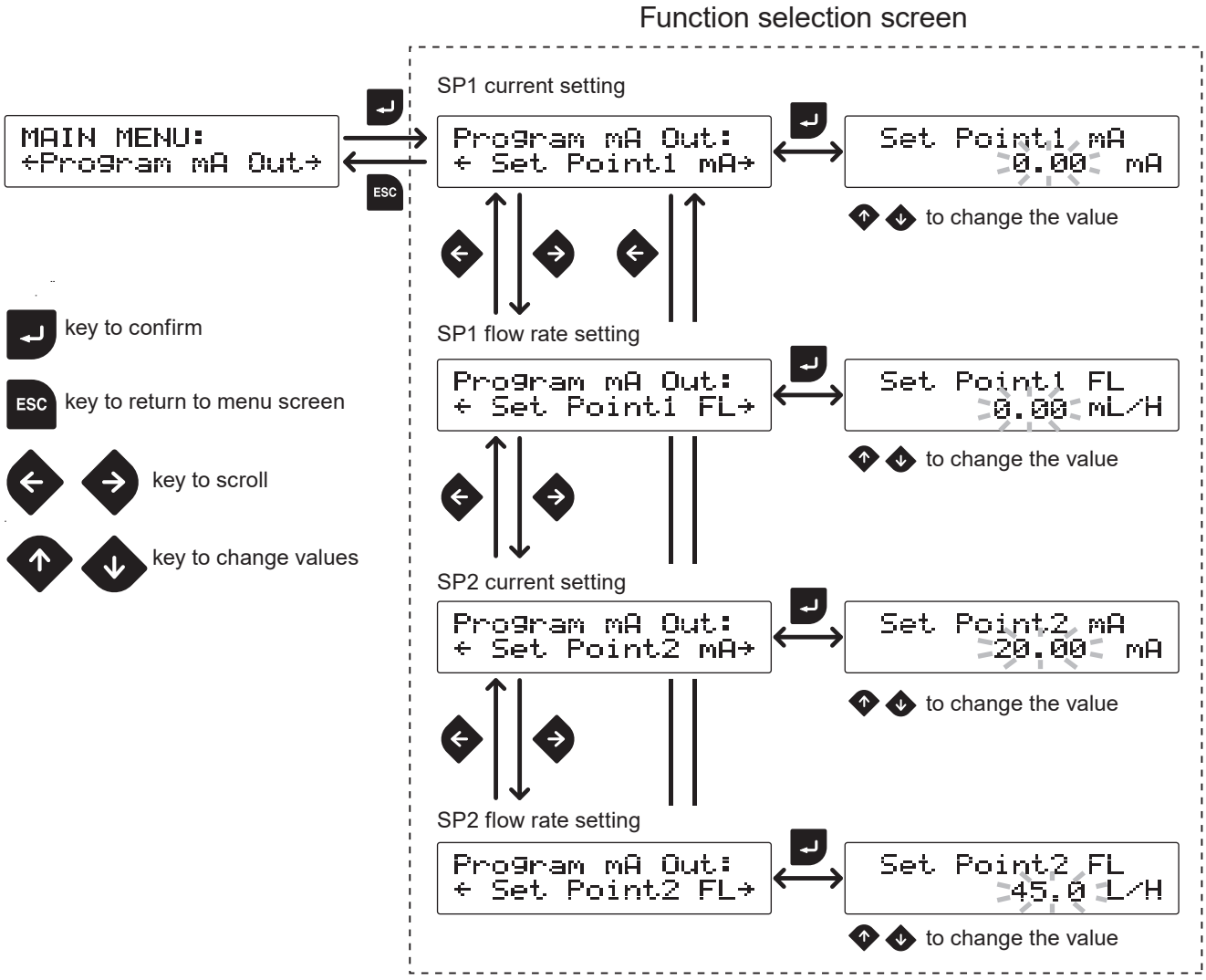

## ■ Alarm output setting (OUT 1) <Mechanical relay>

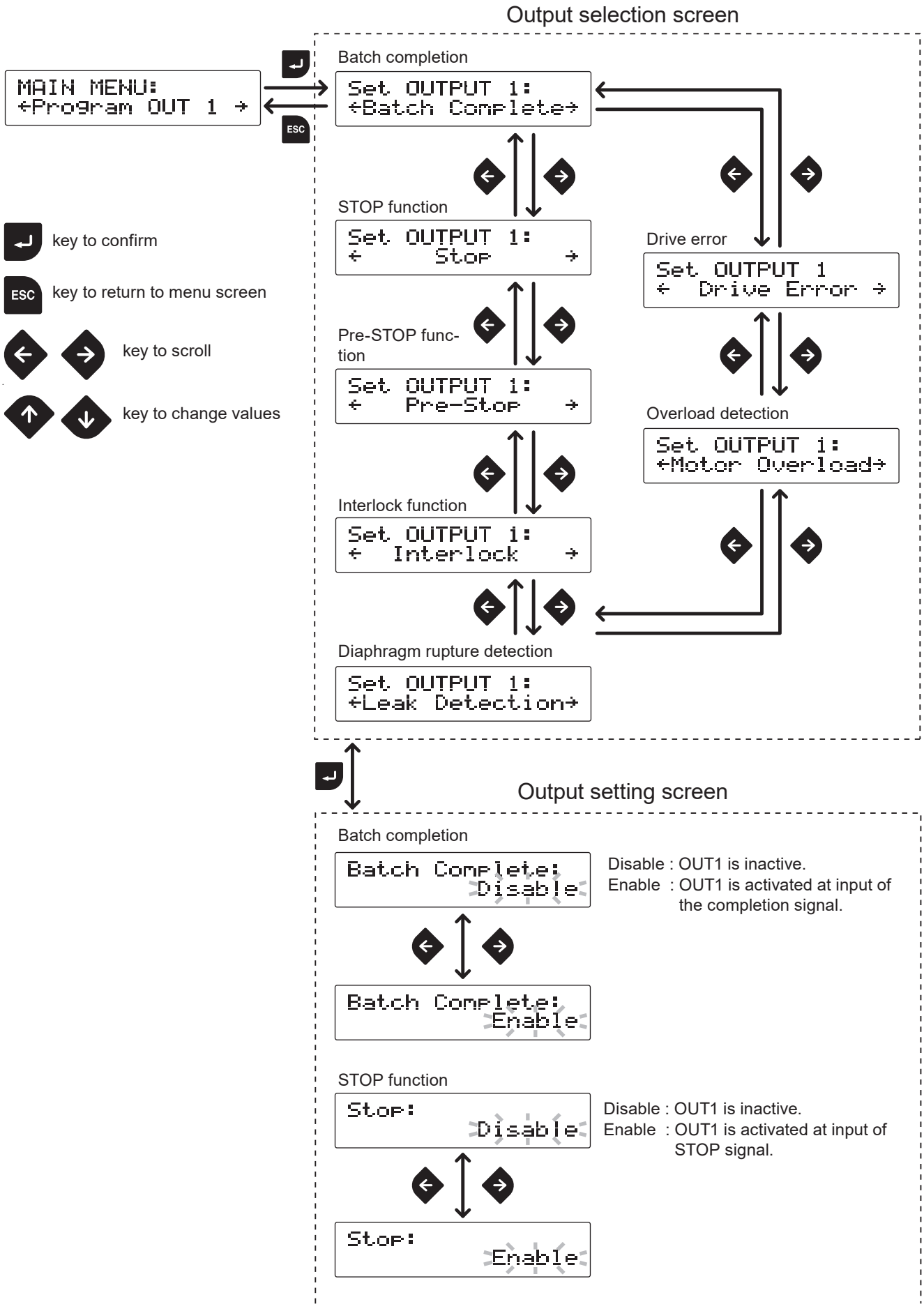


<To next page>

Pre-STOP function

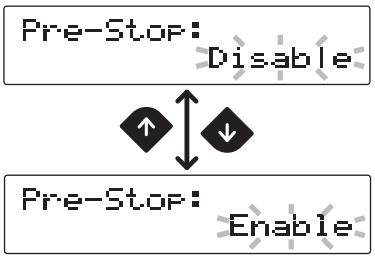


Disable : OUT1 is inactive.
Enable : OUT1 is activated at input of Pre-STOP signal.

Interlock function

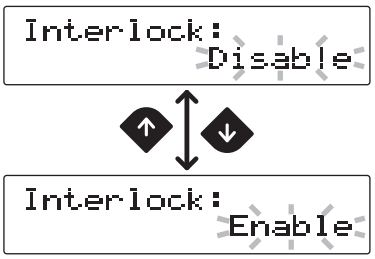


Disable : OUT1 is inactive.
Enable : OUT1 is activated at input of interlock signal.

Diaphragm rupture detection

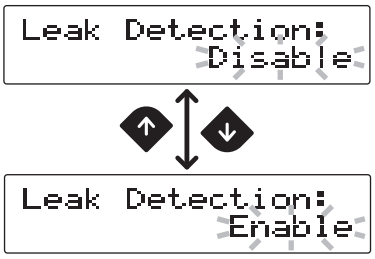


Disable : OUT1 is inactive.
Enable : OUT1 is activated at input of the detection signal.

Overload/Failed speed detection

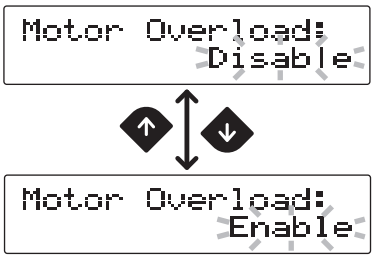


Disable : OUT1 is inactive.
Enable : OUT1 is activated at input of the detection signal.

Drive error detection

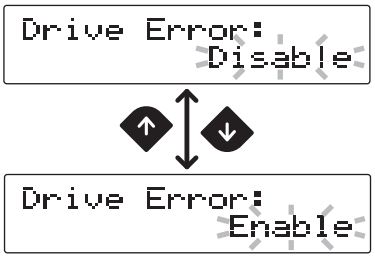


Disable : OUT1 is inactive.
Enable : OUT1 is activated at input of the detection signal.

## ■ Alarm output setting (OUT 2) <PhotoMOS relay>

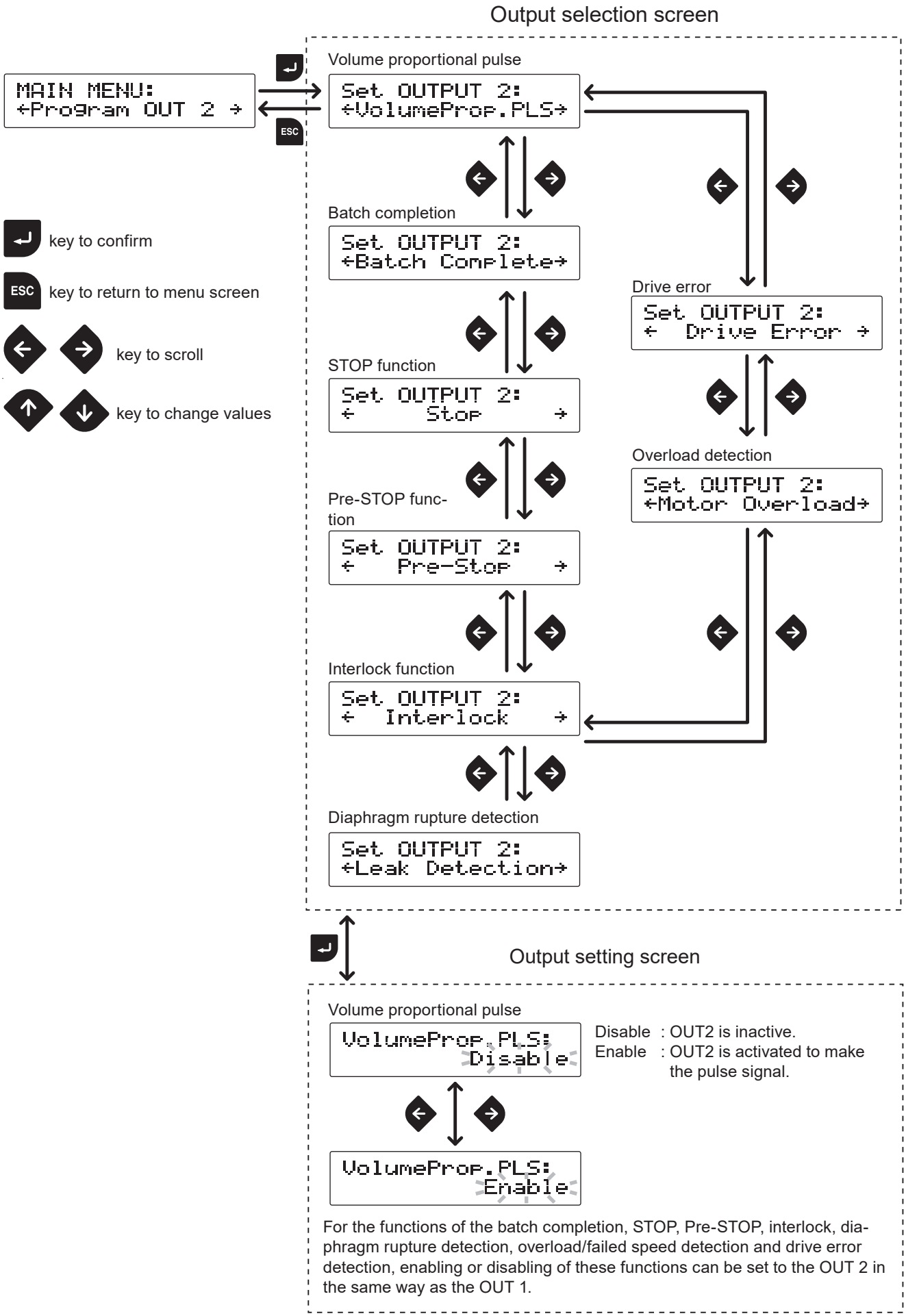

## ■ Data logging

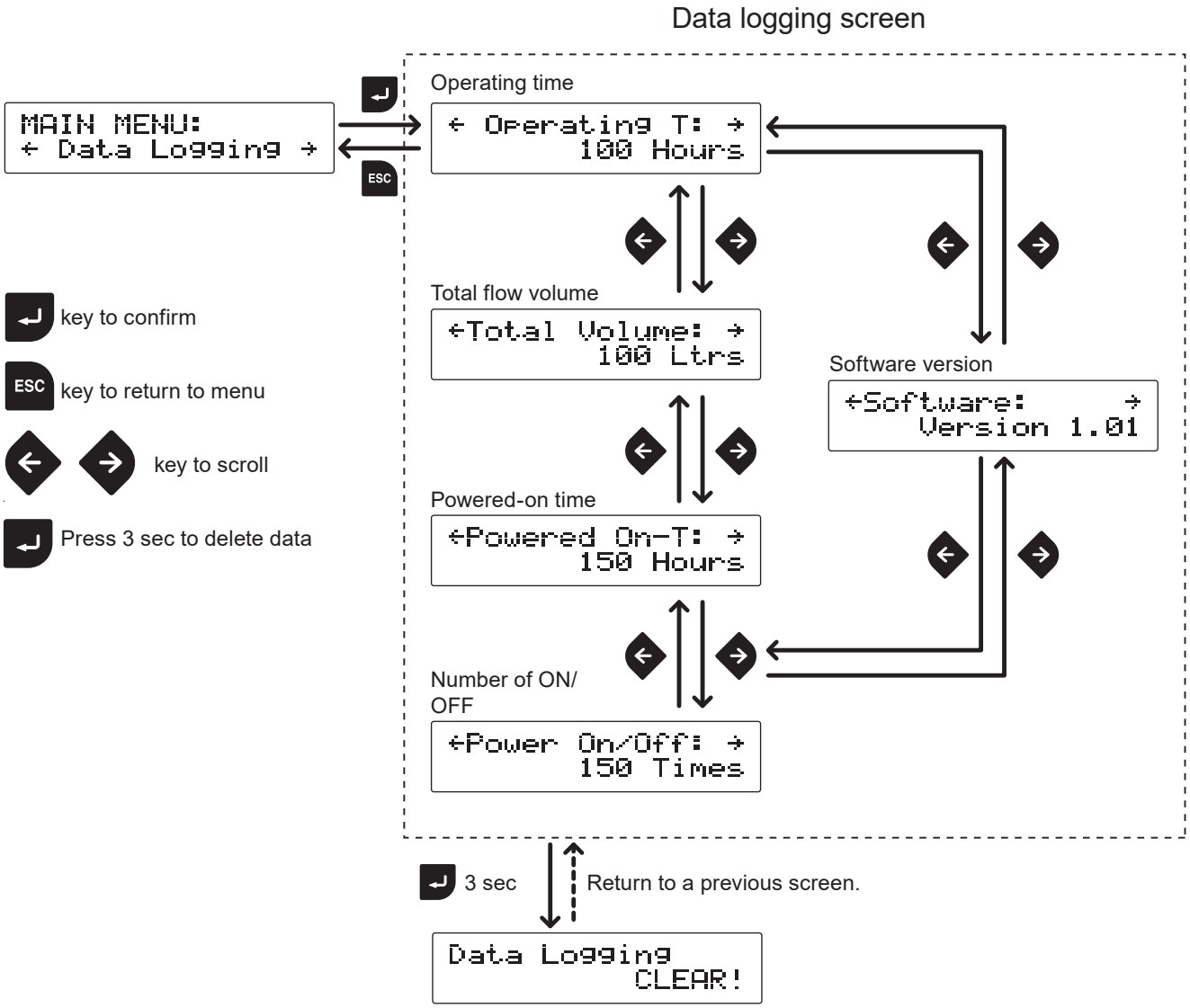


*A selected data will be cleared except the version information.

## ■ Setting of other functions

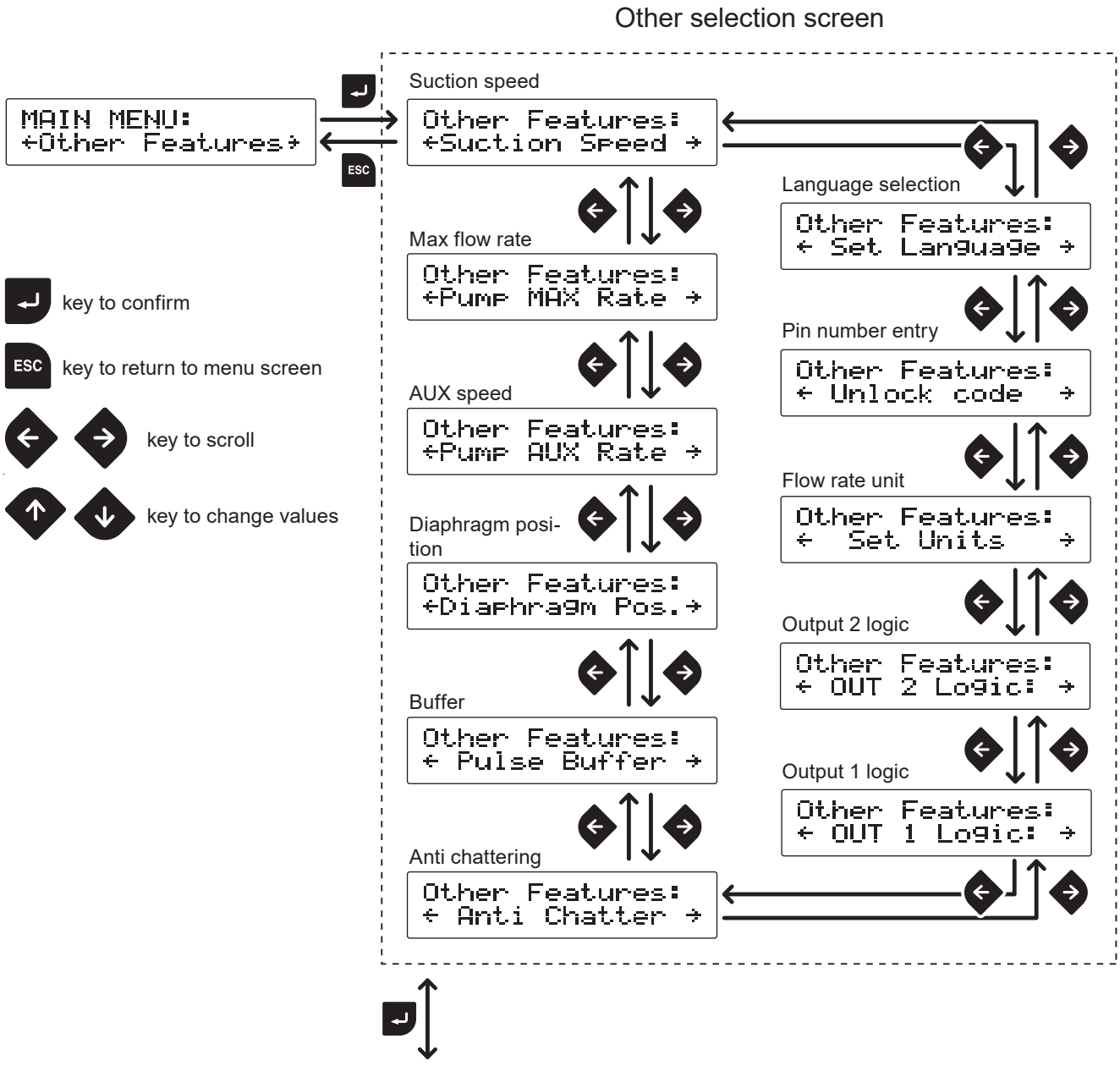


<To next page>

Operation

## Other setting screen

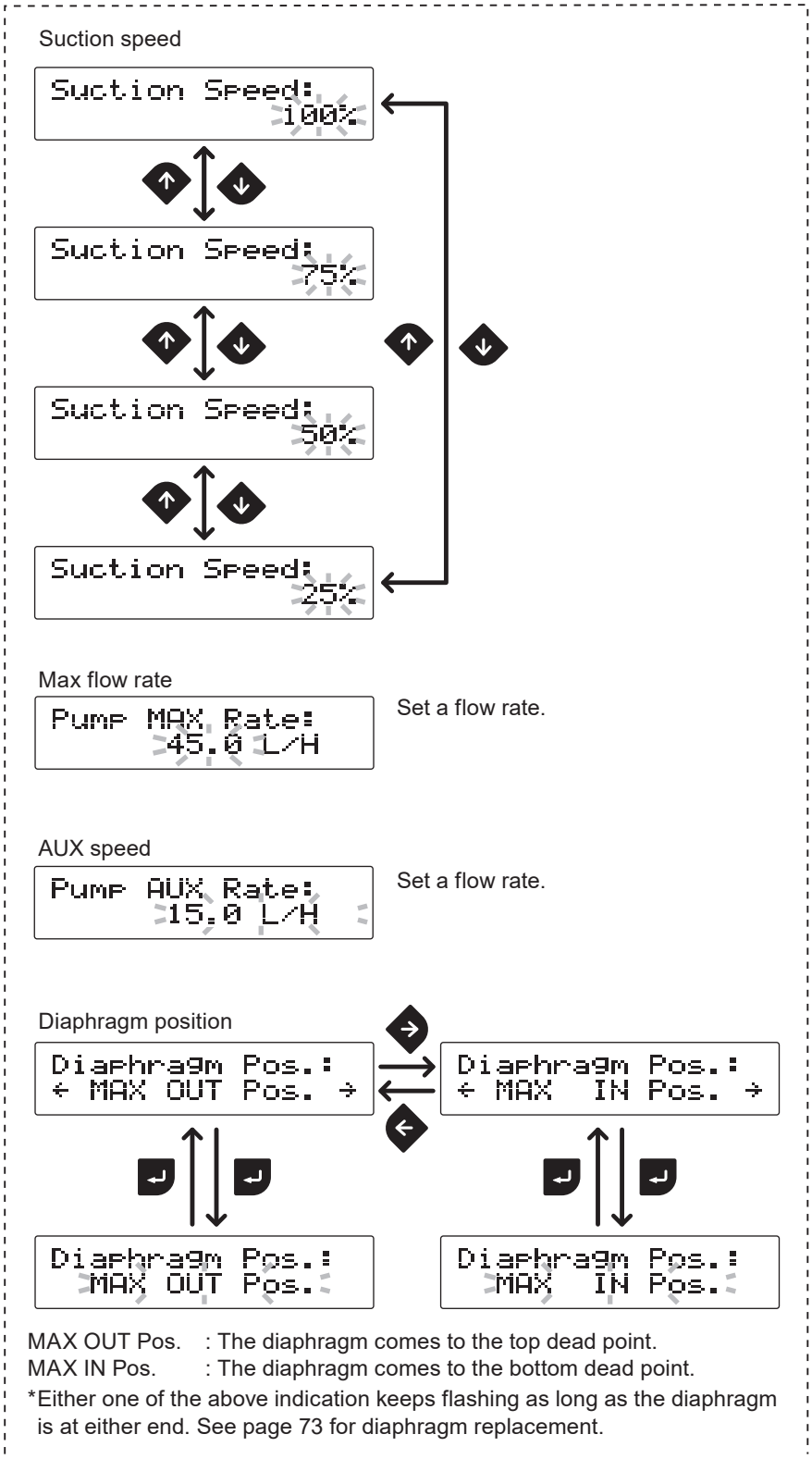


MAX OUT Pos. : The diaphragm comes to the top dead point.
MAX IN Pos. : The diaphragm comes to the bottom dead point.

*Either one of the above indication keeps flashing as long as the diaphragm is at either end. See page 73 for diaphragm replacement.

<To next page>

Buffer

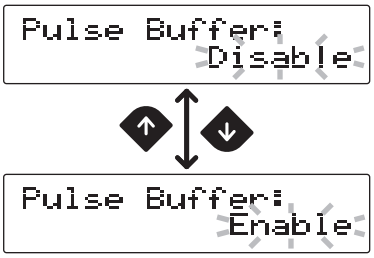


Disable : Buffer OFF
Enable : Buffer ON

Anti chattering

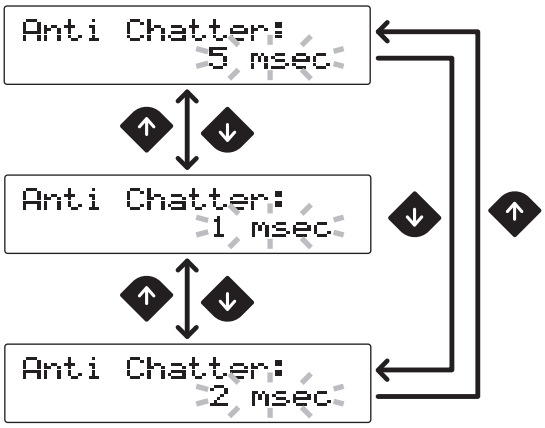


Output 1 logic

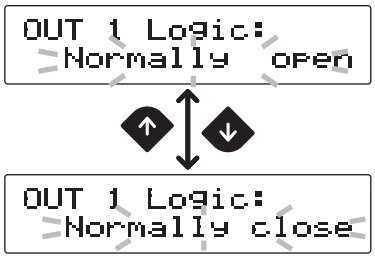


Set the output 2 logic as necessary.

Flow rate unit

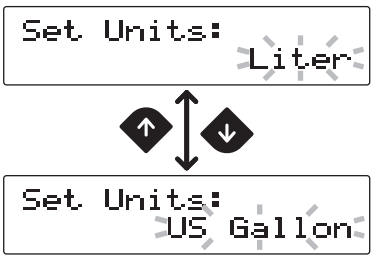


Pin number entry




key to change values
key to move through each digit
key to confirm

<To next page>

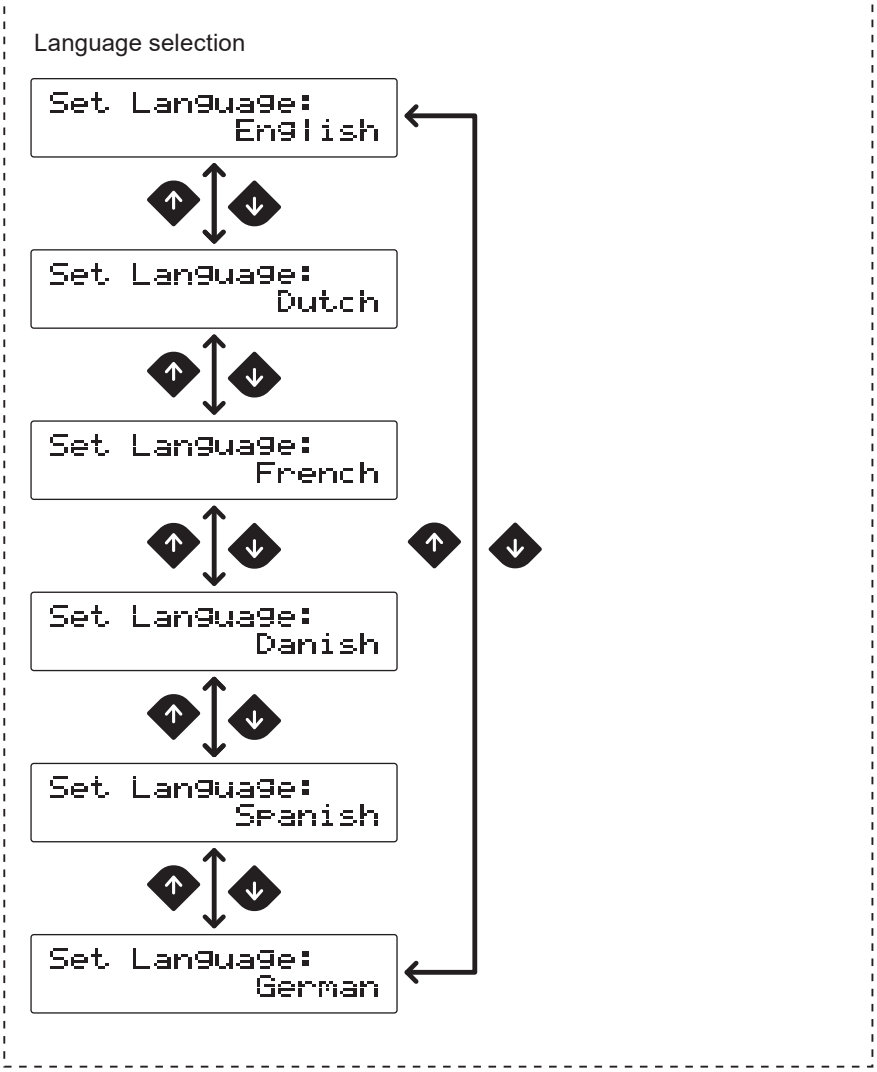
Language selection
Set Language:
English
Set Language:
Dutch
Set Language:
French
Set Language:
Danish
Set Language:
Spanish
Set Language:
German

# Operation

*Read this section before operation.*

## *Manual operation*

*Run or stop the pump by keypad operation.*

**1** Supply the rated power voltage to the pump.

The white LED bar flashes and the pump turns on.

*The pump enters the MAN/EXT selection mode when the power is turned on with the factory default setting.

**2** Push the ESC key to enter the MAN/EXT selection mode.

Push the start/stop key to stop operation and then the ESC key if the IX is running in the MAN mode.




**3** Push the left key to select the “MAN” option and the enter key for confirmation.

The pump enters a waiting state. Use the UP and DOWN keys to set the flow rate.

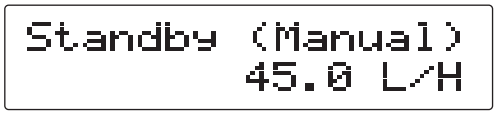


**4** Push the start/stop key to run the pump in the MAN mode.

The green LED bar lights/runs during operation.



## *EXT operation*

*The pump operation is controlled with the external signal.*

**1** Supply the rated power voltage to the pump.

The white LED bar flashed and then lights in the EXT mode.

*The pump enters the MAN/EXT selection mode when the power is turned on with the factory default setting.

**2** Push the ESC key to enter MAN/EXT selection mode.

Push the start/stop key to stop operation and the ESC key if the IX is running in the EXT mode.




**3** Push the right key to select “EXT” and the enter key for confirmation.

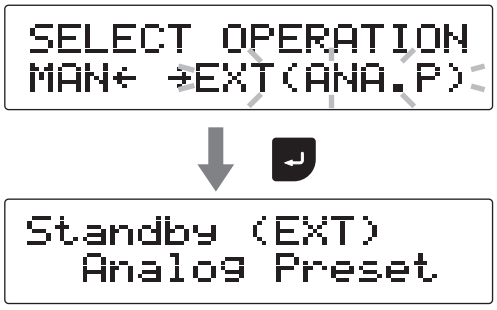


Waiting state display

*The pump enters the analog preset, analog variable, pulse, batch, interval batch, or Profibus mode.

**4** Push the start/stop key to start the EXT operation. The pump runs along with operation settings and the external signal. Pushing the same key again stops operation.

In the analog variable control mode, the current value will show up when the → key is pushed. Push the ← key to return.




The green LED lights/runs during operation.

## *AUX function*

*Operation at an AUX speed starts while receiving the external signal via the AUX terminal when the IX is running in manual mode or EXT mode. Set an AUX speed before operation. See page 59 for detail.*

## *Priming function*

*This key operation runs the pump at the preset maximum flow rate.*

**1** Press and hold both the UP and DOWN keys.

The pump runs at the preset maximum flow rate while both the keys are pressed.

*This function is available at any time when the pump is in the waiting mode or the operation mode.

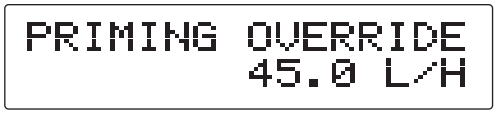


## *Keypad lock*

*Keypad lock can be active for the prevention of erroneous key operation.*

NOTE

- Any key operation is not acceptable when the keypad lock is active. In an emergency, however, pressing the start/stop key for two seconds or a longer period will stop the pump. Enter the PIN number to unlock keypads before resuming operation.
- Keypads can be locked at any time except when the menu screen is opened.

### ■ Keypad lock activation

**1** Press and hold both the right and left keys for 3 seconds.

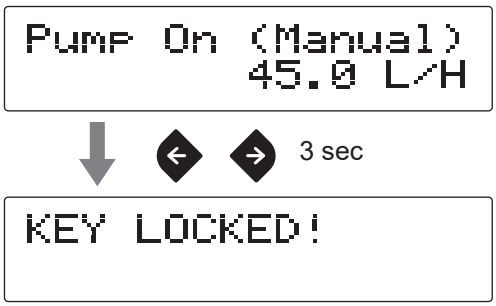


"KEY LOCKED!" appears on the screen for one second.

*This indication comes up every time any key is pushed.

## ■ Keypad lock release

**1** Push the ESC key.

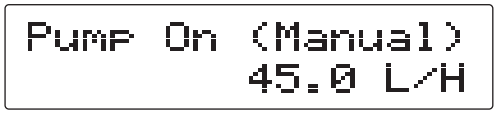


**2** Enter the PIN number.

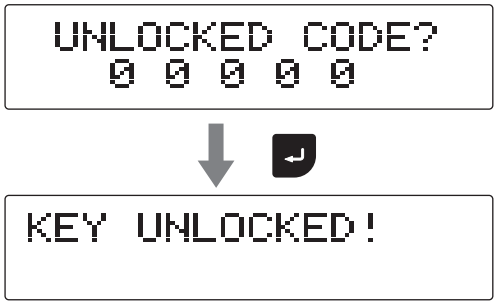


key to change value

key to move through each digit

## ■ Emergency stop

**1** Press and hold the start/stop key for 2 seconds to stop the pump.

Unlock keypads to resume operation.

# Maintenance

***This section describes troubleshooting, maintenance, wear part replacement, exploded views and specifications.***

**Points to be observed**

Observe the following points during maintenance work:

- Observe instructions in this manual for maintenance, inspection, disassembly and assembly. Do not take apart the pump beyond the extent of the instructions.
- Always wear protective clothing such as an eye protection, chemical resistant gloves, a mask and a face shield during disassembly, assembly or maintenance work. The specific solution will dictate the degree of protection. Refer to SDS precautions from the solution supplier.
- Risk of electrical shock. Be sure to turn off power to stop the pump and related devices before service is performed.

**Before unplugging the pump:**

Always stop the pump by key operation and wait for three seconds, so the pump can save the stop command for sure. If the stop command is not saved properly, the pump may unintentionally start to run when it is powered on.

NOTE

- It's not the manufacturer's responsibility for any failure due to corrosion or erosion occurred in your operating condition.
- For the need of repair, your distributor of Iwaki or the manufacturer of equipment in which our product is built.
- Be sure to drain chemicals and flush the inside of the pump before return so that a harmful chemical does not spill out in transit.

# Troubleshooting

*First check the following points. If the following measures do not help remove problems, contact your nearest distributor.*

## ■ Pump

| States | Possible causes | Solutions |
|---|---|---|
| The pump does not run (the LED bar does not light, or the screen is blank.). | Power voltage is too low. | • Observe the allowable voltage range of 90-264VAC. |
| | The pump is not powered. | • Check the pump is switched on.<br>• Correct wiring.<br>• Replace a breaking wire to new one. |
| Liquid can not be pumped up. | Air lock in the pump | • Expel air. See page 42. |
| | Entrained air from a suction line connection | • Fix the connection/reroute the suction line as necessary. |
| | A missing O ring from a valve set. | • Fit the O ring to the valve set. |
| | Debris is stuck in the pump head valves. | • Disassemble, inspect and clean the valves. Replace as necessary. |
| | A valve ball is stuck on a valve seat. | • Disassemble, inspect and clean the valves. Replace as necessary. |
| | A valve seat has been pressed in the valve guide. | • Do not push the valve seat into the valve guide. See page 72. |
| A flow rate fluctuates. | Air trapped in the pump head. | • Expel air. See page 42. |
| | Overfeeding occurs. | • Mount a back pressure valve to keep the discharge line pressure constant. |
| | Debris is stuck in the pump head valves. | • Disassemble, inspect and clean the valves. Replace as necessary. |
| | The diaphragm unit is broken. | • Replace the diaphragm set. See page 73. |
| | Pressure fluctuates at the injection point. | • Maintain the pressure constant by optimizing piping or by relocating the injection point. |
| Liquid leaks. | The nut is loose. | • Tighten the nut to fix the fitting. |
| | Loose fit of the pump head | • Retighten the pump head. See page 41. |
| | An O ring is not fitted to a valve set. | • Fit O ring to the valve set. See page 72. |
| | The diaphragm unit is broken.<br>A leak from the drain port (vent hole) | • Replace the diaphragm set. See page 73. |

# Error messages

*Take measures below when any of the error messages appears during operation. Contact us or your nearest distributor as necessary.*

| Error messages | Possible causes | Measures |
|---|---|---|
| MOTOR OVERLOAD!<br>S/S Key = Clear<br>⇕ shows up in turn<br>CHECK PLUMBING<br>BEFORE CLEARING! | The pressure overload protection is active. | • Check a discharge line for clogging and remove it as necessary. If this error happens during the transfer of high viscosity liquid, make a discharge line I.D. wider and its length shorter. |
| LEAK DETECTED!<br>S/S Key = Clear | The diaphragm unit is broken. | • Replace the broken diaphragm set with the new one. See page 73 for detail. |
| DRIVE ERROR!<br>S/S Key = Clear | Rotation control is failed. | • If this error state is removed by pushing the start/stop key, a possible cause is an instantaneous surge of discharge line pressure. Inspect/solve the problem and then restart.<br>• If not, the failure of a motor rotation detector is possible. Contact us or your nearest distributor. |

# Inspection

*Perform daily and periodic inspection to keep the best pump performance and safety.*

## *Daily inspection*

*Check the following points. If you notice any abnormal or dangerous conditions, suspend operation immediately and inspect/solve problems. See the "Troubleshooting" section as necessary.*
*When wear parts come to the life limit, replace them with new ones. Contact us or your distributor for detail.*

| No. | States | Points to be checked | How to check |
|---|---|---|---|
| 1 | Pumping | • If liquid is pumped. | Flow meter, pressure gauge or visual inspection |
| | | • If discharge pressure is normal. | Pressure gauge |
| | | • If liquid is deteriorated, crystallized or settled. | Visual or audio inspection |
| 2 | Noise and vibration | • If abnormal noise or vibration occurs. They are signs of abnormal operation. | Visual or audio inspection |
| 3 | Entrained air from the pump head joints and the suction line | • If pumped liquid includes air bubbles, check the line for leakage and loose connection and retighten as necessary. | Visual or audio inspection |

## *Periodic inspection*

*Retighten the pump head mounting bolts evenly to the following torque in diagonal order.*
*Mounting bolts may loosen in operation. How fast the bolts start to loosen is depending on operating conditions.

**Tightening torque**

| Model code | Torque | Bolts | Number of bolts |
|---|---|---|---|
| IX-B007/-B015/-B030/-B045 | 3 N•m | M5 hexagon head bolt | 4 |

# Wear part replacement

*To run the pump for a long period, wear parts need to be replaced periodically.*
*It is recommended that the following parts are always stocked for immediate replacement. Contact your nearest distributor for detail.*

**Precautions**

- Solution in the discharge line may be under pressure. Release the pressure from the discharge line before disconnecting plumbing or disassembly of the pump to avoid solution spray.
- Rinse wet ends thoroughly with tap water.
- Every time the pump head is disassembled, replace the diaphragm and the valve sets with new ones.

## *Wear part list*

| Pump head | Parts | | # of parts | Estimated life |
|---|---|---|---|---|
| B007/B015 | Valve set TC type | 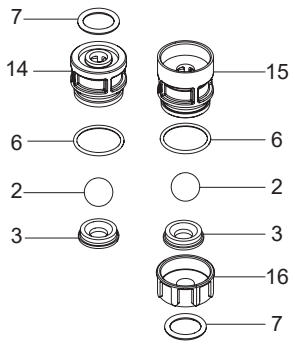 | 2 sets (inlet/outlet) | 8000 hours or 1 year* |
| | Valve set TE type | 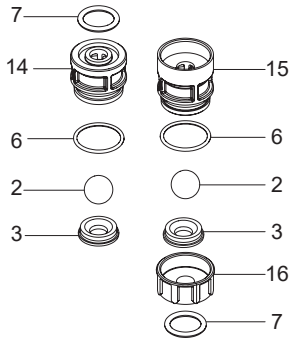 | 2 sets (inlet/outlet) | 8000 hours or 1 year* |
| | Valve set S6 type | 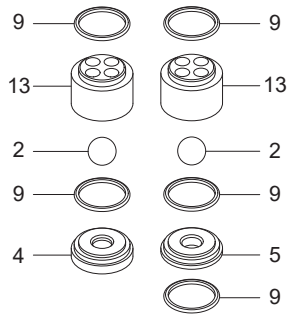 | 2 sets (inlet/outlet) | 8000 hours or 1 year* |

*One year or six months from after start of use.
*Wear part duration varies with the pressure, temperature and characteristics of liquid.
*The estimated life is calculated based on pumping clean water at ambient temperature.

| Pump head | Parts | | # of parts | Estimated life |
|---|---|---|---|---|
| B007/B015 | Diaphragm set | 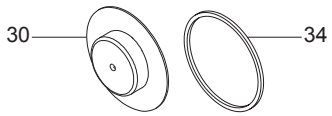 | 1 sets | 4000 hours or 6 months* |
| B030/045 | Valve set TC type | 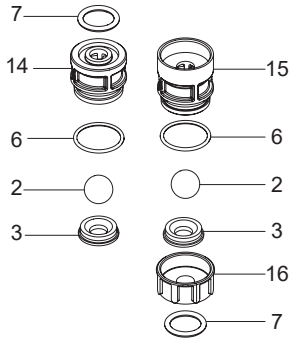 | 2 sets (inlet/outlet) | 8000 hours or 1 year* |
| | Valve set TE type | 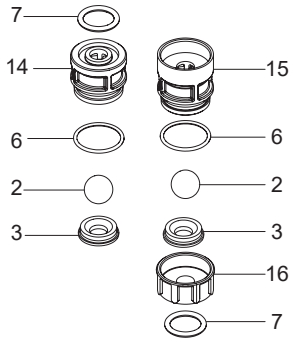 | 2 sets (inlet/outlet) | 8000 hours or 1 year* |
| | Valve set S6 type | 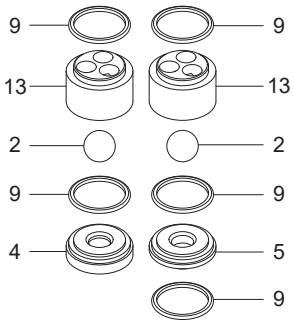 | 2 sets (inlet/outlet) | 8000 hours or 1 year* |
| | Diaphragm set | 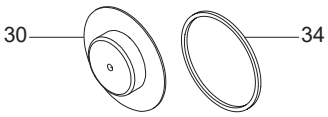 | 1 set | 4000 hours or 6 months* |

*One year or six months from after start of use.
*Wear part duration varies with the pressure, temperature and characteristics of liquid.
*The estimated life is calculated based on pumping clean water at ambient temperature.

## *Before replacement*

**1** Stop the pump operation.

**2** Close the suction line.

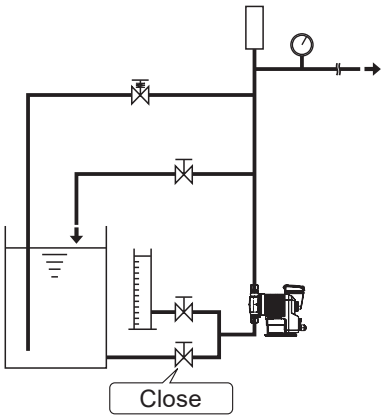


**3** Open the drain valve to release liquid out of the discharge line.

NOTE

Open the valve gradually. Solution flows out fast if solution in the discharge line is under pressure.

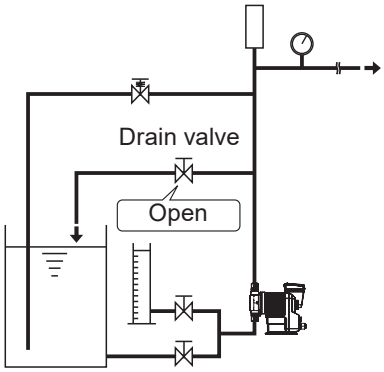


## *Valve set replacement*

**1** Remove pipes from the pump.

NOTE

- Be careful not to get wet with residual chemicals in piping.
- Rinse chemicals or crystals off the parts as necessary.
- Use care handling the valve set. Do not drop it especially when the suction pipe is removed from the pump inlet.
- For the pumps with the TC/TE wet end code, remove the nuts while holding the adapter with a spanner.

***IX-B TC/TE***

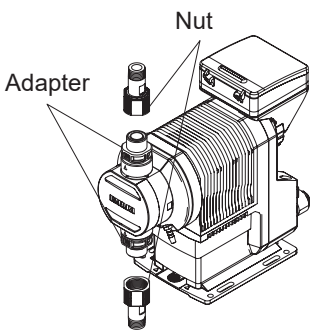

**2** Take out valve sets from the pump head and take them apart to replace worn parts as necessary.

Clean the pump head as necessary.

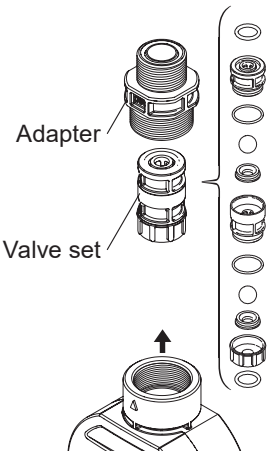


**3** Reassemble and remount the valve sets in the pump head.

Observe the mounting order and direction of valve set components. See the exploded view as well.

NOTE

- Observe the mounting direction of the valve set.
- For the pumps with the TC/TE wet end code. Do not push the valve seat down into the valve guide. A leak may result.

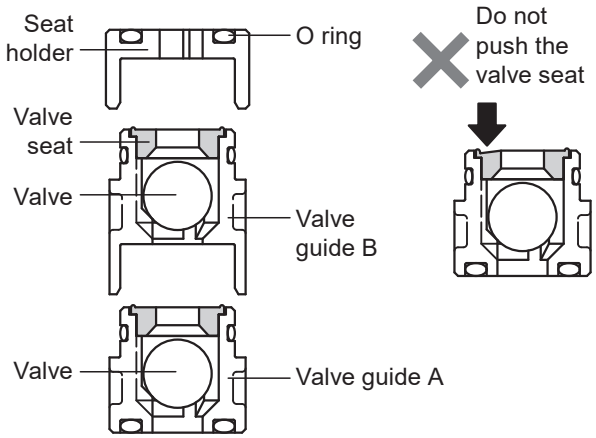


**4** Connect pipes and the pump.

For the pumps with the TC/TE wet end code, tighten the plastic “adapter” by 5N•m. Do not use excessive force or it may break.

## *Diaphragm set replacement*

**Necessary tools**

- 4mm hexagon wrench
- Torque wrench

**1** Remove pipes from the pump.

NOTE

Be careful not to get wet with residual chemicals in the pump head or the discharge pipe.

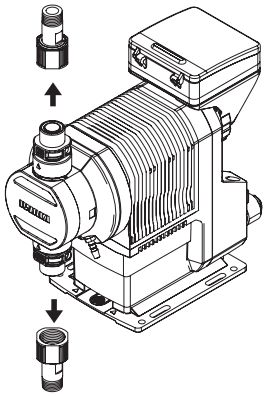

**2** Remove the bolt cover (pumps with TC/TE wet ends).

Push the clicks at the both sides and remove the bolt cover.

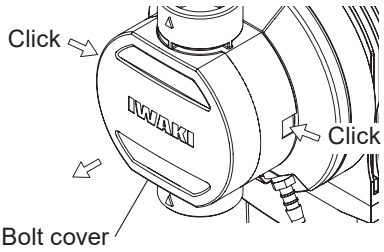


**3** Use the M5 hexagon wrench to remove the four M5 bolts and then the pump head.

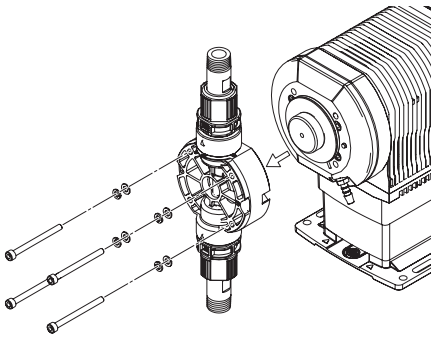

Four M5 bolts

**4** Extend the pump shaft by keypad operation.

*With the diaphragm rupture detection ON and the error message of “LEAK DETECTED!”, the diaphragm has been fully extended. In this instance, skip to the next step.




Select the “Diaphragm Pos.” option through the menu screen and push the enter key. See page 59 for detail.




Select the “MAX OUT Pos.” option with the right and left keys and push the enter key.




The diaphragm extends to the maximum and the “MAX OUT Pos.” option blinks on the screen.

**5** Rotate and remove the diaphragm unit and gasket.

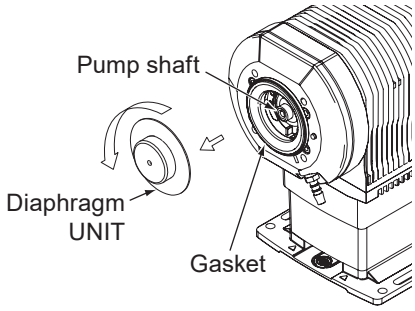


**6** Fit a new diaphragm unit and gasket.

Tighten it until bottoms out and will not turn further.

NOTE

If it is fitted loose, failure may result.

**7** Retract the pump shaft by keypad operation.

| | |
|---|---|
| Diaphragm Pos.:<br>MAX OUT Pos. | Push the enter key. |
| Other Features:<br>←Diaphragm Pos.→ | Select the “Diaphragm Pos.” option and push the enter key. |
| Diaphragm Pos.:<br>← MAX OUT Pos. → | Select the “MAX IN Pos.” option with the right and left keys. |
| Diaphragm Pos.:<br>← MAX IN Pos. → | Push the enter key. |
| Diaphragm Pos.:<br>MAX IN Pos. | The diaphragm contracts and the “MAX IN Pos.” option flashes. |

**8** Mount the pump head.

Tighten the bolts evenly to 3N•m in diagonal order.

NOTE

Check the pump shaft has contracted to the full before mounting the pump head, or a leak or damage may result.

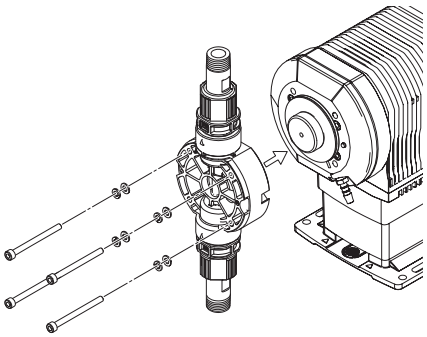

**9** Remount the bolt cover (pumps with TC/TE wet ends).

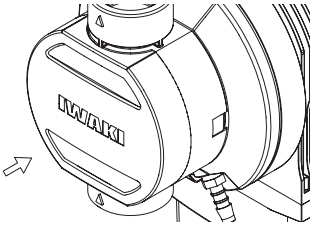

**10** Connect pipes to the fittings and then tighten the nuts.

NOTE

Make sure O rings and gaskets are fitted properly.

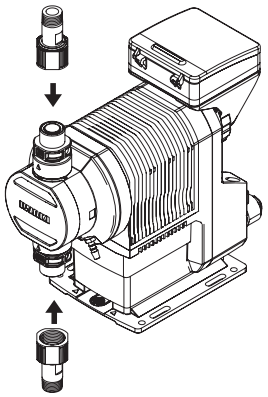

**11** Go back to the waiting state.

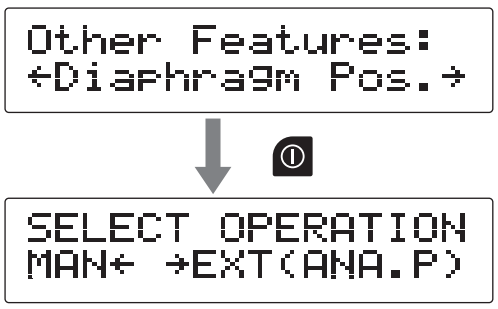


Push the enter key once to return.

Push the start/stop key to return to the MAN/EXT selection.

# Exploded view

## *Pump head, Drive unit & Control unit*

*Do not disassemble the pump beyond the extent shown in the diagram below.*

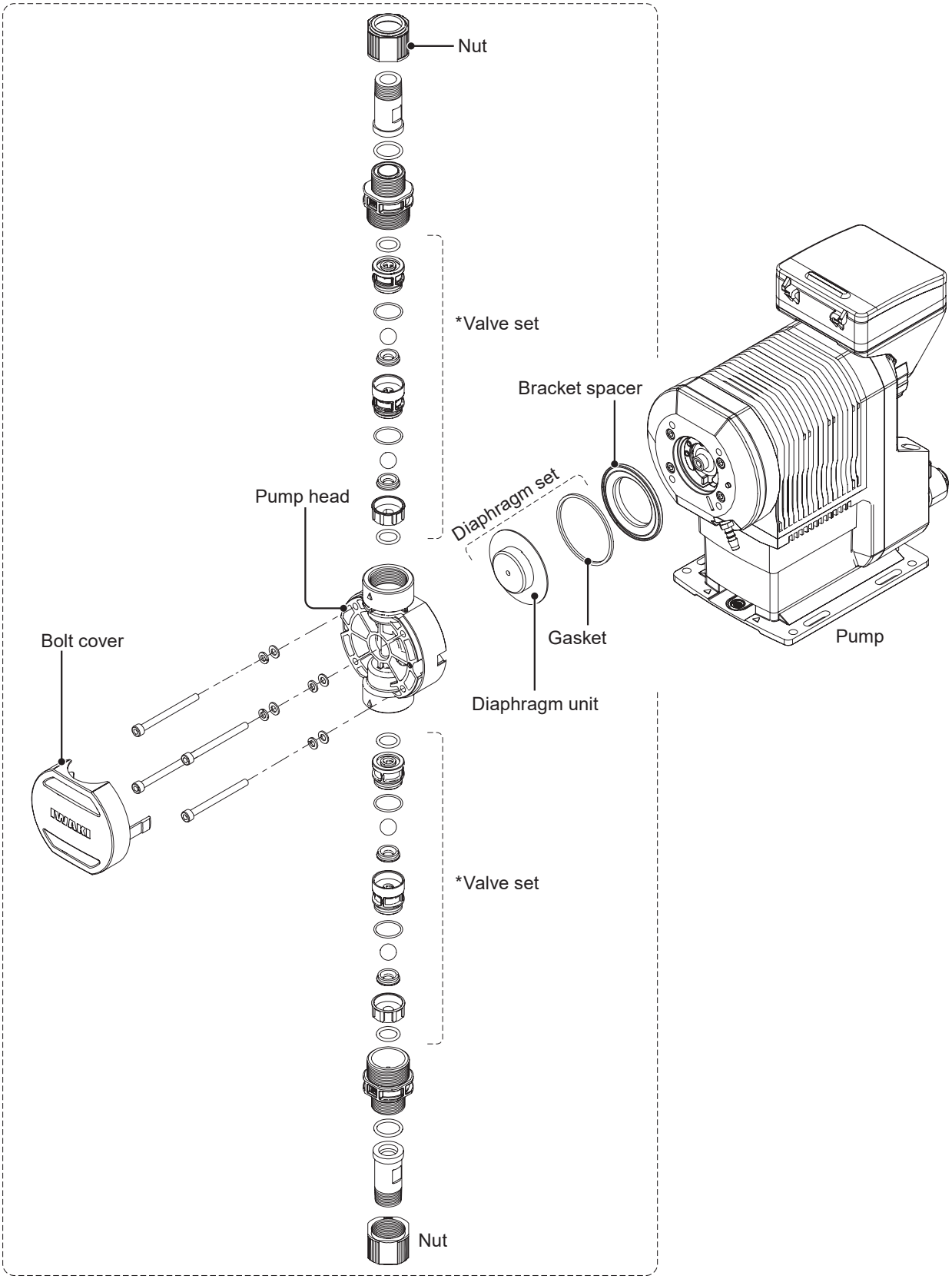


*Valve set materials differ with models.

## ■ IX-B007/-B015/-B030/-B045 TC/TE R/N

| No. | Part names | # of parts |
|---|---|---|
| 1 | Pump head | 1 |
| 2 | Valve | 4 |
| 3 | Valve seat | 4 |
| 6 | O ring | 4 |
| 7 | O ring | 4 |
| 8 | O ring | 2 |
| 14 | Valve guide A | 2 |
| 15 | Valve guide B | 2 |
| 16 | Seat holder | 2 |
| 17 | IN adapter | 1 |
| 18 | OUT adapter | 1 |
| 19 | Hex socket head bolt | 4 |
| 20 | Spring washer | 4 |
| 21 | Plain washer | 4 |
| 28 | Bolt cover | 1 |
| 30 | Diaphragm unit | 1 |
| 34 | Gasket | 1 |
| 35 | Bracket spacer | 1 |
| 50 | Nut | 2 |
| 73 | Fitting | 2 |

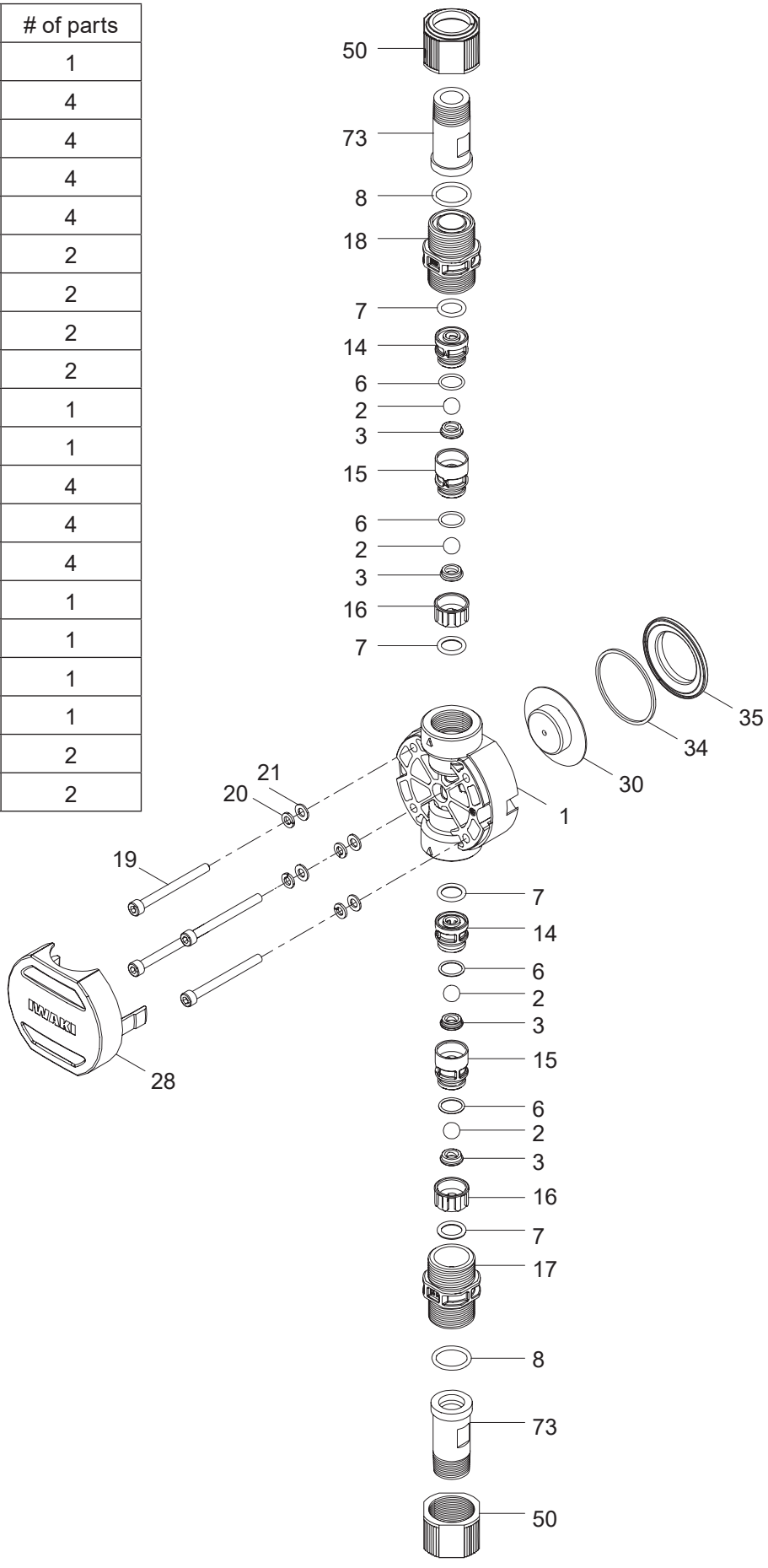

## ■ IX-B007/-B015/-B030/-B045 TC/TE G

| No. | Part names | # of parts |
|---|---|---|
| 1 | Pump head | 1 |
| 2 | Valve | 4 |
| 3 | Valve seat | 4 |
| 6 | O ring | 4 |
| 7 | O ring | 4 |
| 8 | O ring | 2 |
| 14 | Valve guide A | 2 |
| 15 | Valve guide B | 2 |
| 16 | Seat holder | 2 |
| 17 | IN adapter | 1 |
| 18 | OUT adapter | 1 |
| 19 | Hex socket head bolt | 4 |
| 20 | Spring washer | 4 |
| 21 | Plain washer | 4 |
| 28 | Bolt cover | 1 |
| 30 | Diaphragm unit | 1 |
| 34 | Gasket | 1 |
| 35 | Bracket spacer | 1 |

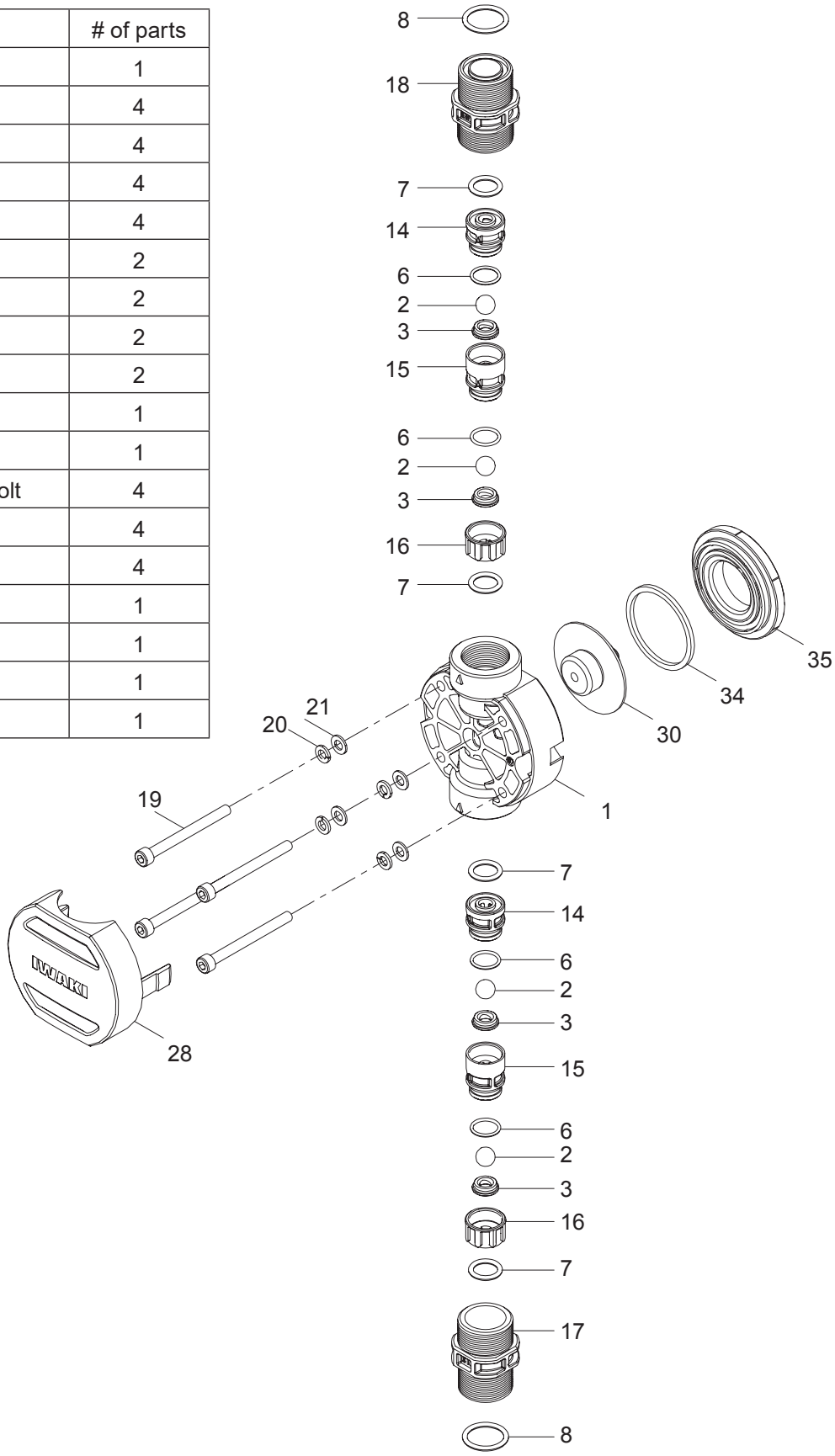

## ■ IX-B007/-B015/-B030/-B045 TC/TE F

| No. | Part names | # of parts |
|---|---|---|
| 1 | Pump head | 1 |
| 2 | Valve | 4 |
| 3 | Valve seat | 4 |
| 6 | O ring | 4 |
| 7 | O ring | 4 |
| 8 | O ring | 2 |
| 14 | Valve guide A | 2 |
| 15 | Valve guide B | 2 |
| 16 | Seat holder | 2 |
| 17 | IN adapter | 1 |
| 18 | OUT adapter | 1 |
| 19 | Hex socket head bolt | 4 |
| 20 | Spring washer | 4 |
| 21 | Plain washer | 4 |
| 28 | Bolt cover | 1 |
| 30 | Diaphragm unit | 1 |
| 34 | Gasket | 1 |
| 35 | Bracket spacer | 1 |
| 45 | Flange unit | 2 |

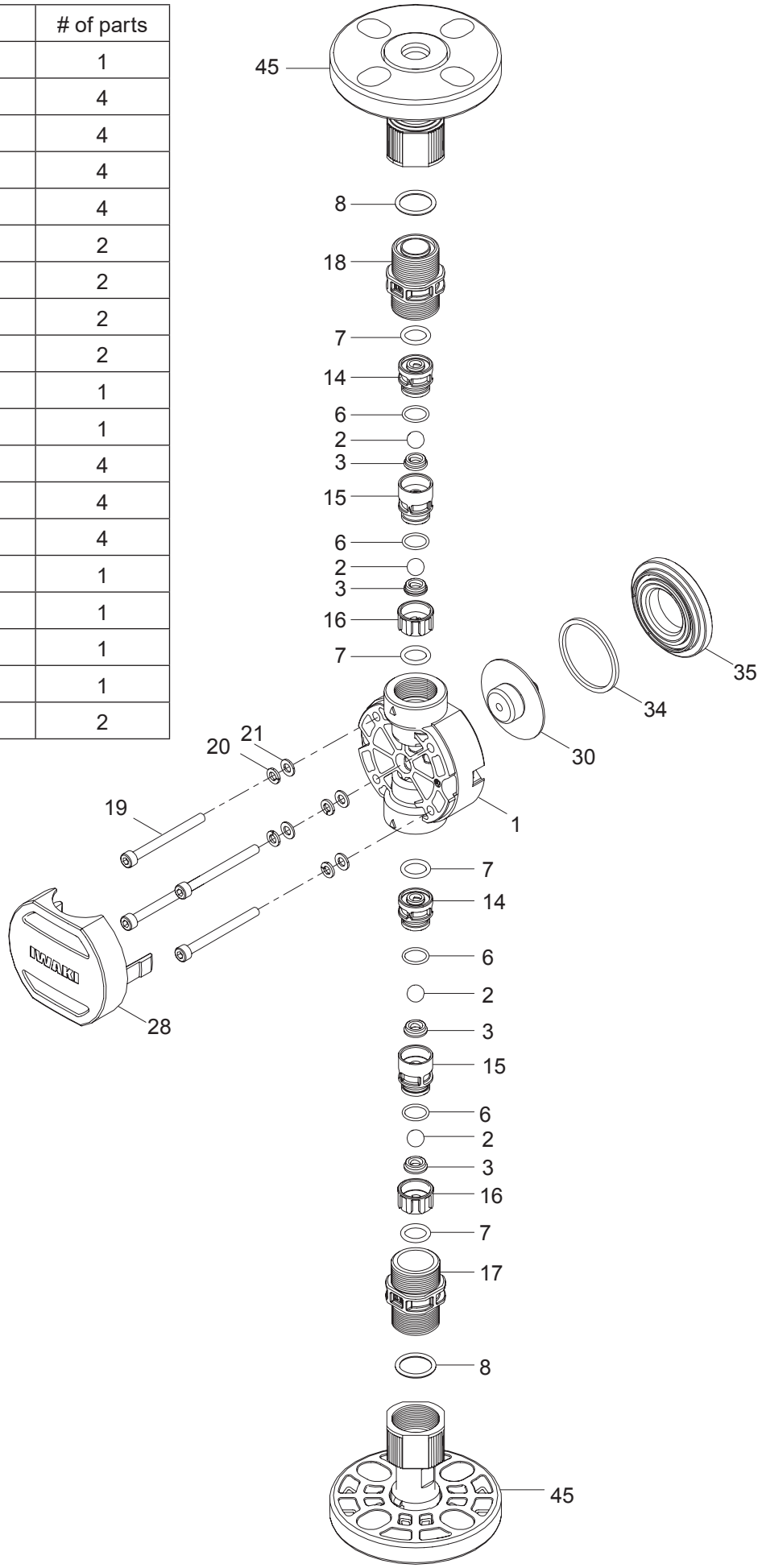

## ■ IX-B007/-B015/-B030/-B045 TC/TE T

| No. | Part names | # of parts |
|---|---|---|
| 1 | Pump head | 1 |
| 2 | Valve | 4 |
| 3 | Valve seat | 4 |
| 6 | O ring | 4 |
| 7 | O ring | 4 |
| 14 | Valve guide A | 2 |
| 15 | Valve guide B | 2 |
| 16 | Seat holder | 2 |
| 17 | IN adapter | 1 |
| 18 | OUT adapter | 1 |
| 19 | Hex socket head bolt | 4 |
| 20 | Spring washer | 4 |
| 21 | Plain washer | 4 |
| 28 | Bolt cover | 1 |
| 30 | Diaphragm unit | 1 |
| 34 | Gasket | 1 |
| 35 | Bracket spacer | 1 |
| 50 | Nut | 2 |
| 74 | Hose stopper | 2 |
| 75 | Hose adapter | 2 |
| 76 | O ring | 2 |

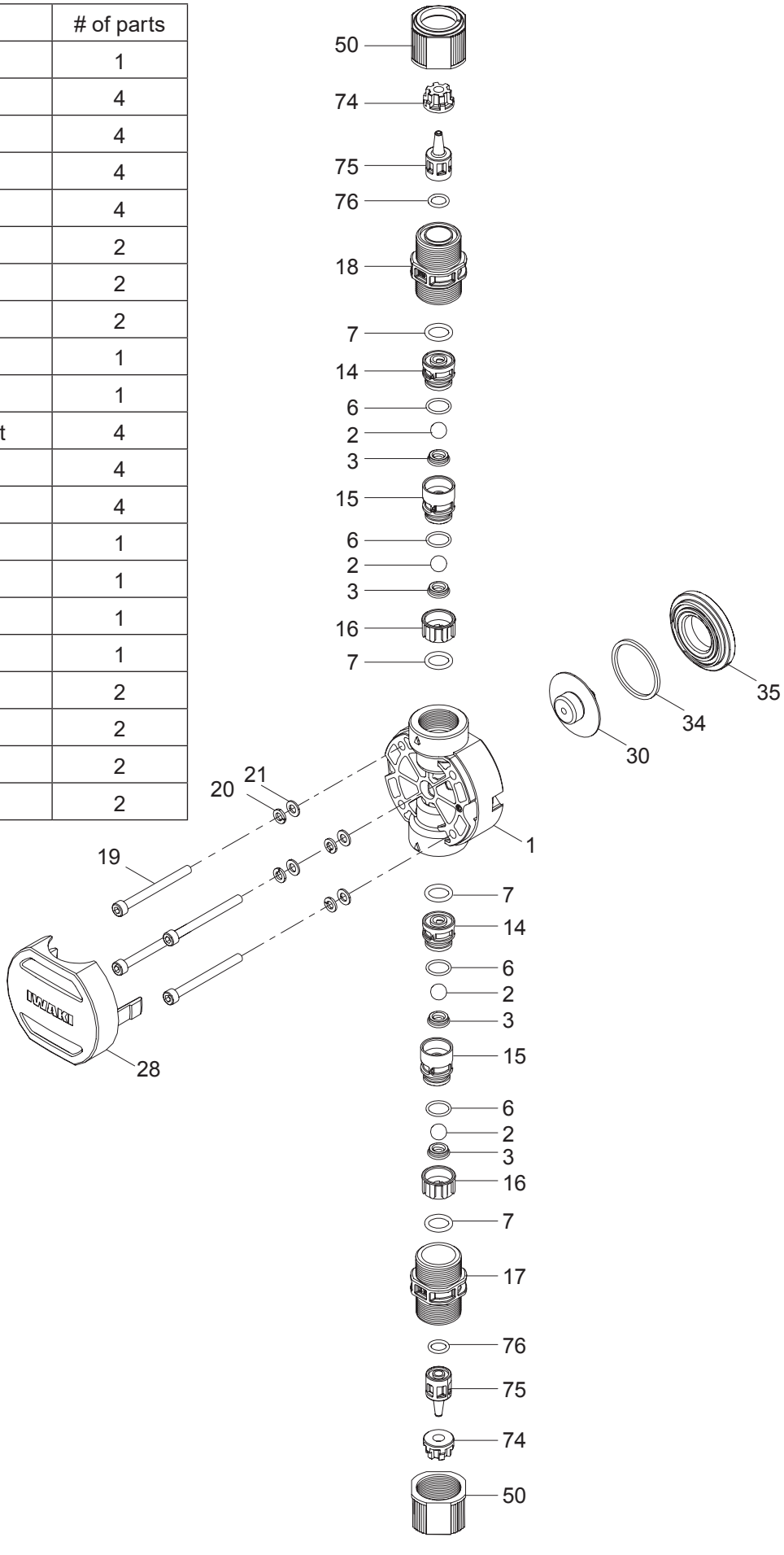

## ■ IX-B007/-B015/-B030/-B045 S6 R/N

| No. | Part names | # of parts |
|---|---|---|
| 1 | Pump head | 1 |
| 2 | Valve | 4 |
| 4 | Valve seat A | 2 |
| 5 | Valve seat B | 2 |
| 9 | Valve gasket | 10 |
| 10 | Gasket | 2 |
| 13 | Valve guide | 4 |
| 19 | Hex socket head bolt | 4 |
| 20 | Spring washer | 4 |
| 30 | Diaphragm unit | 1 |
| (31) | Retainer | 1 |
| (32) | Diaphragm sheet | 1 |
| (33) | Diaphragm stopper | 1 |
| 34 | Gasket | 1 |
| 35 | Bracket spacer | 1 |
| 50 | Nut | 2 |
| 57 | Adapter | 2 |
| 73 | Fitting | 2 |

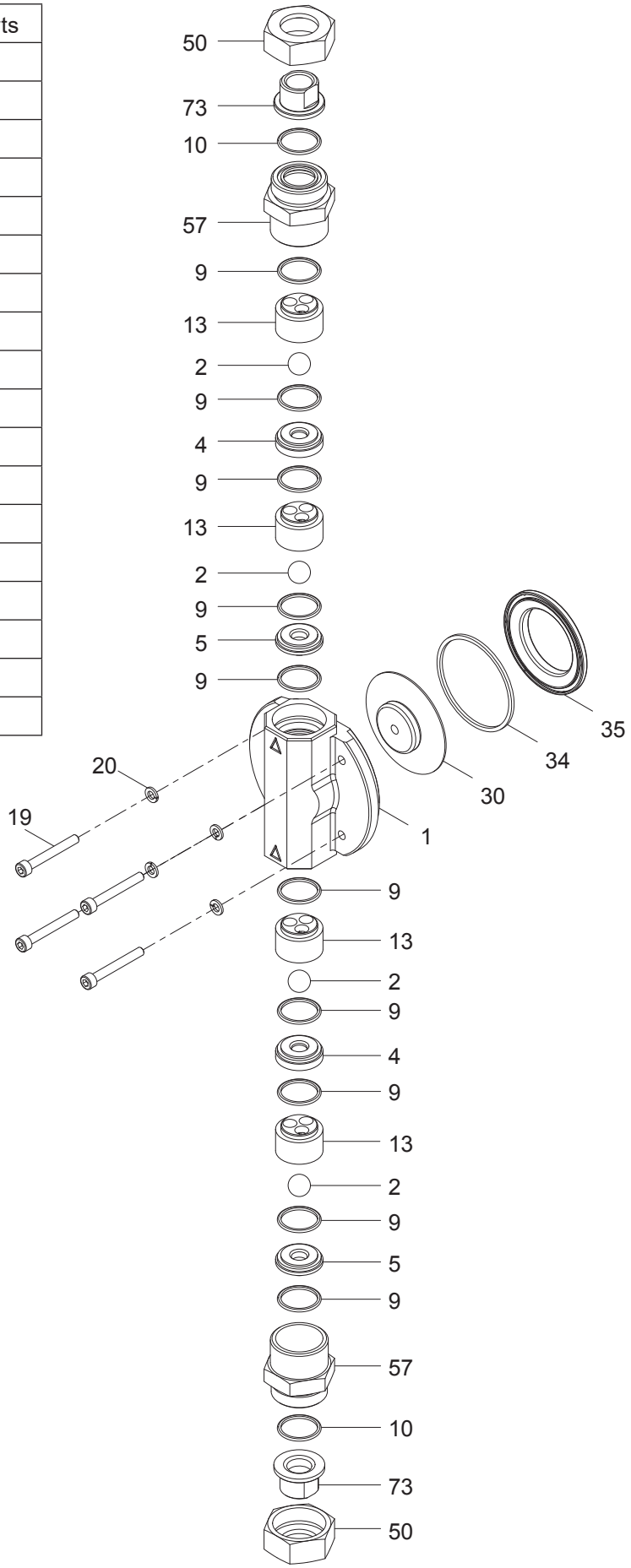

## ■ IX-B007/-B015/-B030/-B045 S6 FJ/FD/FA

| No. | Part names | # of parts |
|---|---|---|
| 1 | Pump head | 1 |
| 2 | Valve | 4 |
| 4 | Valve seat A | 2 |
| 5 | Valve seat B | 2 |
| 9 | Valve gasket | 10 |
| 10 | Gasket | 2 |
| 13 | Valve guide | 4 |
| 19 | Hex socket head bolt | 4 |
| 20 | Spring washer | 4 |
| 30 | Diaphragm unit | 1 |
| (31) | Retainer | 1 |
| (32) | Diaphragm sheet | 1 |
| (33) | Diaphragm stopper | 1 |
| 34 | Gasket | 1 |
| 35 | Bracket spacer | 1 |
| 45 | Flange unit | 2 |
| 57 | Adapter | 2 |

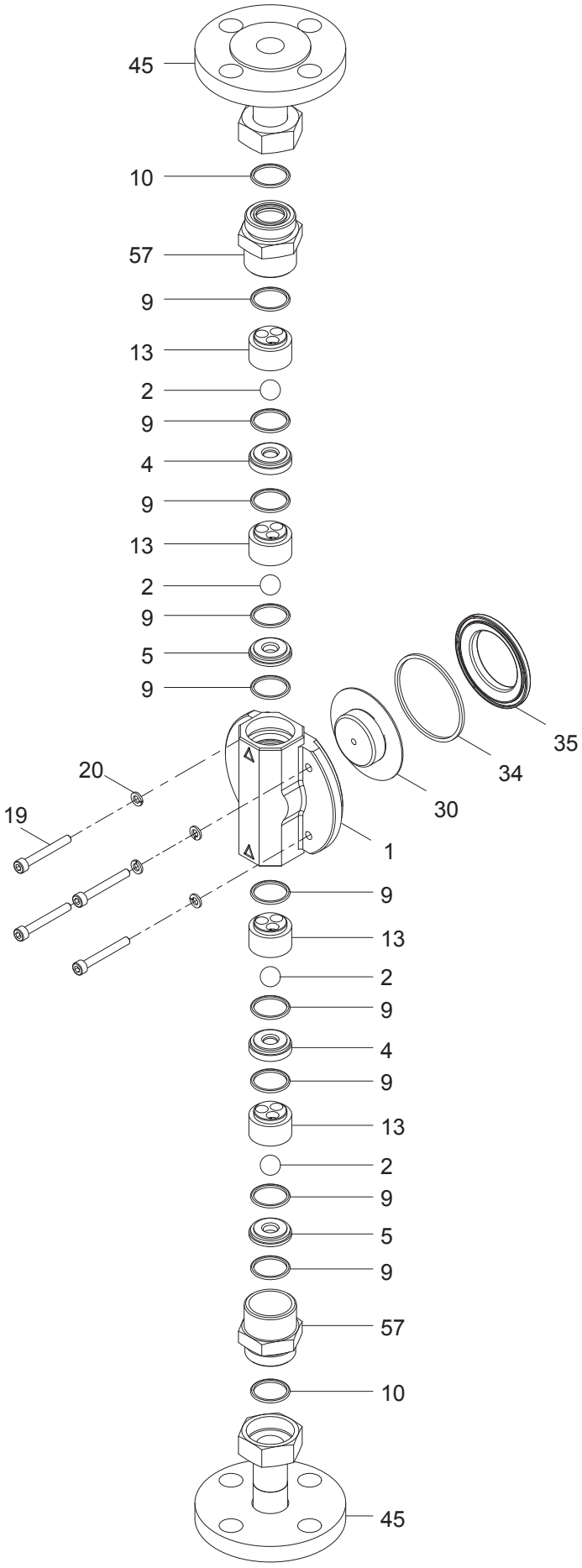

# Specifications/Outer dimensions

## *Specifications*

*Information in this section is subject to change without notice.*

### ■ Pump

| Model code | | Flow rate L/H | Max. discharge pressure MPa | Avg. power consumption W | Current value A | Connection | Weight kg |
|---|---|---|---|---|---|---|---|
| IX-B007 TC/TE | R | 0.0075 - 7.5 | 1.7 | 17 | 0.4 | R1/2 | 3.5 |
| | N | | | | | 1/2 NPT | |
| | G | | | | | G3/4 | |
| | T | | 1.7*1 | | | Tube*2 | |
| | F | | 1.0 | | | Flange*3 | 3.7 |
| IX-B007 S6 | R | 0.0075 - 7.5*4 | 1.7 | 17 | 0.4 | Rc3/8 | 4.5 |
| | N | | | | | 3/8 FNPT | |
| | FJ | | 1.0 | | | JIS 10K 15A | 6.0 |
| | FD | | | | | DIN PN10 DN15 | |
| | FA | | | | | ANSI 150 lb 1/2" | |
| IX-B015 TC/TE | R | 0.015 - 15 | 1.0 | 17 | 0.4 | R1/2 | 3.5 |
| | N | | | | | 1/2 NPT | |
| | G | | | | | G3/4 | |
| | T | | 1.0*1 | | | Tube*2 | |
| | F | | 1.0 | | | Flange*3 | 3.7 |
| IX-B015 S6 | R | 0.015 - 15*4 | 1.0 | 17 | 0.4 | Rc3/8 | 4.5 |
| | N | | | | | 3/8 FNPT | |
| | FJ | | | | | JIS 10K 15A | 6.0 |
| | FD | | | | | DIN PN10 DN15 | |
| | FA | | | | | ANSI 150 lb 1/2" | |
| IX-B030 TC/TE | R | 0.030 - 30 | 0.6 | 19 | 0.5 | R1/2 | 3.7 |
| | N | | | | | 1/2 NPT | |
| | G | | | | | G3/4 | |
| | T | | 0.6*1 | | | Tube*2 | |
| | F | | 0.6 | | | Flange*3 | 3.9 |
| IX-B030 S6 | R | 0.030 - 30*4 | 0.6 | 19 | 0.5 | Rc3/8 | 5.0 |
| | N | | | | | 3/8 FNPT | |
| | FJ | | | | | JIS 10K 15A | 6.5 |
| | FD | | | | | DIN PN10 DN15 | |
| | FA | | | | | ANSI 150 lb 1/2" | |
| IX-B045 TC/TE | R | 0.045 - 45 | 0.4 | 19 | 0.5 | R1/2 | 3.7 |
| | N | | | | | 1/2 NPT | |
| | G | | | | | G3/4 | |
| | T | | 0.4*1 | | | Tube*2 | |
| | F | | 0.4 | | | Flange*3 | 3.9 |
| IX-B045 S6 | R | 0.045 - 45*4 | 0.4 | 19 | 0.5 | Rc3/8 | 5.0 |
| | N | | | | | 3/8 FNPT | |
| | FJ | | | | | JIS 10K 15A | 6.5 |
| | FD | | | | | DIN PN10 DN15 | |
| | FA | | | | | ANSI 150 lb 1/2" | |

* The above information is based on pumping clean water at rated voltage and ambient temperature.
* Pressure overload protection will stop operation when a discharge pressure has risen 1.2 to 1.5 times higher than the maximum level.
* Allowable room temperature: 0-50°C (32-122°F)
* Allowable liquid temperature: 0-50°C (32-122°F) for the TC/TE types
  0-80°C (32-176°F) for the S6 type
* Allowable power voltage deviation: Within ±10% of the rated range
* Ambient humidity: 30-90%RH (non condensing)
* Noise level: 70dB(A) for the TC/TE types
  80dB (A) for the S6 type

*1 Rather than this value, observe the maximum allowable pressure of the tube to be used.

*2 ø4×ø6 tubes (IX-B 007/015) or ø9×ø12 tubes/ø10×ø12 tubes (IX-B 030/045) are available.

*3 The common flange for the JIS10K15A, DIN PN10 DN15, and ANSI 150lb 1/2" sizes.

*4 The recommended flow rate of the IX-B S6 type is limited to 1 to 100% range. This means that when the flow rate is set to 45L/H (100%), the IX-B045 S6 can catch up with that value and the actual flow rate can be at 45L/H . But then when the flow rate is set below 0.45L/H (1%), the pump may not be able to meet that low value and the actual flow rate can be lower than the 0.45L/H.

## ■ Control unit

| | | | |
|---|---|---|---|
| Operation modes | MAN (Manual) | | A flow rate is set with ↑ (Up) and ↓ (Down) keys. |
| | EXT | Analog preset | 4-20/0-20/20-4/20-0mA (proportional control: flow by preset current patterns) |
| | | Analog variable | 0-20mADC (proportional control: flow by user current patterns) |
| | | Pulse control*1 | 0.000625mL/PLS - 15.000000mL/PLS (B007) |
| | | | 0.001250mL/PLS - 30.000000mL/PLS (B015) |
| | | | 0.002500mL/PLS - 60.000000mL/PLS (B030) |
| | | | 0.003750mL/PLS - 90.000000mL/PLS (B045) |
| | | Batch control*1 | 0.625mL/PLS - 15.000L/PLS (B007) |
| | | | 1.250mL/PLS - 30.000L/PLS (B015) |
| | | | 2.500mL/PLS - 60.000L/PLS (B030) |
| | | | 3.750mL/PLS - 90.000L/PLS (B045) |
| | | Interval batch control*1 | 0-9day, 0-23hr, 1-59min |
| | | | 0.625mL - 15.000L/PLS (B007) |
| | | | 1.250mL - 30.000L/PLS (B015) |
| | | | 2.500mL - 60.000L/PLS (B030) |
| | | | 3.750mL - 90.000L/PLS (B045) |
| | | Profibus control | Profibus-DP, Compliant to EN50170 (IEC61158) |
| Monitors | LCD | 16×2 backlit LCD | |
| | LED bar | Lights in white colour when the pump stops. | |
| | | Lights in green colour when the pump runs. | |
| | | Lights in orange colour when the Pre-STOP signal is input. | |
| | | Lights in red colour when Alarm OUT 1 or 2 is activated. | |
| Operation | Keypads | ⏻ (Start/Stop), MENU, ESC, ↵ (Enter), ↑ (Up), ↓ (Down), ← (Left) and → (Right) keys | |
| Control functions | STOP | | Pump OFF at contact input*2 |
| | PRIME | | Max spm operation while the UP and DOWN keys are pressed. |
| | Keypad lock | | PIN number entry disables the function. |
| | Interlock | | Pump OFF at contact input*2 |
| | AUX | | Pump ON at AUX speed at contact input |
| | Maximum flow rate setting | | The max flow rate can be set at each control mode. |
| | Buffer | | Accumulates the entered external pulse signal with buffer ON. |
| | Current value indication | | An input current is displayed during operation in the ANA.V mode. |
| Input | Stop/ Pre-STOP | | No-voltage contact or open collector*3 |
| | AUX | | No-voltage contact or open collector*3 |
| | Interlock | | No-voltage contact or open collector*3 |
| | Analog | | 0-20mADC (internal resistance is 200Ω.) |
| | Pulse | | No-voltage contact/open collector (max 100Hz, min ON time: 5msec) |
| Output | Alarm (OUT 1) | | No voltage contact (mechanical relay) 250VAC 3A (resistive load)<br>Enable or disable the Batch Complete*4, STOP, Pre-STOP, Interlock, Leak Detection (default: ON) and Motor Overload (/Drive Error). |
| | Alarm (OUT 2) | | No voltage contact (PhotoMOS relay) 24VAC/DC 0.1A (resistive load)<br>Enable or disable the Volume Prop. PLS*5, Batch Complete*4, STOP, Pre-STOP, Interlock (default: ON), Leak Detection and Motor Overload (/Drive Error). |
| | Power supply | | 12VDC 30mA or below |
| | Analog | | User current patterns of 0-20mADC (allowable load resistance: 300Ω) |
| Power voltage*6 | | | 100-240VAC 50/60Hz |

*1 For these control modes, the calibrated flow volume per shot is applied to the minimum settable flow volume per shot.

*2 The setting can be changed to “pump ON at contact input”.

*3 The maximum applied voltage from the IX to an external contact is 12V at 5mA. When using a mechanical relay, its minimum application load should be 5mA or below.

*4 If the “Batch Complete” output is set to enabled, other output functions turn disabled.

*5 If the “Volume Prop. PLS” output is set to enabled, other output functions turn disabled.

*6 Observe the specified power voltage range or failure may result. The allowable power voltage range is 90-264VAC.

*7 An Iwaki Profibus converter is needed to establish the Profibus control. Purchase separately.

## ■ Power cable

| | |
|---|---|
| Conduction section area | 0.75 [$mm^2$] Triplex cable (L/N/PE) |
| Length | 1950 [mm] |
| Standard | H03VV-F |
| Terminal treatment | European plug |

## ■ Body colour

| | |
|---|---|
| Blue | Munsell colour system 7.5PB 3/8 |

## *Outer dimensions*

### ■ IX-B007/-B015/-B030/-B045 TC/TE R/N

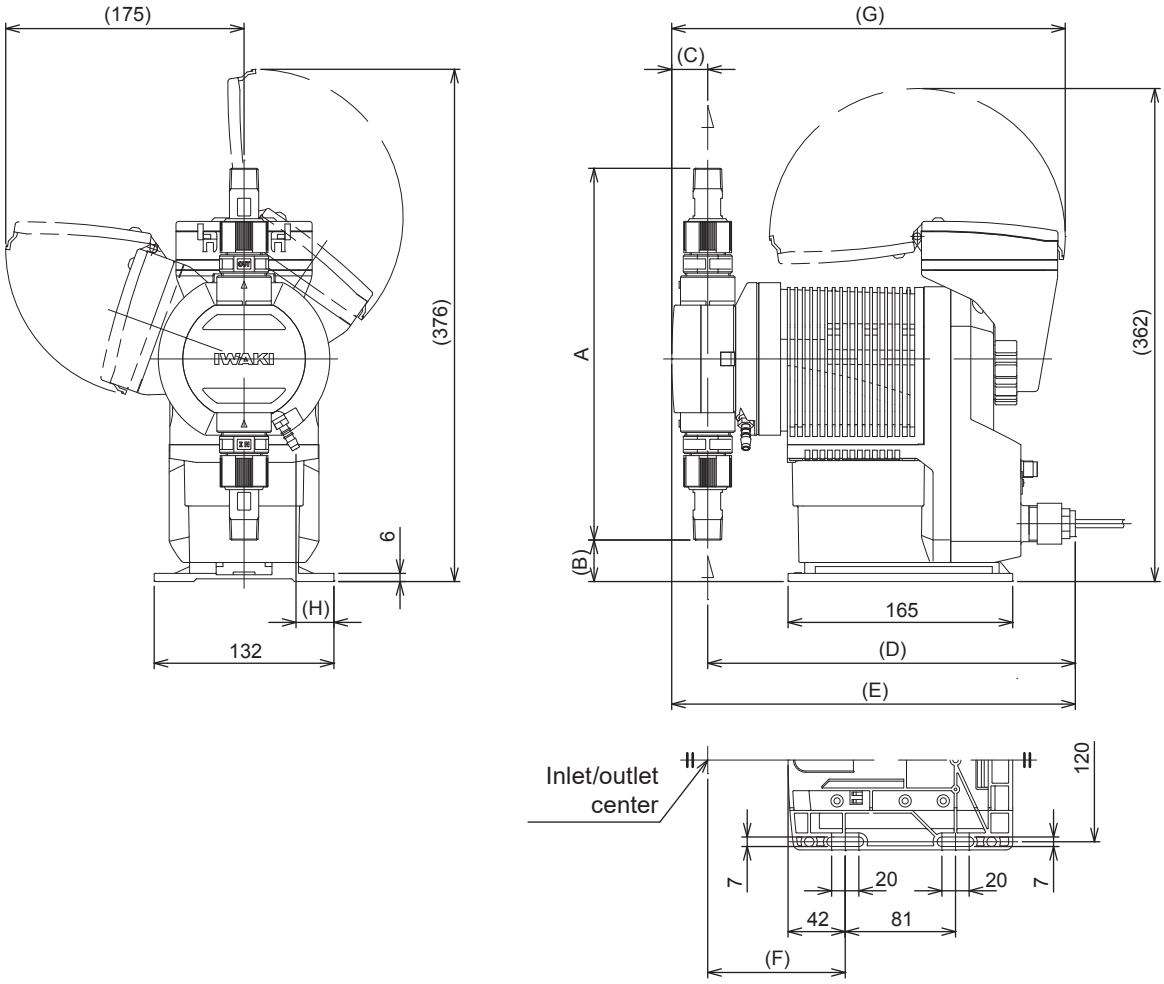


| | A | B | C | D | E | F | G | H |
|---|---|---|---|---|---|---|---|---|
| IX-B007 | 240 | 45 | 24.3 | 267 | 291 | 98 | 284 | 29 |
| IX-B015 | 249 | 41 | 24.3 | 267 | 291 | 98 | 284 | 29 |
| IX-B030/-B045 | 273 | 30 | 26.4 | 270 | 296 | 101 | 289 | 28 |

## ■ IX-B007/-B015/-B030/-B045 TC/TE G

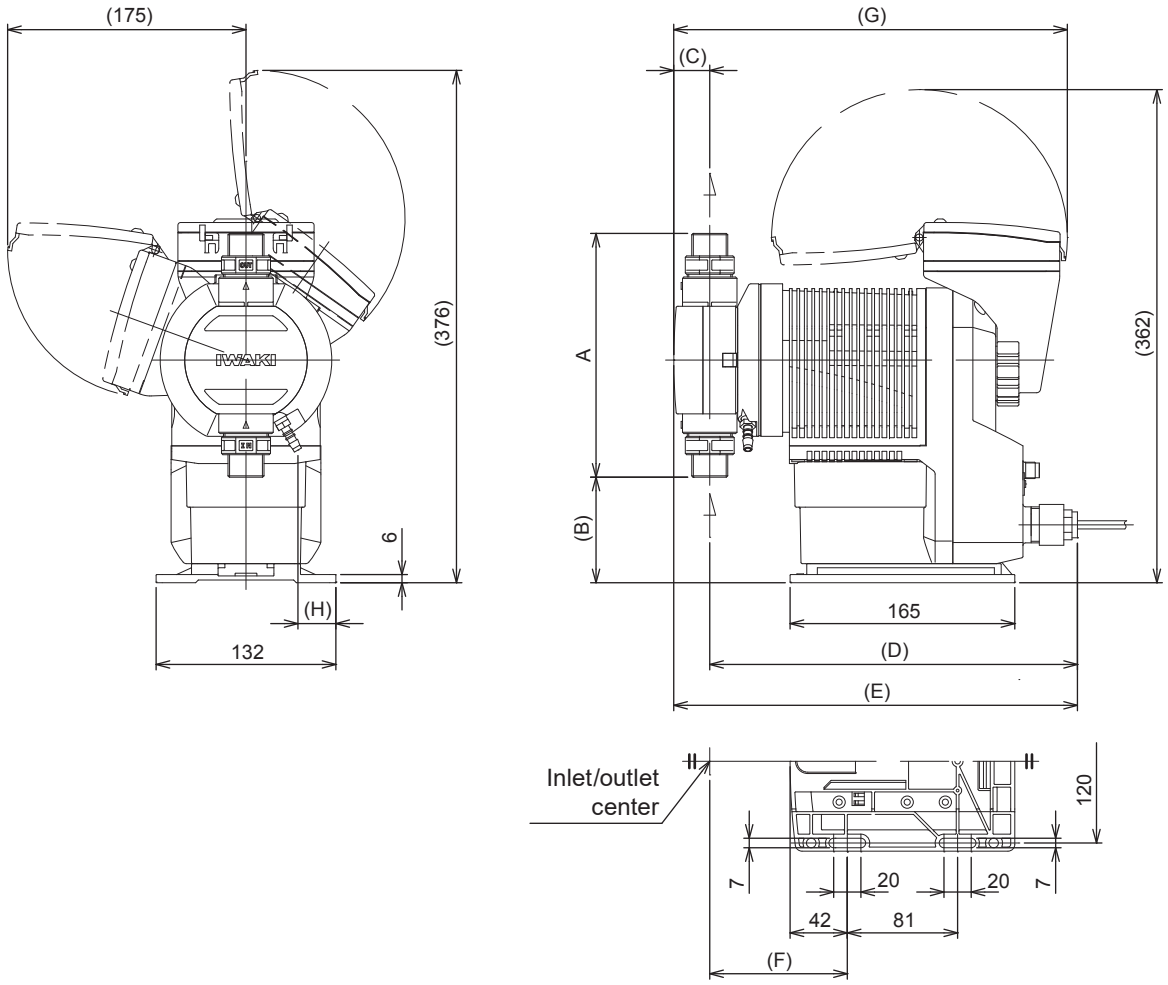


| | A | B | C | D | E | F | G | H |
|---|---|---|---|---|---|---|---|---|
| IX-B007 | 146 | 92 | 24.3 | 267 | 291 | 98 | 284 | 29 |
| IX-B015 | 155 | 88 | 24.3 | 267 | 291 | 98 | 284 | 29 |
| IX-B030/-B045 | 179 | 77 | 26.4 | 270 | 296 | 101 | 289 | 28 |

## ■ IX-B007/-B015/-B030/-B045 TC/TE F

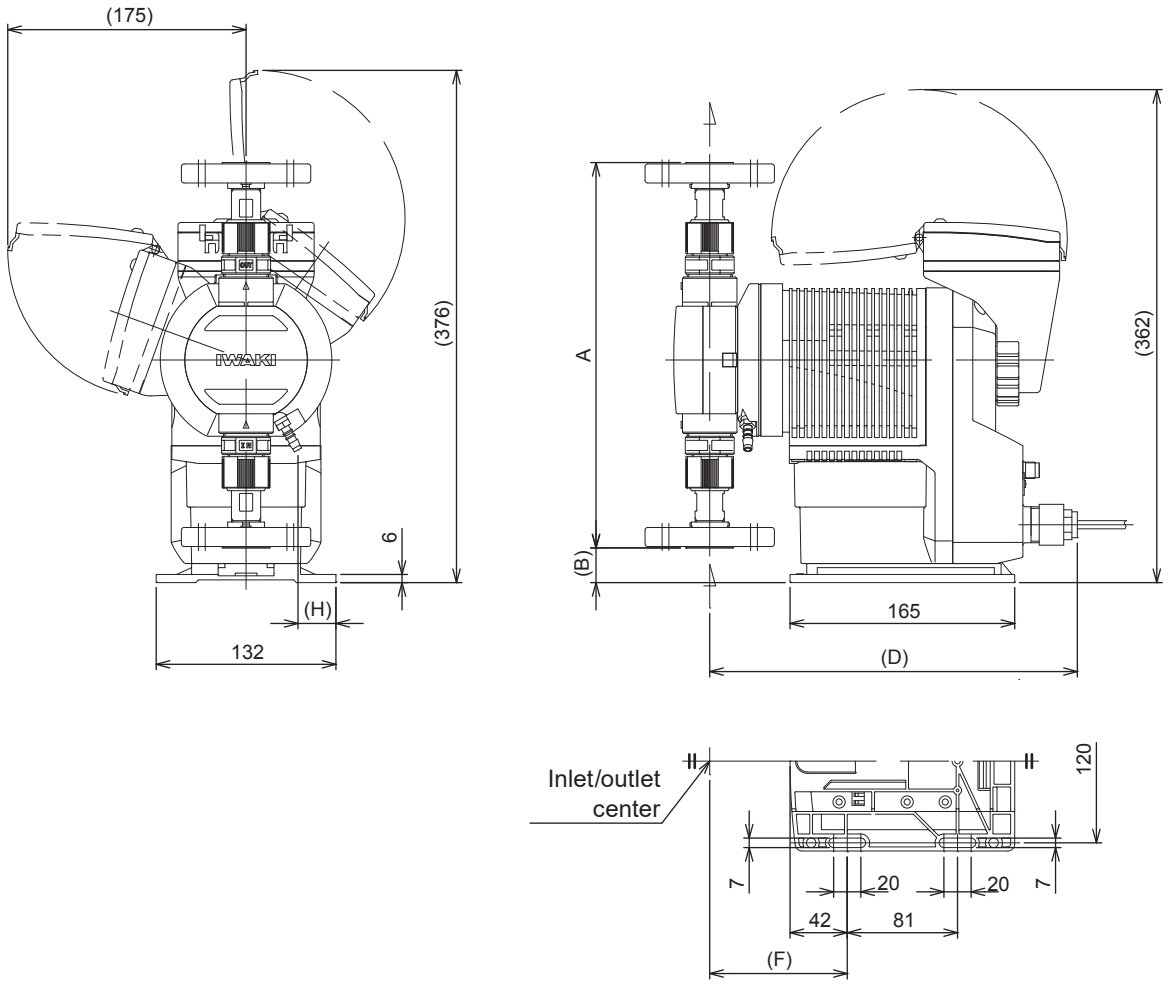


| | A | B | C | D | E | F | G | H |
|---|---|---|---|---|---|---|---|---|
| IX-B007 | 250 | 40 | - | 267 | - | 98 | - | 29 |
| IX-B015 | 259 | 36 | - | 267 | - | 98 | - | 29 |
| IX-B030/-B045 | 283 | 25 | - | 270 | - | 101 | - | 28 |

## ■ IX-B007/-B015/-B030/-B045 TC/TE T

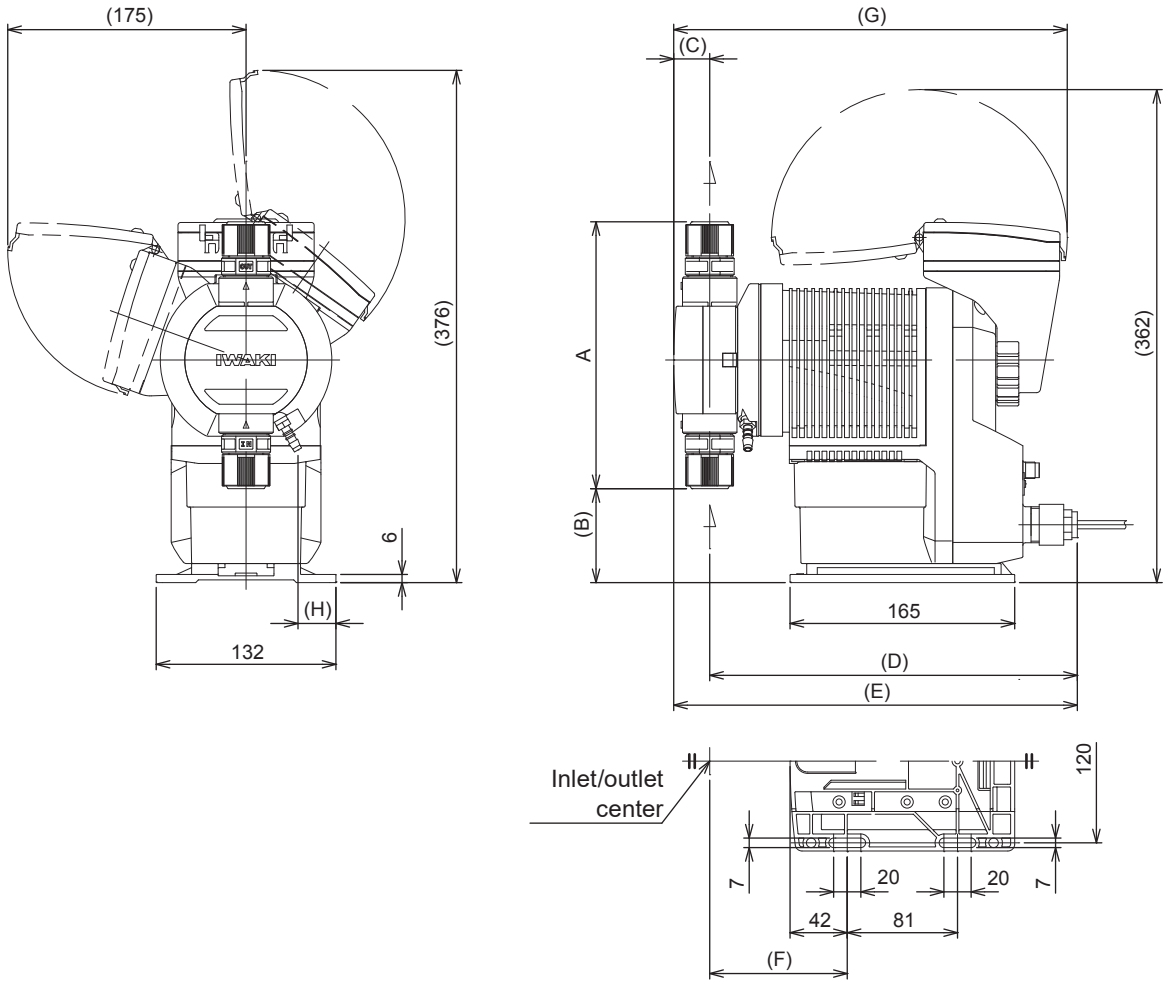


| | A | B | C | D | E | F | G | H |
|---|---|---|---|---|---|---|---|---|
| IX-B007 | 168 | 81 | 24.3 | 267 | 291 | 98 | 284 | 29 |
| IX-B015 | 177 | 77 | 24.3 | 267 | 291 | 98 | 284 | 29 |
| IX-B030/-B045 | 201 | 66 | 26.4 | 270 | 296 | 101 | 289 | 28 |

## ■ IX-B007/-B015/-B030/-B045 S6 R/N

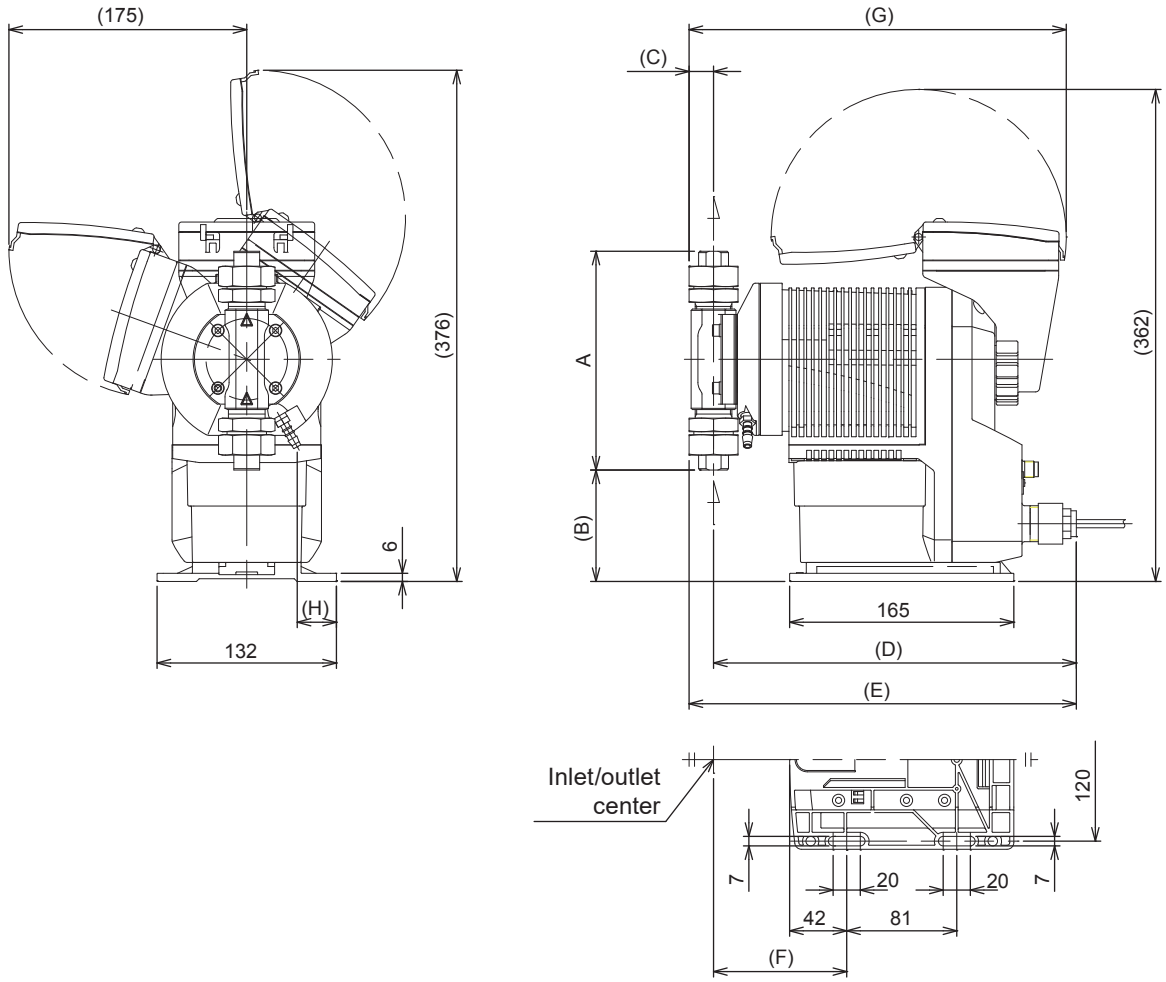


| | A | B | C | D | E | F | G | H |
|---|---|---|---|---|---|---|---|---|
| IX-B007/-B015 | 161 | 82 | 18 | 267 | 285 | 94.5 | 277.6 | 29 |
| IX-B030/-B045 | 177 | 72 | 19 | 269.5 | 288.5 | 97 | 281 | 28 |

## ■ IX-B007/-B015/-B030/-B045 S6 FJ/FD/FA

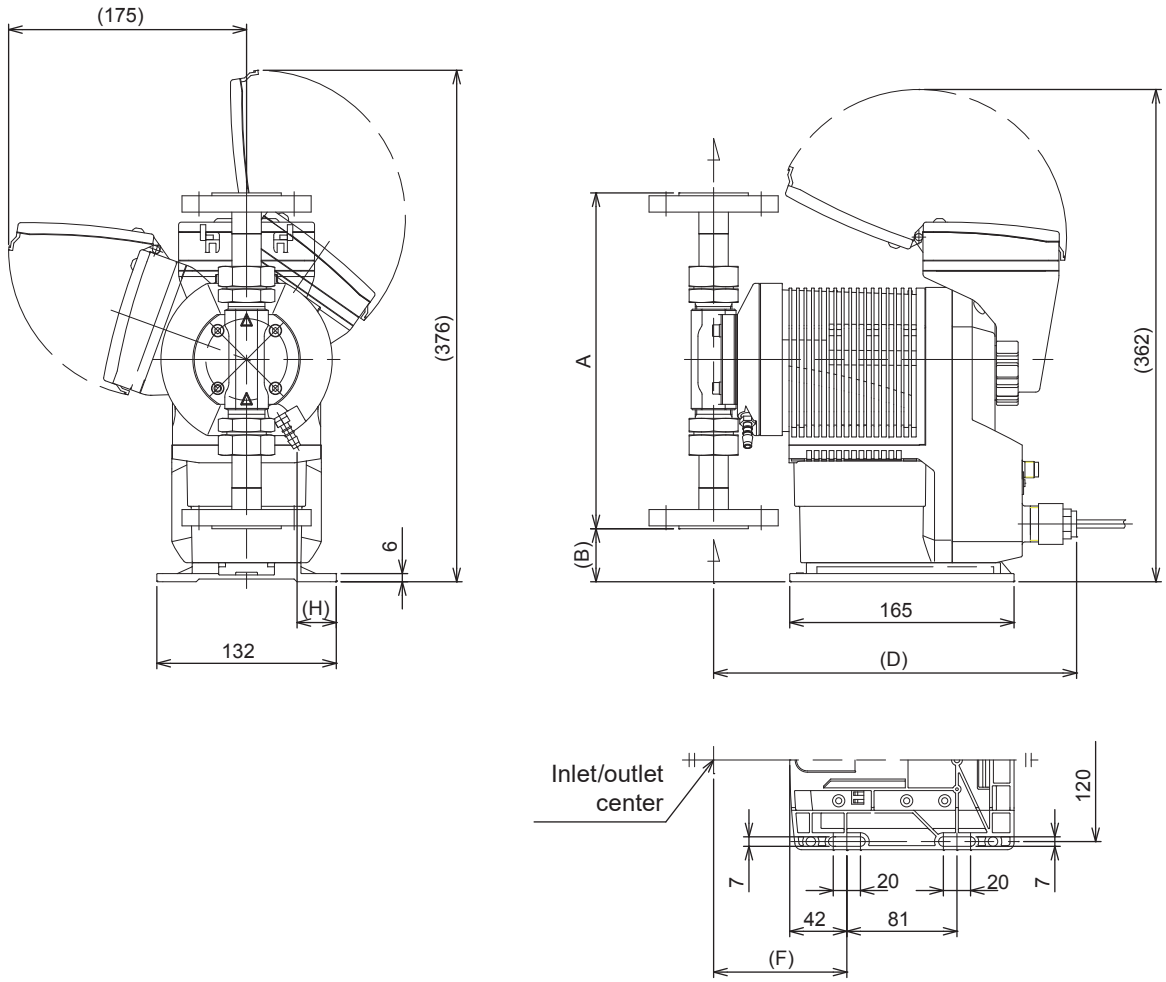


| | A | B | C | D | E | F | G | H |
|---|---|---|---|---|---|---|---|---|
| IX-B007/-B015 | 247 | 39 | - | 267 | - | 94.5 | - | 29 |
| IX-B030/-B045 | 263 | 29 | - | 269.5 | - | 97 | - | 28 |

## *Anchorage points guide (Wall-mount use of the base)*

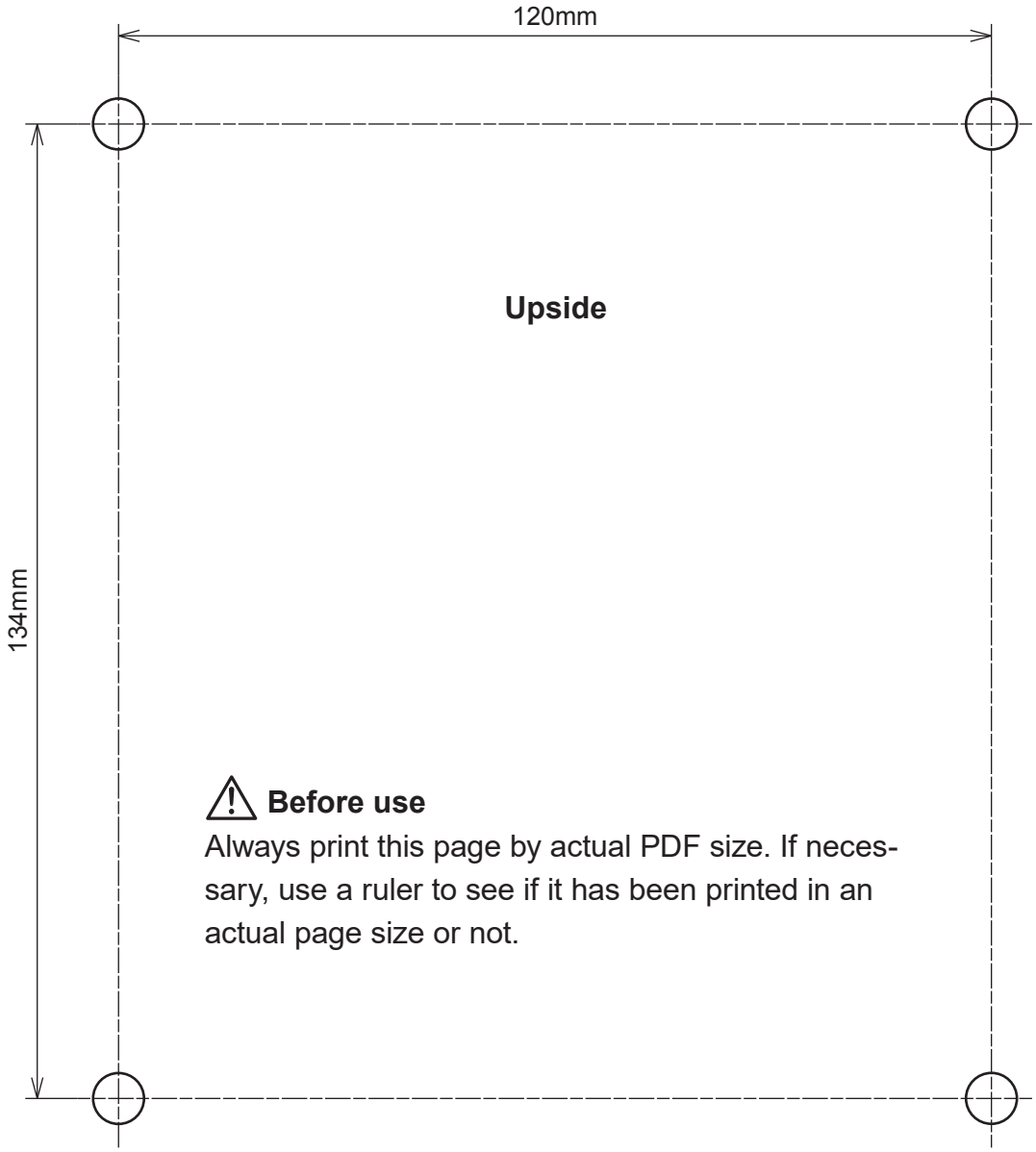


*Use this page and drill the wall for wall mounting with the base of the pump. Copy or cut as necessary. Use a proper drill size for the wall to have M6 anchor nut. Always select the rigid wall for wall-mounting of the pump. Do not drop. It's not the manufacturer's responsibility for any failure or damage resulting from a dropped pump.

# EC DECLARATION OF CONFORMITY

A copy of the original Declaration of Conformity

(SUPPLIER'S NAME)

WE

IWAKI CO.,LTD.

(ADDRESS)

6-6 2-CHOME KANDA-SUDACHO CHIYODA-KU TOKYO JAPAN

(PRODUCT)

DECLARE UNDER OUR SOLE RESPONSIBILITY THAT THE PRODUCTS

HI-TECHNO PUMP

(MODEL NAME)

IX-B SERIES

TO WHICH THIS DECLARATION RELATES ARE IN CONFORMITY

WITH THE FOLLOWING STANDARDS OR DIRECTIVES AS FAR AS APPLICABLE

(DIRECTIVES)

MACHINERY DIRECTIVE 2006/42/EC (ANNEX IIA)
EMC DIRECTIVE 2014/30/EU
RoHS DIRECTIVE 2011/65/EU

(STANDARDS)

EN ISO12100: 2010 EN61000-6-2: 2005 EN IEC63000: 2018
EN809: 1998 + A1: 2009 EN61000-6-4: 2007 + A1: 2011

(A PERSON WHO IS AUTHORISED TO COMPILE THE TECHNICAL FILE IN THE COMMUNITY)

IWAKI EUROPE GMBH
SIEMENSRING 115 D-47877 WILLICH GERMANY

NOTE: THIS DECLARATION BECOMES INVALID IF TECHNICAL OR OPERATIONAL MODIFICATIONS ARE INTRODUCED WITHOUT THE MANUFACTURER'S CONSENT.

T. Sawada.

**TSUTOMU SAWADA**

**DEPUTY SENIOR GENERAL MANAGER,**

**QUALITY ASSURANCE HEAD OFFICE**

Tokyo, Sep. 2, 2021

**(PLACE AND DATE OF ISSUE)** **(NAME AND SIGNATURE OR EQUIVALENT MARKING OF AUTHORIZED PERSON)**

DOCUMENT NO. IS-51K-560-2

# UK DECLARATION OF CONFORMITY

A copy of the original Declaration of Conformity

(SUPPLIER'S NAME)

WE

IWAKI CO.,LTD.

(ADDRESS)

6-6 2-CHOME KANDA-SUDACHO CHIYODA-KU TOKYO JAPAN

(PRODUCT)

DECLARE UNDER OUR SOLE RESPONSIBILITY THAT THE PRODUCTS

HI-TECHNO PUMP

(MODEL NAME)

IX-B SERIES

TO WHICH THIS DECLARATION RELATES ARE IN CONFORMITY WITH THE FOLLOWING REGULATIONS OR STANDARDS AS FAR AS APPLICABLE

(REGULATIONS)

S.I. 2008/1597 SUPPLY OF MACHINERY (SAFETY)
S.I. 2016/1091 ELECTROMAGNETIC COMPATIBILITY
S.I. 2012/3032 RESTRICTION OF HAZARDOUS SUBSTANCES

(STANDARDS)

EN ISO12100: 2010 EN61000-6-2: 2005 EN IEC63000: 2018
EN809: 1998 + A1: 2009 EN61000-6-4: 2007 + A1: 2011

(A PERSON WHO IS AUTHORISED TO COMPILE THE TECHNICAL FILE IN THE GB MARKET)

SENSYS LIMITED
UNIT 9 POND CLOSE WALKERN ROAD
STEVENAGE HERTS SG1 3QP UK

NOTE: THIS DECLARATION BECOMES INVALID IF TECHNICAL OR OPERATIONAL MODIFICATIONS ARE INTRODUCED WITHOUT THE MANUFACTURER'S CONSENT.

T. Sawada.

**TSUTOMU SAWADA**
**DEPUTY SENIOR GENERAL MANAGER,**
**QUALITY ASSURANCE HEAD OFFICE**

Tokyo, Sep. 6, 2021

**(PLACE AND DATE OF ISSUE)** **(NAME AND SIGNATURE OR EQUIVALENT MARKING OF AUTHORIZED PERSON)**

DOCUMENT NO. IS-51K-588

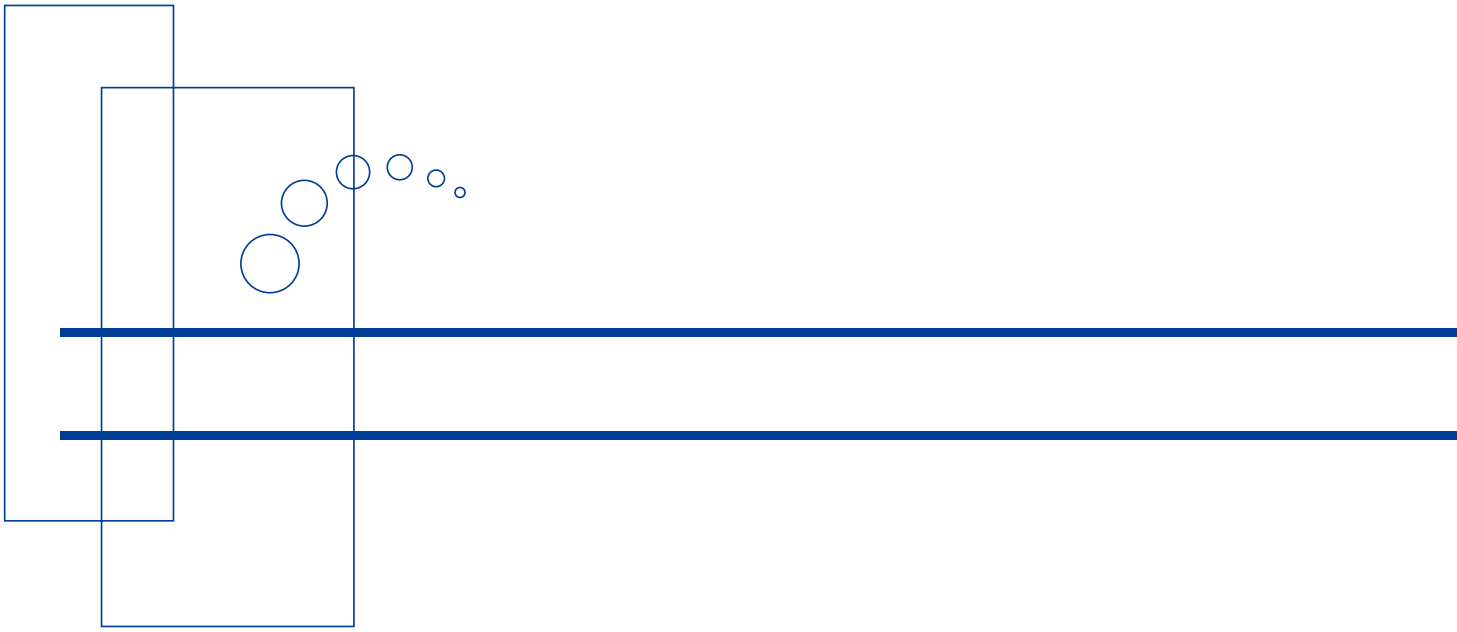


https://www.iwakipumps.jp

IWAKI CO.,LTD. 6-6 Kanda-Sudacho 2-chome Chiyoda-ku Tokyo 101-8558 Japan
TEL: +81 3 3254 2935 FAX: +81 3 3252 8892

**European Headquarter** / IWAKI Europe GmbH
TEL: +49 2154 9254 0 FAX: +49 2154 9254 48
**Germany** / IWAKI Europe GmbH
TEL: +49 2154 9254 50 FAX: +49 2154 9254 55
**The Netherlands** / IWAKI Europe GmbH (Netherlands Branch)
TEL: +31 74 2420011 FAX: +49 2154 9254 48
**Italy** / IWAKI Europe GmbH (Italy Branch)
TEL: +39 0445 561219 FAX: +39 0445 569088
**Spain** / IWAKI Europe GmbH (Spain Branch)
TEL/FAX: +34 934 741 638
**Poland** / IWAKI Europe GmbH (East Europe Branch)
TEL: +48 12 347 0755 FAX: +48 12 347 0900
**Denmark** / IWAKI Nordic A/S
TEL: +45 48 242345
**Finland** / IWAKI Suomi Oy
TEL: +358 10 201 0490
**Norway** / IWAKI Norge AS
TEL: +47 23 38 49 00

**Sweden** / IWAKI Sverige AB
TEL: +46 8 511 72900
**Belgium** / IWAKI Belgium N.V.
TEL: +32 13 670200 FAX: +32 13 672030
**France** / IWAKI France S.A.
TEL: +33 1 69 63 33 70 FAX: +33 1 64 49 92 73
**U.S.A.** / IWAKI America Inc.
TEL: +1 508 429 1440 FAX: +1 508 429 1386
**Brazil** / IWAKI Do Brasil Comercio De Bombas Hidraulicas LTDA.
TEL/FAX: +55 19 3244 5900
**China** (Shanghai) / IWAKI Pumps (Shanghai) Co., Ltd.
TEL: +86 21 6272 7502 FAX: +86 21 6272 6929
**China** (Hong Kong) / IWAKI Pumps Co., Ltd.
TEL: +852 2607 1168 FAX: +852 2607 1000
**China** (Guangzhou) / GFTZ IWAKI Engineering & Trading Co., Ltd.
TEL: +86 20 84350603 FAX: +86 20 84359181
**China** (Shenzhen) / IWAKI Pumps (Shenzhen) Co., Ltd.
TEL: +86 0755 8656 3696

**Singapore** / IWAKI Singapore Pte Ltd.
TEL: +65 6316 2028 FAX: +65 6316 3221
**Indonesia** / IWAKI Singapore Pte Ltd. (Indonesia Office)
TEL: +62 21 6906606 FAX: +62 21 6906612
**Malaysia** / IWAKIm SDN. BHD.
TEL: +60 3 7803 8807 FAX: +60 3 7803 4800
**Korea** / IWAKI Korea Co., Ltd.
TEL: +82 2 6238 4800 FAX: +82 2 6238 4801
**Taiwan** / IWAKI Pumps Taiwan Co., Ltd.
TEL: +886 2 8227 6900 FAX: +886 2 8227 6818
**Thailand** / IWAKI (Thailand) Co., Ltd.
TEL: +66 2 322 2471 FAX: +66 2 322 2477
**Australia** / IWAKI Pumps Australia Pty Ltd.
TEL: +61 2 9899 2411 FAX: +61 2 9899 2421


T1008-10 '26/09