Hi-Techno Pump

IX-C series

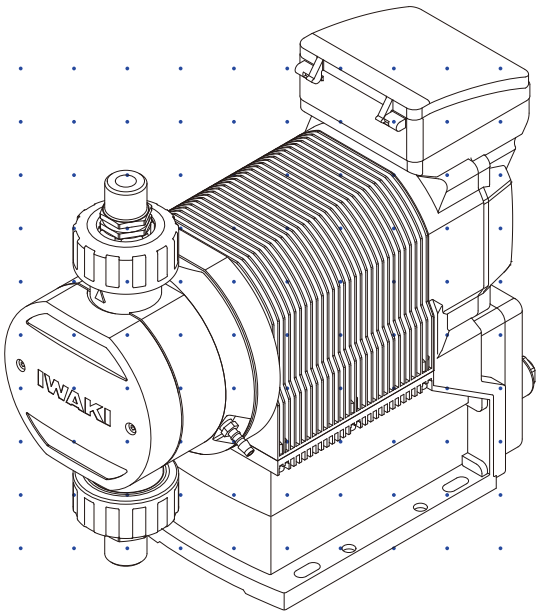

Instruction manual

Thank you for choosing our product.

⚠ Please read through this instruction manual before use.

This instruction manual describes important precautions and instructions for the product. Always keep it on hand for quick reference.

©2017 IWAKI CO., LTD.

Order confirmation

Open the package and check that the product conforms to your order. If any problem or inconsistency is found, immediately contact your distributor.

a. Check if the delivery is correct.

Check the nameplate to see if the information such as model codes, discharge capacity and discharge pressure are as ordered.

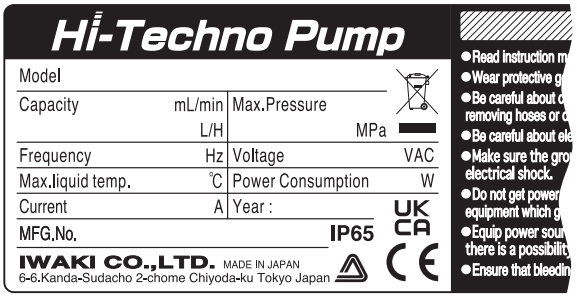

*The CE/UKCA markings on our product(s) are for us to market the product(s) into the European Union market / the Great Britain (England, Wales and Scotland) market, however, the CE/UKCA markings do not ensure any safety or conformity of the product(s) outside the EU/GB markets.
When the pump is incorporated into the equipment marketed in the EU/GB markets, such equipment must meet all the requirements of applicable directives/regulations.
In such a case, any person who places the equipment on the markets must carry CE/UKCA marks on the equipment as a manufacturer.

b. Check if the delivery is damaged or deformed.

Check for transit damage and loose bolts.

Contents

Order confirmation 2

Safety instructions..... 6

Warning 7
Caution 8
Precautions for use 10

Overview..... 12

Introduction 12
Pump structure & Operating principle 12
Features 13
Operational functions 13
Manual mode 13
EXT mode 14
Analogue proportional control 14
Pulse control 16
Batch control 16
Interval batch control 18
AUX function 18
Priming function 18
STOP functions 19
STOP function 19
Pre-STOP function 19
Protective functions 20
Interlock function 20
Diaphragm rupture detection 20
Pressure overload/Failed rotation control detection 20
Output functions 21
Alarm output function 21
Analog output function 21
Other functions 22
Suction speed setting 22
Maximum flow rate setting 22
Diaphragm position adjustment 22
Anti chattering programming 22
Output logic setting 22
Flow unit setting 22
Language setting 22
Keypad lock 22
Default setting 22
Part names 23

Pump 23
Operation panel 24
Basic displays & Pump states 25
Identification codes 26
Pump 26

Installation 27

Pump mounting 27
Pipework 28
Piping layout 28
Drain port (Vent hole) 29
Wiring 30
End terminals 30
Power voltage/Earthing 31
Signal wire connection 32
EXT IN 33
STOP IN 33
AUX IN/Analog OUT 34
Alarm OUT (DIN connector) 35

Operation 36

Before operation 36
Points to be checked 36
Retightening of pump head fixing bolts 36
Commissioning 37
Before a long period of stoppage (One month or more) 37
Perform a calibration 38
Calibration process 39
Operation programming 41
Programming flow 42
Menu screen 43
EXT mode selection 44
Calibration 46
Signal input setting 47
Analogue output setting 48
Alarm output setting (OUT 1) <Mechanical relay> 49
Alarm output setting (OUT 2) <PhotoMOS relay> 51
Data logging 52
Programming of other functions 53
Operation 56
Manual operation 56
EXT operation 56
AUX function 57
Priming function 57
Keypad lock 58

Keypad lock activation 58
Keypad lock release 58
Emergency stop 58

Maintenance 59

Troubleshooting 60
Pump 60
Error messages 61
Inspection 61
Daily inspection 61
Periodic inspection 61
Wear part replacement 62
Wear part list 62
Before replacement 64
Valve set replacement 64
Diaphragm replacement 65
Exploded view 69
Pump head, Drive unit & Control unit 69
Pump head 70
IX-C150 TC R 70
IX-C150 TC FJ 71
IX-C150 S6 R 72
IX-C150 S6 FJ 73
IX-C060 TC R 74
IX-C060 TC FJ 75
IX-C060 S6 R 76
IX-C060 S6 FJ 77
Specifications/Outer dimensions 78
Specifications 78
Pump 78
Power cable 78
Body colour 78
Control unit 79
Outer dimensions 80
IX-C060/-C150 TC/TE R/N-TB 80
IX-C060/-C150 TC/TE FJ/FD/FA-TB 81
IX-C060/-C150 TC/TE R/N-RF 82
IX-C060/-C150 TC/TE FJ/FD/FA-RF 83
IX-C060/-C150 S6 R/N-TB 84
IX-C060/-C150 S6 FJ/FD/FA-TB 85
IX-C060/-C150 S6 R/N-RF 86
IX-C060/-C150 S6 FJ/FD/FA-RF 87
EC DECLARATION OF CONFORMITY 88
UK DECLARATION OF CONFORMITY 89

Safety instructions

Read through this section before use. This section describes important information for you to prevent personal injury or property damage.

■ Symbols

In this instruction manual, the degree of risk caused by incorrect use is noted with the following symbols. Please pay attention to the information associated with the symbols.

⚠ **WARNING**	**Indicates mishandling could lead to a fatal or serious accident.**
⚠ **CAUTION**	**Indicates mishandling could lead to personal injury or property damage.**

A symbol accompanies each precaution, suggesting the use of "Caution", "Prohibited actions" and specific "Requirement".

Caution marks



Prohibition mark



Requirement mark



⚠Export Restrictions

Technical information contained in this instruction manual might be treated as controlled technology in your countries, due to agreements in international regime for export control.
Please be reminded that export license/permission could be required when this manual is provided, due to export control regulations of your country.

⚠WARNING


Electrical shock

Turn off power before service

Risk of electrical shock. Be sure to turn off power to stop the pump and related devices before service is performed.


Requirement

Stop operation

If you notice any abnormal or dangerous conditions, suspend operation immediately and inspect/solve problems.


Prohibition

Do not use the pump in any condition other than its intended purpose

The use of the pump in any conditions other than those clearly specified may result in failure or injury. Use this product in specified conditions only.


Do not remodel

Do not modify the pump

Alterations to the pump carry a high degree of risk. It is not the manufacturer's responsibility for any failure or injury resulting from alterations to the pump.


Wear protectors

Wear protective clothing

Always wear protective clothing such as an eye protection, chemical resistant gloves, a mask and a face shield during disassembly, assembly or maintenance work. The specific solution will dictate the degree of protection. Refer to SDS precautions from the solution supplier.


Prohibition

Do not damage the power cable

Do not pull, knot or crush the power cable. Damage to the power cable could lead to a fire or electrical shock if cut or broken.


Prohibition

Do not operate the pump in a flammable atmosphere

Do not place explosive or flammable material near the pump.

⚠CAUTION


Requirement

Qualified personnel only

The pump should be handled or operated by qualified personnel with a full understanding of the pump. Any person not familiar with the product should not take part in the operation or maintenance of the pump.


Prohibition

Use specified power only

Do not apply power other than that specified on the nameplate. Otherwise, failure or fire may result. Ensure the pump is properly grounded.


Prohibition

Keep electric parts and wiring dry

Risk of fire or electric shock. Install the pump where it can be kept dry.


Caution

Ventilation

Fumes or vapours can be hazardous with certain solutions. Ensure proper ventilation at the operation site.


Prohibition

Do not install/store the pump:

- In a flammable/corrosive atmosphere.
- In a dusty/humid environment.
- Where ambient temperature can exceed 0-50°C (32-122°F).
- In direct sunlight or wind & rain.


Requirement

Spill precautions

Ensure protection and containment of solution in the event of plumbing or pump damage (secondary containment).


Prohibition

Do not use the pump in a wet location

The pump is not waterproof. Use of the pump in wet or extremely humid locations could lead to electric shock or short circuit.


Earthing

Grounding

Risk of electric shock! Always properly ground the pump. Conform to local electric codes.


Electrical shock

Install a GFCI (earth leakage breaker)

An electrical failure of the pump may adversely affect other devices on the same line. Purchase and install a GFCI (earth leakage breaker) separately.


Requirement

Preventative maintenance

Follow instructions in this manual for replacement of wear parts. Do not disassemble the pump beyond the extent of the instructions.


Prohibition

Do not use a damaged pump

Use of a damaged pump could lead to an electric shock or death.


Requirement

Disposal of a used pump

Dispose of any used or damaged pump in accordance with local rules and regulations. If necessary, consult a licensed industrial waste disposal company.


Caution

Check pump head bolts

Liquid may leak if any of the pump head bolts become loose. Remove the bolt cover and tighten the bolts diagonally and evenly by the following torque before initial operation and at regular intervals.

Tightening torque

Model code	Torque	Bolts	Number of bolts
IX-C150	12 N•m	M8 hexagon head bolt	8
IX-C060	3.5 N•m	M5 hexagon head bolt	6

Precautions for use

- Electrical work should be performed by a qualified electrician. Otherwise, personal injury or property damage may result.

Caution

- Do not install the pump:
  - –In a flammable atmosphere.
  - –In a dusty/humid place.
  - –In direct sunlight or wind & rain.
  - –Where ambient temperature can exceed 0-50°C (32-122°F).

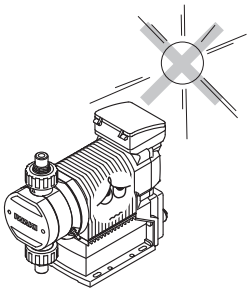

- Select a level location, free from vibration, that won't hold liquid. Anchor the pump with four M8 bolts so it doesn't vibrate. If the pump is not installed level, output may be affected.

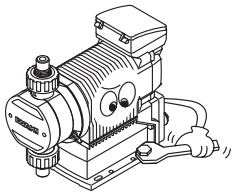

- When two or more pumps are installed together, vibration may be significant, resulting in poor performance or failure. Select a solid foundation (concrete) and fasten anchor bolts securely to prevent vibration during operation.

Caution

- Allow sufficient space around the pump for easy access and maintenance.

Requirement

- Install the pump as close to the supply tank as possible.

Requirement

- When handling liquids that generate gas bubbles (sodium hypochlorite or hydrazine solution), install the pump in a cool and dark place. Flooded suction installation is strongly recommended.

Caution

- The suction line I.D. should be equal to or wider than the I.D. of the pump.

Requirement

- Build up a flooded suction system for the viscous liquid delivery of 300mPa•S or more.

Requirement

- Use measures to keep the pump connections free from stress. Weight and thermal expansion/contraction of the piping can stress connection points.

Caution

- Overload protection will stop pump operation when discharge pressures reach 1.3 to 2.0 times higher than the pump maximum. If the discharge line cannot conservatively handle the maximum pressure, use a relief valve to safely depressurize the discharge line.



- Use care handling the pump. Do not drop. An impact may affect pump performance. Do not use a pump that has been damaged to avoid the risk of electrical damage or shock.

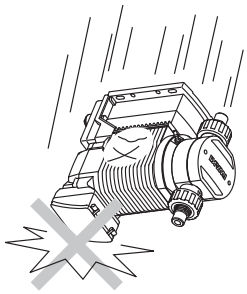

- The pump has a rating of IP65, but is not waterproof. Do not operate the pump while wet with solution or water. Failure or injury may result. Immediately dry off the pump if it gets wet.



- Do not close discharge line during operation. Solution may leak or pump and piping may break. Install a relief valve to ensure safety and prevent damaged plumbing.



- Solution in the discharge line may be under pressure. Release the pressure from the discharge line before disconnecting plumbing or disassembly of the pump to avoid solution spray.



- Wear protective clothing when handling or working with pumps. Consult solution SDS for appropriate precautions. Do not come into contact with residual solution.



- Do not clean the pump or nameplate with a solvent such as benzine or thinner. This may discolour the pump or erase printing. Use a dry or damp cloth or a neutral detergent.



- The S6 type may fall down due to the weight of its stainless pump head. Do not tilt the pump head forward in transit, installation and dismantlement.



- In accordance with the European Directive 2012/19/EU on waste electrical and electronic equipment (WEEE), this product features the crossed-out wheelie bin symbol. When this product is disposed of in household wastes, toxic components included in it can cause major environmental and human health problems. Use appropriate waste collection systems for recovery and recycling. Contact your local distributor or nearest Iwaki company for the detailed collection systems.



Overview

Pump characteristics, features and part names are described in this section.

Introduction

Pump structure & Operating principle

The IX series are diaphragm pumps with a brushless DC (BLDC) motor and feature a high turndown ratio & automatic controls.

Principle of operation

In the IX series design, a BLDC motor rotation controls the flow rate.

Motor rotation is transmitted to an eccentric cam through a reduction gear and then converted to reciprocating motion. Volumetric change occurs in the pump chamber as the diaphragm moves back and forth and liquid is pumped because of the suction and discharge check valves. Discharge speed changes the flow rate while the suction speed remains the same at any flow rate.

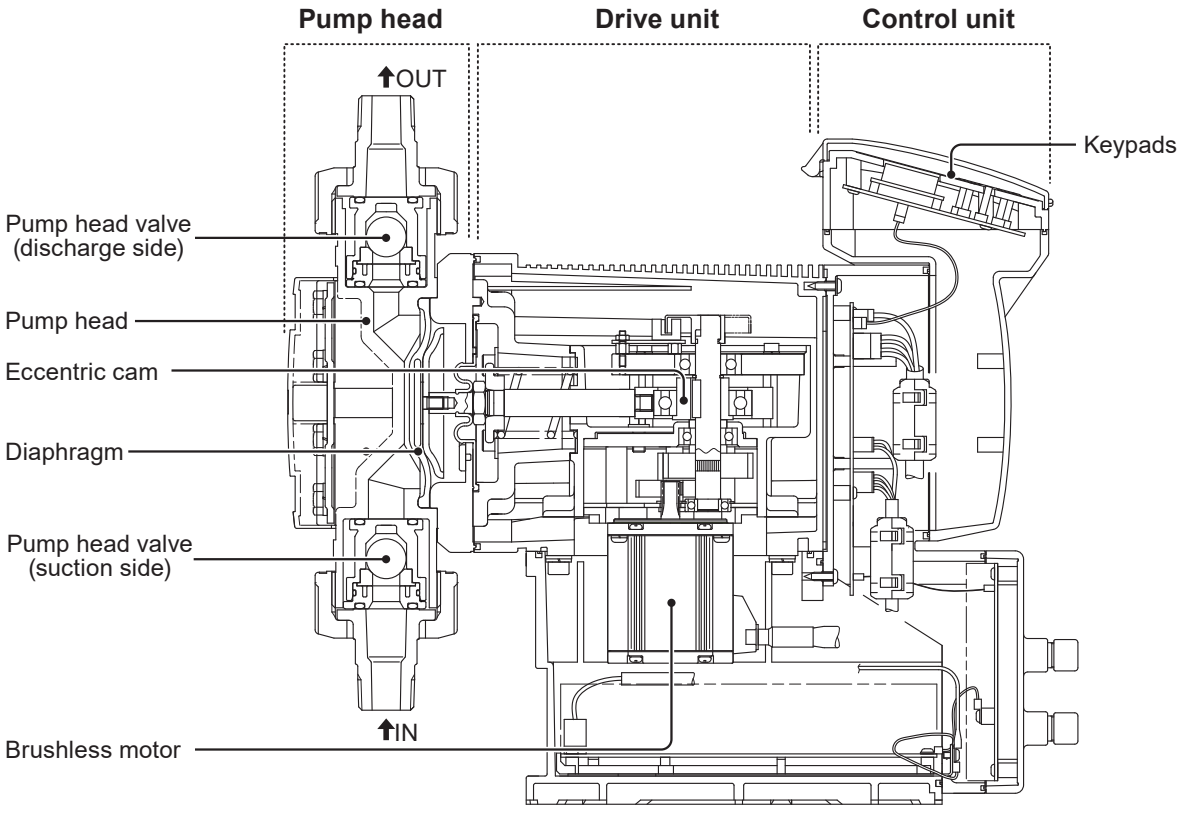

Features

- **High turndown ratio**
  Use of a BLDC control motor enables accurate control with a wide turndown ratio.
- **High repeatability**
  Highly-efficient valve design and accurate discharge-/suction-speed controls assure the high repeatability of chemical dosing (±1%).
- **Energy-saving design**
  Use of helical gears and an assist spring reduces power consumption by 70% compared to our existing metering pump designs (spring back).
- **Automatic control**
  The IX can automatically run along with analogue-, pulse-, batch- or interval batch-operation programming.
- **Multivoltage operation**
  The IX series can be used in all countries thanks to the universal power voltage (100-240VAC).
- **Safety design**
  A diaphragm rupture detection ensures user safety and a pressure overload detection protects the pump and pipework from an accidental discharge line pressure rise.
- **Ingress protection rating of IP65**

Operational functions

Manual mode

Run/stop the pump by key operation. The flow rate can be changed with the up and the down keys at any time during operation or stop. The operation LED lights in green colour during operation. *See page 56 for detail.*

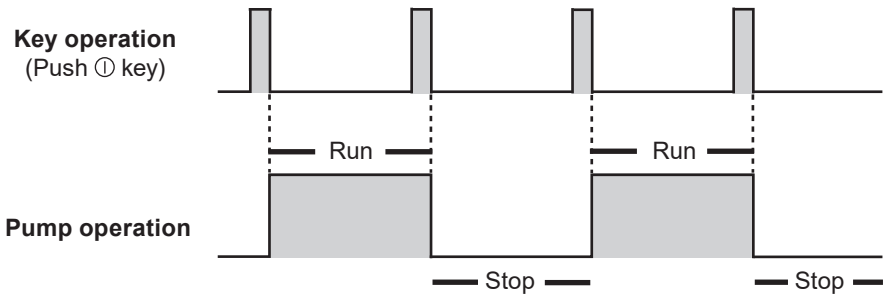

■ Analogue proportional control

ANA. P (analogue preset) programming (see page 44 & 56)

Select a proportional control pattern. 4 - 20mA, 20 - 4mA, 0 - 20mA and 20 - 0mA are available. During operation, the display shows the current flow rate. To show the current value, push the → key. To return to the flow rate display, push the ← key.

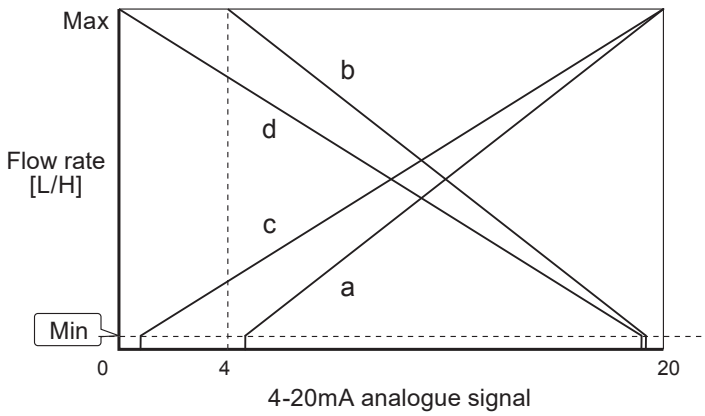

The left graph shows the flow rate at each pattern.

a. 4 - 20mA

b. 20 - 4mA

c. 0 - 20mA

d. 20 - 0mA

*The flow rate falls to 0mL/H if the pump runs beneath the minimum rate.

*The pump does not run over the maximum flow rate at any current value.

Example of use: pH control in a water treatment system

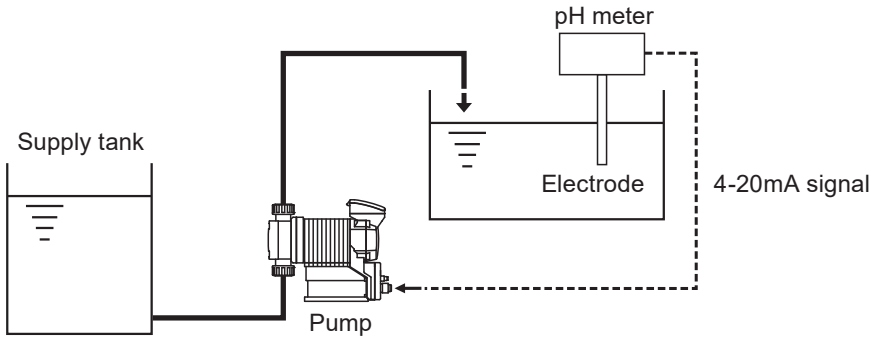

ANA. V (analogue variable) programming (see page 44 & 56)

The pump increases/decreases a stroke/flow rate in proportion to 0-20mA. Determine the operational behaviour by programming two set points and choosing one of the LINEAR, BOX and LIMIT patterns.
To show the current value, push the → key. To return to the flow rate display, push the ← key.

<LINEAR>

A stroke/flow rate changes with a current value by a programmed line.

Condition:
Set Point 1 (SP.1) = Ampere : 6mA, Flow rate : 45L/H
Set Point 2 (SP.2) = Ampere : 17mA, Flow rate : 127L/H

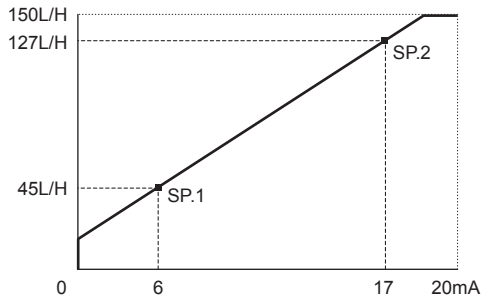

<BOX>

A stroke/flow rate changes with a current value by a programmed line. The rate does not exceed the Set Point 2 but then falls to 0 before the Set Point 1.

Condition:
Set Point 1 (SP.1) = Ampere : 6mA, Flow rate : 45L/H
Set Point 2 (SP.2) = Ampere : 17mA, Flow rate : 127L/H

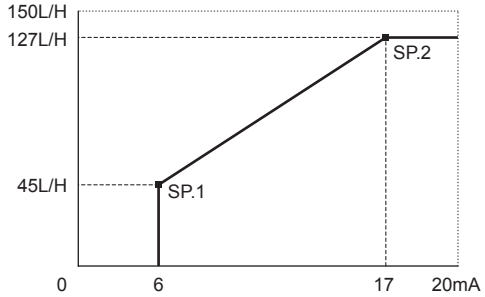

<LIMIT>

A stroke/flow rate changes with a current value by a programmed line. The rate does not falls below the Set Point 1 or exceed the Set Point 2.

Condition:
Set Point 1 (SP.1) = Ampere : 6mA, Flow rate : 45L/H
Set Point 2 (SP.2) = Ampere : 17mA, Flow rate : 127L/H

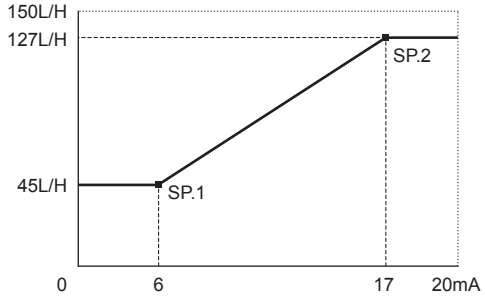

■ Pulse control (see page 44 & 56)

The flow rate is automatically controlled by the flow volume (ml) per pulse and the pulse signal frequency from a flow meter.

*It takes about 10 seconds for the IX to catch up with the change of the frequency. In other words, the pump stops 10 seconds after the pulse signal is stopped. Use the external interlock (or stop) signal to turn off the pump with no delay.

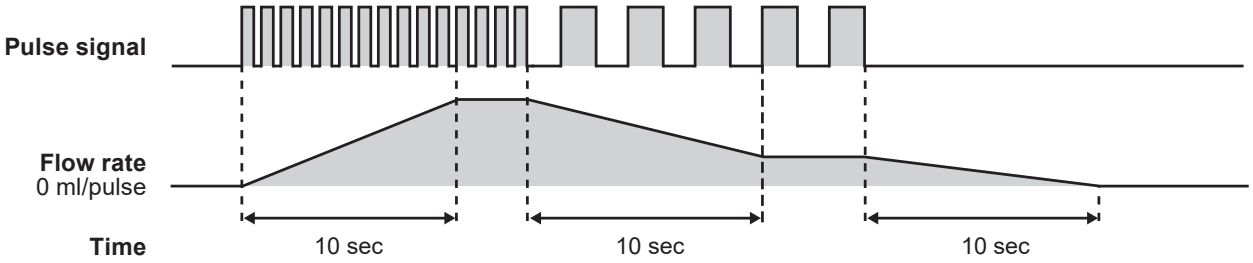

Example of use: Chemical dosing in a sewage treatment system

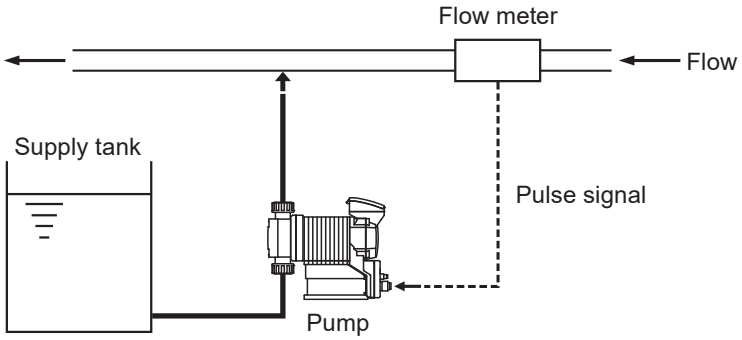

■ Batch control (see page 44 & 56)

The IX discharges a programmed flow volume per pulse and stops when it is completed. The programmed or remaining flow volume is shown on the controller until it has reduced to zero. In this control mode, the pump runs at the MAN speed (the pump speed in the manual mode). The pump behaviour can change depending on the setting of the buffer. See below.

When the buffer is OFF:

Any input of the external pulse signal will be cancelled when the pump is activated for the earlier pulse input. The next dosing becomes ready after the programmed flow volume has been completed.

*Note the control stops immediately when the ↵ key is pushed once.

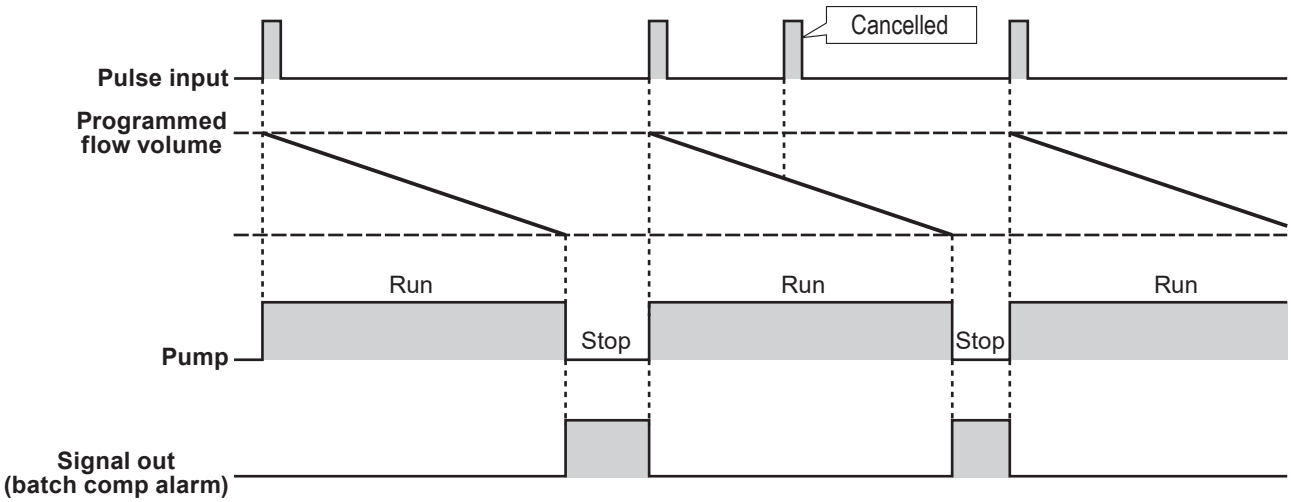

Example of use: Chemical dosing in a production line system

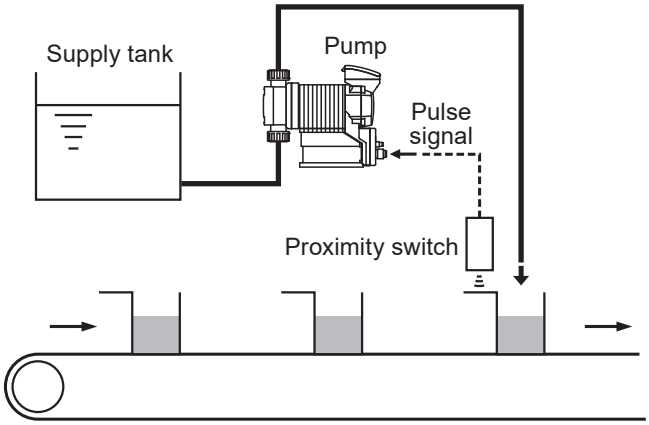

When the buffer is ON:

Every time the external pulse signal is inputted, the programmed flow volume per pulse is accumulated (max 65535 pulses) even when the pump is activated for the earlier pulse input.

*The control stops immediately and all the pulse accumulation is cleared when the ↵ key is pushed once.

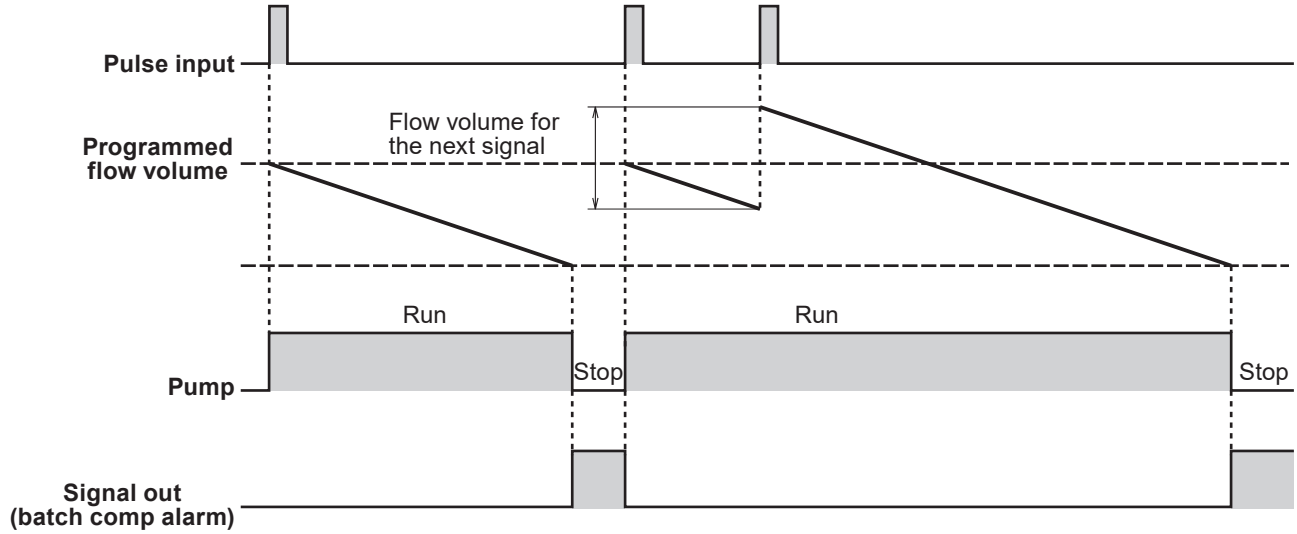

Pulse input with the ↵ key:

Instead of the pulse signal input, pushing the ↵ key can start or stop the batch control. In this case, the pump behaves as the control with the buffer OFF even when the buffer is set to ON in the batch control mode.

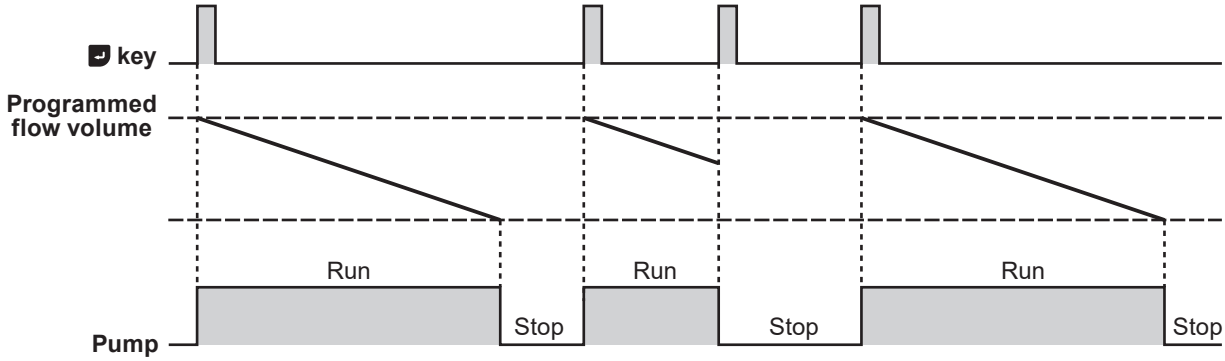

■ Interval batch control (see page 44 & 56)

To make an interval batch control, set a date and time interval and the flow volume. The IX discharges the programmed flow volume at a set interval. In the diagram below, the interval is set to 1 hour.

*The pump runs at the MAN speed. The control is triggered by either the external pulse signal or the push of the ↵ key. Push the ⏻ key to stop the control when it is triggered by the ↵ key.

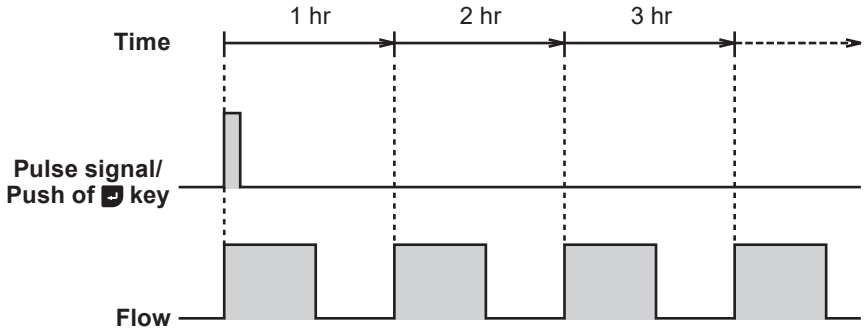

Example of use: Water transfer for a sprinkler system

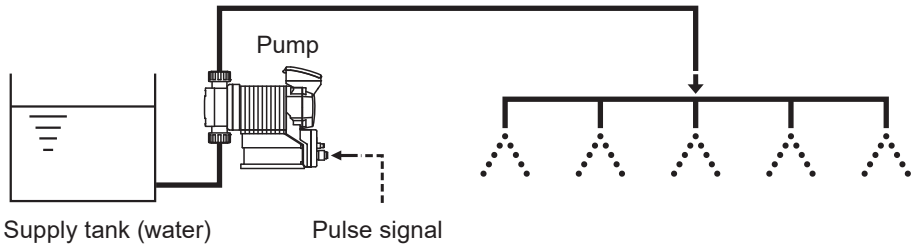

AUX function

The pump runs at the AUX speed while receiving the external signal via the AUX terminal. See page 53.

*This function works only when the pump is running in either MAN or EXT mode (see page 42.). The pump returns to the MAN or EXT mode once the AUX signal stops.

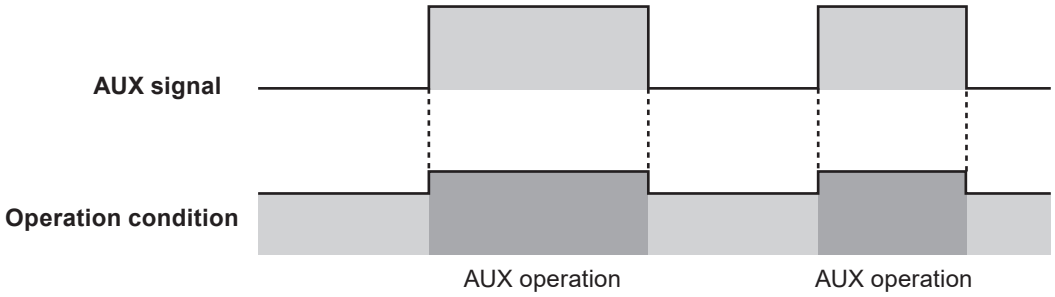

Priming function

The pump runs at the preset maximum flow rate (or the maximum stroke rate with the factory default setting) while both the UP and DOWN keys are pressed. Use this function for priming or degassing. The pump returns to normal flow rate after both the keys are released. See page 57 for detail.

*This function is available at any time except when the pump is in the MAN/EXT selection or menu selection (see page 42.).

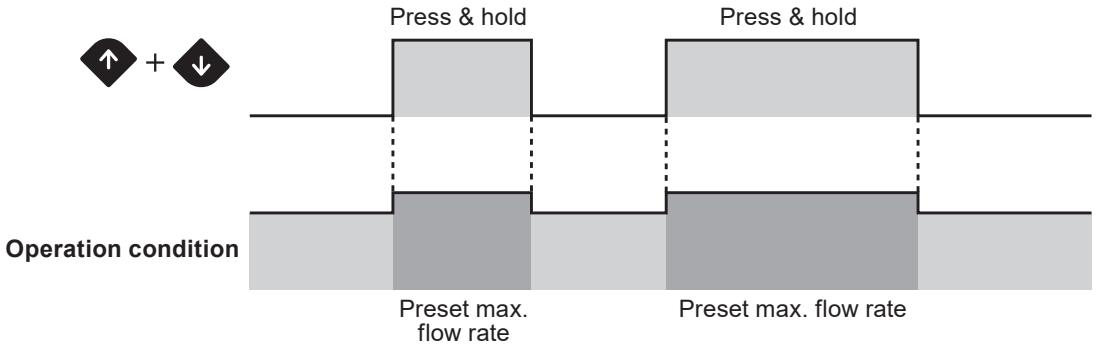

STOP functions

■ STOP function (see page 47)

The start/stop of operation can be controlled with the signal from a level sensor. The operation LED changes from green to red colour when the pump is receiving the STOP signal from a level sensor in operation.
See page 33 for the "STOP IN" wiring.

Example of use: Liquid level monitoring

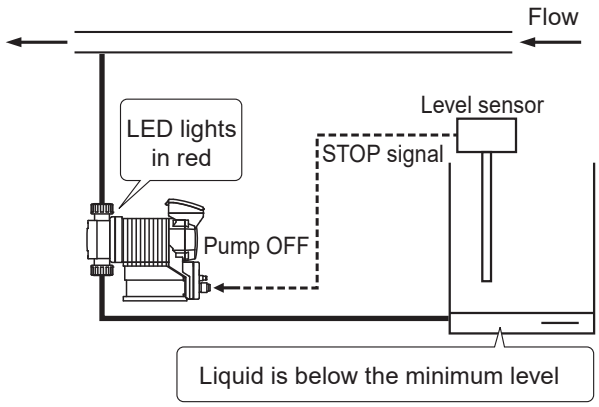

The pump stops when liquid has fallen below the minimum level.

■ Pre-STOP function (see page 47)

Liquid level in the supply tank can be monitored with the signal from a level sensor. The operation LED changes from green to orange colour when the pump is receiving the Pre-STOP signal from a level sensor in operation. See page 33 for the "STOP IN" wiring.

Example of use: Liquid level monitoring

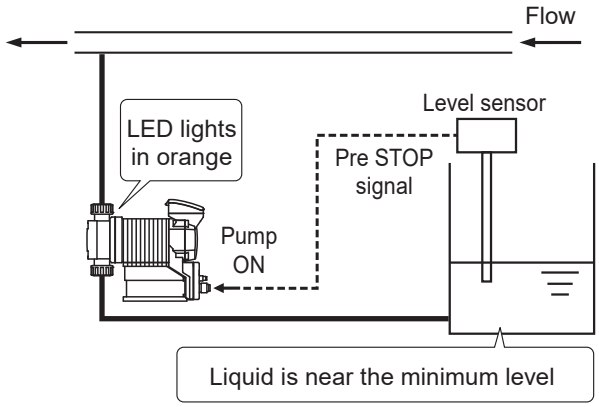

The operation LED lights in orange colour to inform a user that liquid comes close to the minimum level in a supply tank.

Protective functions

■ Interlock function (see page 33 & 47)

Interlock function works in the same way as the STOP function but uses a preference circuit. Use this function for emergency stop.

■ Diaphragm rupture detection (see page 47)

The pump stops right after a built-in sensor detects a leak in the compartment at the back of the diaphragm. In this condition, the operation LED lights in red colour. Replace a broken diaphragm as necessary. See page 65 for diaphragm replacement. To release this error condition, push the start/stop key (or the ESC key if the pump is under the Profibus control.).

NOTE

This capacitance sensor does not work properly if liquid conductivity is 1mS/m or below. Before sending pure water, oil or any other low-conductivity liquid, check the conductivity to see if it meets the minimum detection level. If it is not satisfied, the leak sensor is no longer usable. In this case a leak from the drain port is the only valid indicator. In either case, replace the diaphragm immediately when a leak is found.

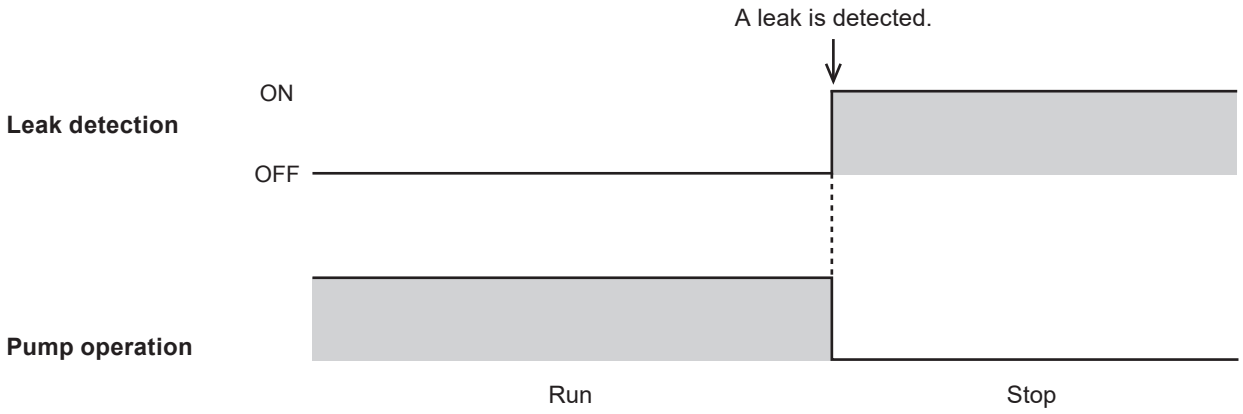

■ Pressure overload/Failed rotation control detection

The pump stops with the red operation LED blinking when a controller circuit board detects 1.3-2.0 times higher discharge pressure than the maximum level or when the hole IC which monitors the motor rotation has failed. If the pump is suspended (by the over-current protection) in either condition, the pump resumes operation 30 seconds later. If the suspended operation has recurred 5 times consecutively, the pump will not resume operation any more and will keep still. These error conditions can be released when the start/stop key is pushed once.

NOTE

The discharge pressure can rise 1.3-2.0 times higher than the maximum allowable level of the pump depending on operating conditions and piping layouts. If the pressure rises too sharp (with the closed discharge), it may not be even detected or curbed by the over-current protection. Set up a relief valve to protect the related devices on the discharge line from the possible pressure rise if necessary.

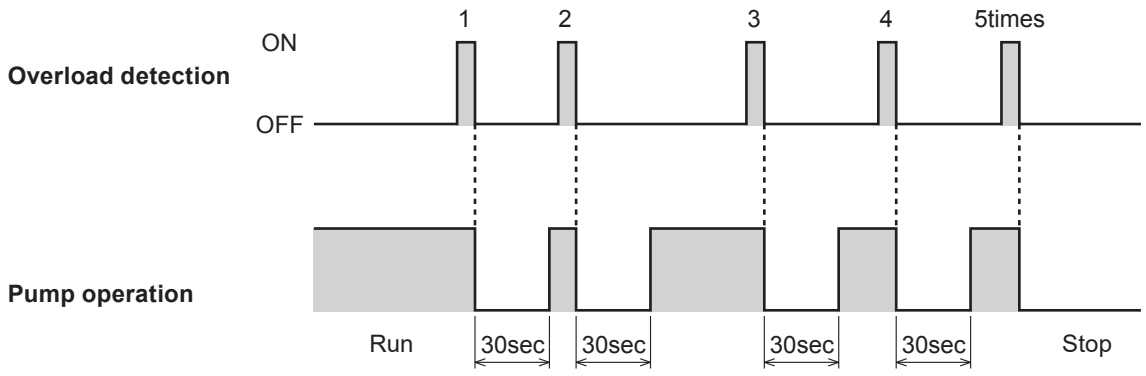

Output functions

■ Alarm output function (see page 49)

Enable or disable the output of the batch completion, STOP, Pre-STOP, interlock, diaphragm rupture detection, pressure overload detection, and/or drive error detection functions which is preset to the Alarm OUT 1 and 2, or the output of the volume proportional pulse which is preset only to the Alarm OUT 2. See the "Alarm OUT (DIN connector)" paragraph on page 35 for wiring diagram.

Alarm OUT 1 (OUT 1) : Mechanical relay output (no voltage contact 1a×1 250VAC 3A, resistive load)
Alarm OUT 2 (OUT 2) : PhotoMOS relay output (no voltage contact 1a×1 24VAC/DC 0.1A, resistive load)

*If the batch completion output is enabled to the Alarm OUT 1 or 2 (or if the volume proportional pulse output enabled only to the Alarm OUT 2), the other outputs (STOP, Pre-STOP, interlock, diaphragm rupture detection, pressure overload detection, and drive error detection) turn disabled in that Alarm OUT.
*The other outputs (STOP, Pre-STOP, interlock, diaphragm rupture detection, pressure overload detection, and drive error detection) can be enabled together (to the Alarm OUT 1 or 2), sharing the same output signal. See the controller display to tell which the signal it is.
*With the factory default setting, the range of the volume proportional pulse output is between 1Hz (at the min flow of the pump) and 200Hz (at the max flow rate of the pump). The max flow rate is manually reduced as shown below through the "Pump Max Rate" options in the "Other Features" menu.

IX-C060: Volume proportional pulse output behaviour

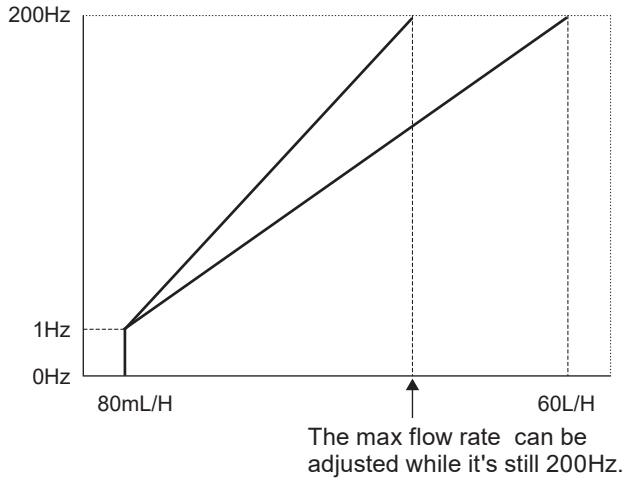

■ Analog output function (see page 48)

The pump transmits the 0-20mA analog signal in proportion to the preset flow rates (set point 1 and 2).
*If the actual flow has fallen below the minimum flow at each model (see page 78), the amperage goes down to the 0L/H level.
*The amperage does not fall below 0mA or exceed 20mA at any setting of the set point 1 and 2.

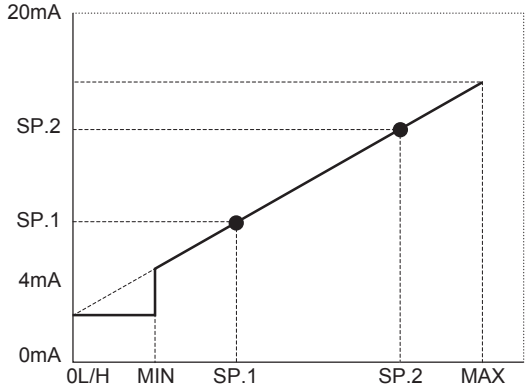

Other functions

■ Suction speed setting (see page 53)

Suction speed is adjustable by 4 levels depending on liquid property. Reduce suction speed so as to reduce inertia resistance for the delivery of viscous liquid or to prevent cavitation for gaseous liquid. Select 100% (default), 75%, 50% or 25%.

■ Maximum flow rate setting (see page 53)

The maximum allowable flow rate of the IX can be reduced if necessary. The default setting of the IX-C150 is 150L/H and the IX-C060 is 60L/H.

■ Diaphragm position adjustment (see page 53)

A pump shaft expands or contracts for easy diaphragm replacement. Select the "MAX OUT Pos." option through the "Other Features" menu in order to extend the pump shaft to the maximum. Select the "MAX IN Pos." option to contract it to the minimum and mount the pump head. See page 65 for the "Diaphragm replacement" section for detail.

■ Anti chattering programming (see page 53)

Program a pulse recognition time for the IX not to be adversely affected by chattering or noise. Factory default setting is 5 msec. This means the pump recognizes the pulse length of 5 msec or more. The other options are 1 and 2 msec and should be selected for the shorter pulse length, however, note the shorter the recognition time is, the more susceptible to the interference of noise the pump becomes. Note the maximum allowable input frequency of the IX is 100Hz.

■ Output logic setting (see page 53)

Select "normally open" or "normally closed" for the Alarm OUT 1 (OUT 1) and 2 (OUT 2) outputs.

■ Flow unit setting (see page 53)

Select L/H or GPH for the flow rate indication.

■ Language setting (see page 53)

Select your language through the language selection.

■ Keypad lock (see page 58)

The IX-C is shipped with the access codes at default values (00000). In order to prevent against unauthorized tampering, you will need to change the access codes to your own values.

■ Default setting

Power on the pump while pressing the ESC key to recall default setting. Note the flow volume per shot obtained through the calibration process (see page 39) remains the same.

Part names

Pump

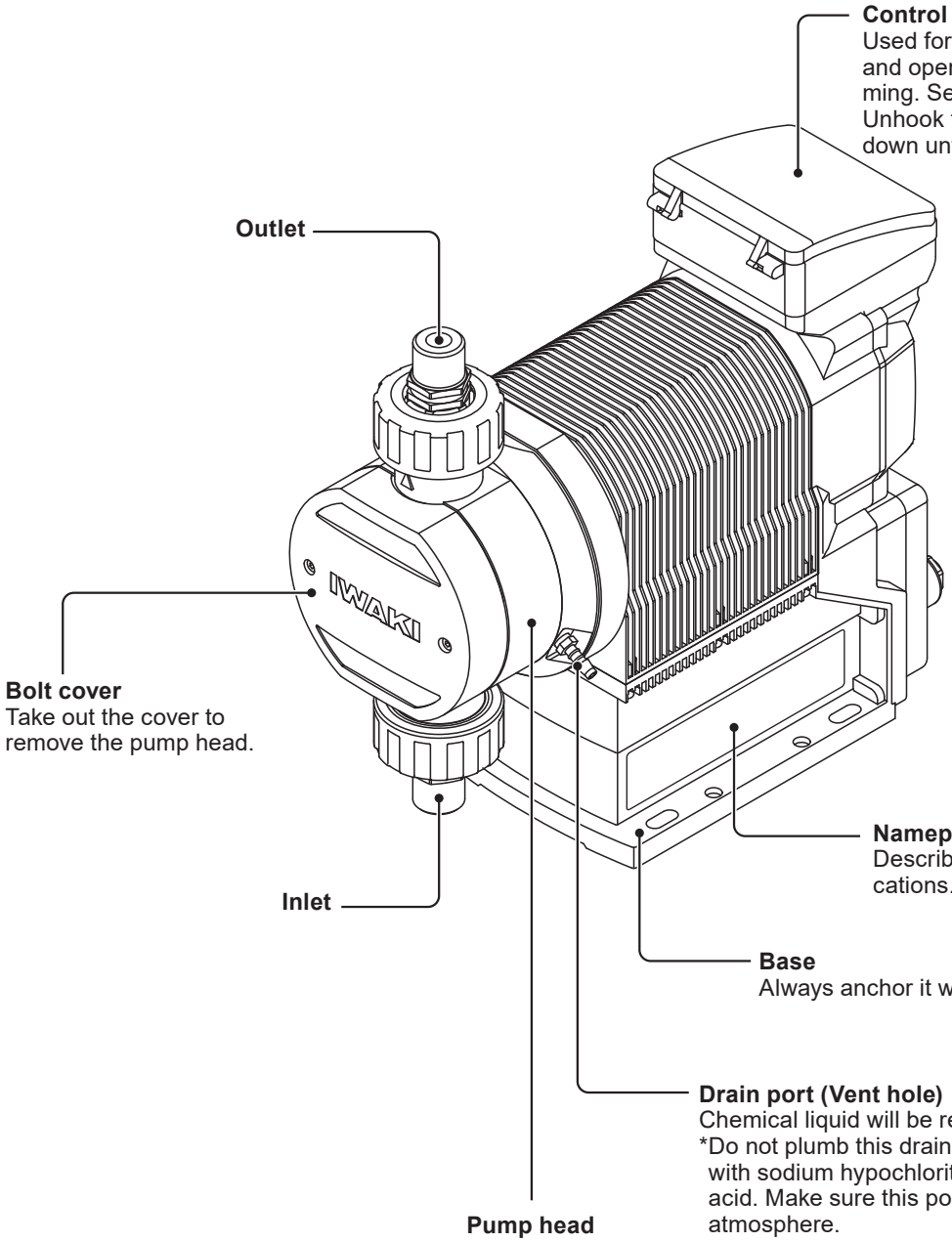

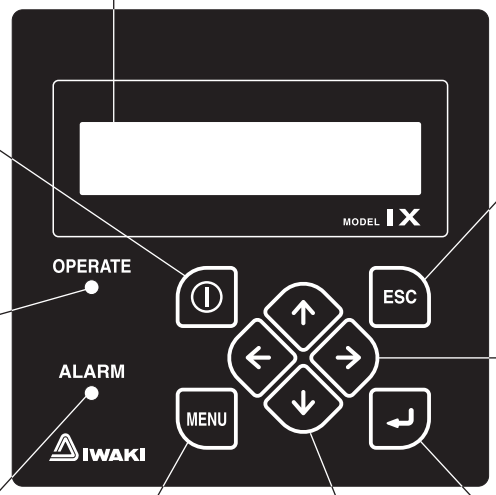

Display
An operational status, a selected mode and programmed values are shown here.

Start/Stop key
Used for starting/stopping the pump operation or moving back to the MAN/EXT selection.

ESC key
Used for cancelling programming and moving back to a previous menu.

Operation LED
Lights in green in operation and in red during stoppage, programming, error conditions. Lights in orange as Pre-STOP signal is entered. See the next page.

Left/Right key
Used for moving through items. Press and hold both keys for 3 seconds to disable keypads.

Enter key
Used for making a decision in the menu screen or MAN/EXT selection.

ALARM LED
Lights to notice the damaged diaphragm, the interlock activation or so.

MENU key
Used in the MAN/EXT selection screen for calling up the menu screen.

UP/DOWN key
Used for changing numeric values or selecting a programming mode.
The pump enter the priming mode while both the keys are pressed.

■ Basic displays & Pump states

	Display	Operation LED lights in red	Operation LED lights in green	Operation LED lights in orange	ALARM LED lights in red
Operation	Pump On (Manual) 150 L/H	—	Operation in manual mode	—	—
	Pump On (Ana.P) 150 L/H	—	Operation in EXT mode (Analogue control)	—	—
	AUX IN OVERRIDE! 150 L/H	—	AUX operation	—	—
	PRIMING OVERRIDE @ 150 L/H	—	Operation in priming mode	—	—
	Pre-Stop (MAN) 150 L/H	—	—	Pre-STOP function is active.	Pre-STOP function is active.*
Stop	Standby (Manual) 150 L/H	A wait state in manual mode	—	—	—
	Standby (EXT) Analog Preset	A wait state in EXT mode (analogue control)	—	—	—
	SELECT OPERATION MAN← →EXT(ANA.P)	MAN/EXT selection	—	—	—
	MAIN MENU: ← Program EXT →	Menu screen	—	—	—
	MOTOR OVERLOAD! S/S Key = Clear or CHECK PLUMBING BEFORE CLEARING!	Pressure overload protection is active.	—	—	Pressure overload protection is active.*
	LEAK DETECTED! S/S Key = Clear	Diaphragm is broken.	—	—	Diaphragm is broken (Alarm OUT 1 default setting).*
	DRIVE ERROR! S/S Key = Clear	Failed rotation control is detected.	—	—	Failed rotation control is detected.*
	STOPPED (Manual) -------	Operation stop in manual mode	—	—	Operation stop in manual mode*
	INTERLOCKED(MAN) -------	—	—	—	Interlock function activation (Alarm OUT 2 default setting)*

*The Alarm LED becomes active when a function is allocated to the Alarm OUT 1 or 2.

Identification codes

Each code represents the following information.

Pump

IX - C 150 TC R - TB __ - E ____
a b c d e f g h i

a. Series name

b. Drive unit

c. Pump unit (Max flow)

150 : 150 [L/H]
060 : 60 [L/H]

d. Wet end materials

Code	Pump head	Valve	Valve seat	O ring	Valve gasket	Diaphragm
TC	PVDF	CE	FKM	FKM	—	PTFE+EPDM*
TE			EPDM	EPDM		
S6	SUS316	SUS316 equivalent	SUS316	—	PTFE	

*EPDM is not a wet end.

Material code

PVDF : Polyvinylidene difluoride
EPDM : Ethylene-propylene rubber
CE : Ceramic
PTFE : Polytetrafluoroethylene
FKM : Fluorine-contained rubber
SUS316 : Austenite stainless

e. Connection

R : R thread N : NPT thread FJ : JIS flange FD : DIN flange FA : ANSI flange

f. Controller housing

TF : Top Front TB : Top Back TR : Top Right TL : Top Left RF : Right Face LF : Left Face

g. Control code

1 : IX-C060
2 : IX-C150

h. Power plug

Code	E
Plug shape	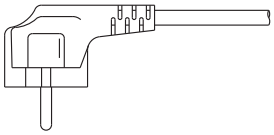
	Europe (1950mm length)

i. Special version

No code : Standard models
□□ : Customized models will be coded.

Installation

This section describes the installation of the pump, piping and wiring. Read through this section before work.

Points to be observed

Observe the following points when installing the pump.

- Risk of electrical shock. Be sure to turn off power to stop the pump and related devices before service is performed.
- If you notice any abnormal or dangerous conditions, suspend operation immediately and inspect/solve problems.
- Do not place explosive or flammable material near the pump.
- Use of a damaged pump could lead to an electric shock or death.

Pump mounting

Select an installation location and mount the pump.

Necessary tools

- Four M8 bolts (pump mounting)
- Adjustable wrench or spanner

1 Select a suitable place.

Always select a flat floor free of vibrations. See page 10 for detail.

2 Anchor the pump with four M8 bolts.

Be sure to fix the pump at four points.

NOTE

Select a level location, or the flow may reduce.

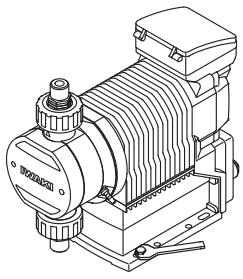

Pipework

■ Piping layout

Flooded suction application

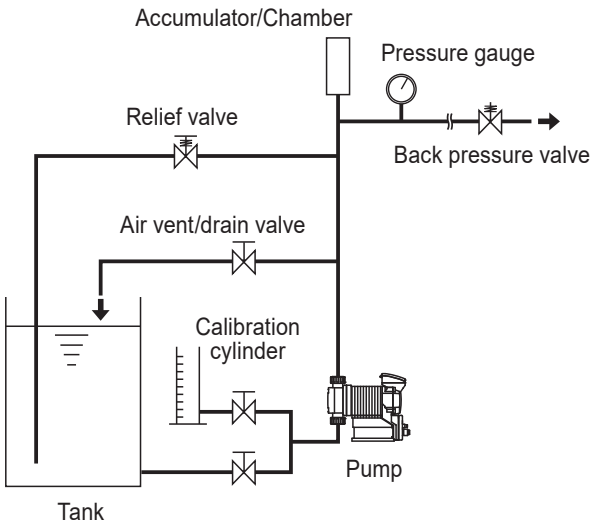

Suction lift application

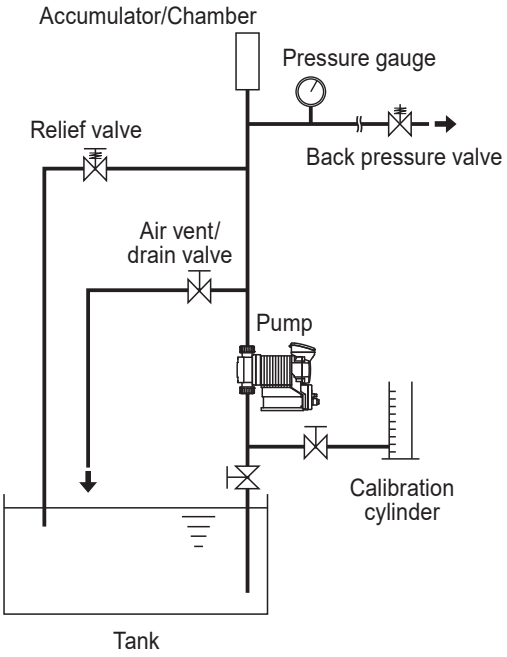

NOTE

- The suction line I.D. should be equal to or wider than the I.D. of the pump.
- When handling liquids that generate gas bubbles (sodium hypochlorite or hydrazine solution), install the pump in a cool and dark place. Flooded suction installation is strongly recommended.

Drain port (Vent hole)

Leaked liquid drains through the drain port at the time of accidental diaphragm rupture. Use an appropriate chemically-resistant tube to the port to safely collect the liquid.

NOTE

- Do not plug the drain port. The port functions as a vent hole to keep the pressure behind the diaphragm back atmospheric.
- Do not immerse the end of a drain tube in drained liquid, or the liquid may be pumped up into the compartment behind the diaphragm back.
- Liquid in the drain tank is the sign of the damaged diaphragm. Immediate inspection or repair is necessary. Do not leave this condition as it is. Fumes or vapors from certain solutions may move up into the pump via the drain tube and attack its inside.

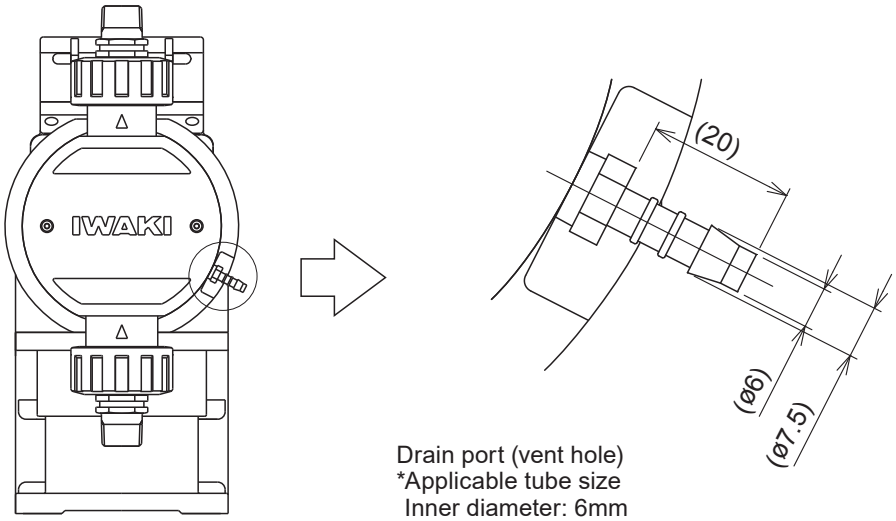

Drain port (vent hole)
*Applicable tube size
Inner diameter: 6mm
Outer diameter: 12mm or below

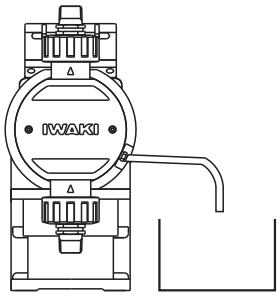

Empty drain tank

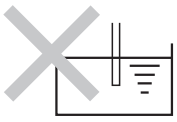

Do not locate the drain tube end below the liquid level.

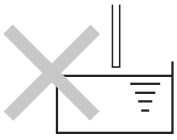

Do not take in fumes from corrosive chemicals such as sodium hypochlorite.

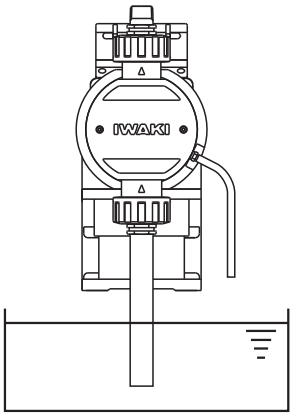

Noncorrosive chemicals in a supply tank. The drain tube end must stay above the liquid level.

Wiring

Wiring for power voltage, earthing and external signals.

Points to be observed

Observe the following points during wiring work.

- Electrical work should be performed by a qualified electrician. Always observe applicable codes or regulations.
- Do not apply power other than that specified on the nameplate. Otherwise, failure or fire may result.
- Do not perform wiring work while electric power is on. Otherwise, an electrical shock or a short circuit may result. Be sure to turn off the power before wiring work.
- Be careful for electric power not to be turned on during work.
- Replacement of a power cable should be conducted by a manufacturer, his agency or a skilled person. Otherwise, an accident may result.

End terminals

See the following diagram for detail.

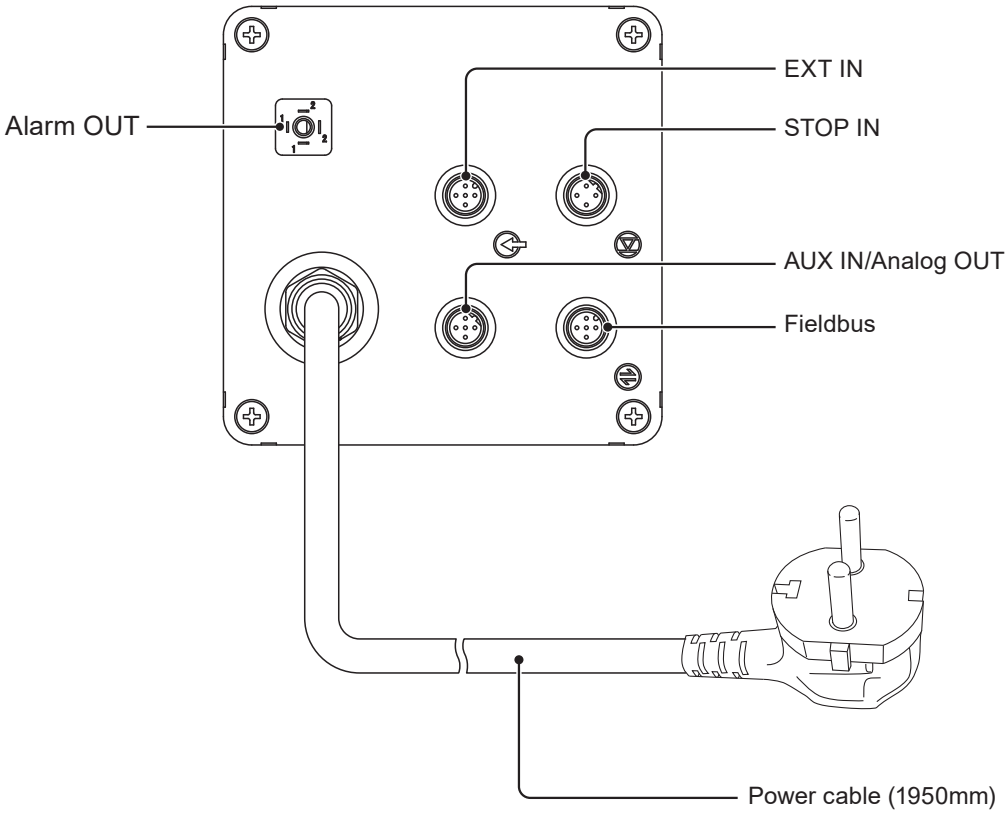

Power voltage/Earthing

Points to be checked

- Check that power voltage is turned off.

1 Insert the plug all the way seated in a socket.

NOTE

- Do not share a power source with a high power device which may generate a surge voltage. Otherwise an electronic circuit may fail. The conductive noise caused by an inverter also affects the circuit.
- Energize the pump with a power voltage via a mechanical relay or switch. Do not fluctuate the voltage, or CPU may malfunction. See page 32 for the precautions for ON-OFF control by cycling power.

Apply power sharply

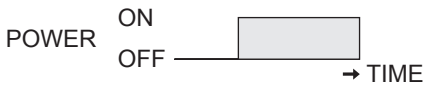

Do not apply gradually



Surge voltage

The electronic circuit in the control unit may fail due to a surge voltage. Do not place the pump close to a high power device of 200V or more which may generate a large surge voltage. Otherwise, take any of the following measures.

- Install a surge absorption element (such as a varistor with capacity of 2000A or more) via power cable or,

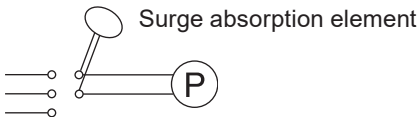

Recommended varistors:
Panasonic ERZV14D431
KOA NVD14UCD430
See manufacturer's catalogues for detail.

- A noise cut transformer via the power cable.

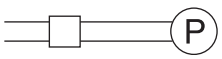

Noise cut transformer

Precautions for ON-OFF control by cycling power

The control unit is equipped with a CPU. To ensure the CPU to work properly, always start/stop the pump with the STOP signal for ON-OFF control. Try not to turn on and off the main power. Otherwise, observe the following points:

- Ensure the minimum OFF time of 10 minutes.
- When using a mechanical relay for ON-OFF operation, its contact capacity should be 5A or more. Or a contact point may break.
- If a mechanical relay with the contact capacity of 5A is used, the maximum allowable number of power cycles is limited to 150,000 times. Use the contact capacity of 10A or more when the power cycles exceed that number or when a power source is shared with a large capacity equipment which may cause a surge voltage and damage a contact point.
- Even the large mechanical relay may not last forever. If further longer life is desirable, use a SSR (Solid State Relay) such as the OMRON G3F that does not have a mechanical contact point. See manufacturer's catalogues for detail.

Signal wire connection

Points to be checked

- Check that power voltage is turned off.

Use our optional connector cables below or purchase DIN 4- and 5-pin female connector cables when using signal input and output.

Optional 5m DIN connector cables for:

The EXT input signal
The STOP input signal
The AUX input/Analog output signals
The Alarm output signal

NOTE

- Do not lay on these signal cables in parallel with a power cable. Otherwise the electromagnetic induction noise is generated and malfunction or failure may result.
- When using an external SSR for signal input, such a semiconductor relay must be capable of handling the maximum applied voltage from the pump.
  See specs of the selected SSR. The following SSRs at least meets the requirement.
  –OMRON G3FD-102S or G3FD-102SN
  –OMRON G3TA-IDZR02S or G3TA-IDZR02SM
- When using an external mechanical relay for signal input, its minimum application load should be 5mA or below.
- Insert the DIN 4- or 5-pin female connector as far as it will go and then tighten the skirt to make a secure connection.

*Use either an external no-voltage contact or an external open collector for the EXT signal.

■ EXT IN

To make pulse-, batch-, interval batch- and analogue-control operation or to activate interlock function, connect signal wires to the EXT terminals via the DIN 5-pin connection.

When using an open collector:

Pay attention to polarity. Pulse (1) and Interlock (2) are plus (+), and COM (4) is minus (-).

When using analogue control:

Pay attention to polarity. Analogue (3) is plus (+) and COM (4) is minus (-). Internal resistance is 200Ω.

When using a no-voltage contact:

Use a mechanical relay designed for an electronic circuit. Its minimum application load should be 5mA or less.

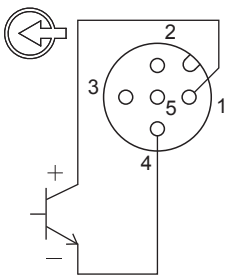

Wiring for
Pulse-, Batch-, Interval
batch-control

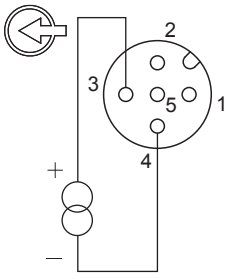

Wiring for
Analogue control

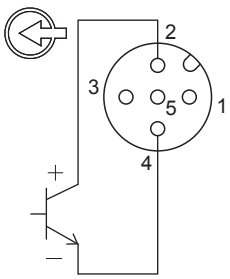

Wiring for
Interlock function

1 : Pulse
2 : Interlock
3 : Analogue
4 : COM
5 : 12VDC30mA or below

*The terminal 5 is an output and is not used. Do not short-circuit this terminal to COM (4).

■ STOP IN

To activate STOP function, connect signal wires to the STOP terminal via the DIN 4-pin connection.

When using an open collector:

Pay attention to polarity. STOP (1) and Pre-STOP (2) are plus (+), and COMs (3 and 4) are minus (-).

When using a no-voltage contact:

Use a mechanical relay designed for an electronic circuit. Its minimum application load should be 5mA or less.

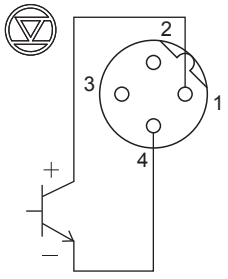

Wiring for
STOP function

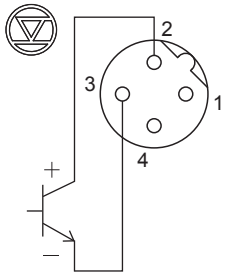

Wiring for
Pre-STOP function

1 : STOP
2 : Pre-STOP
3 : COM
4 : COM

NOTE

Our optional cable has 5 wires. Cut off a green wire to use it with the DIN 4-pin connector.

■ AUX IN/Analog OUT

To activate the AUX function or to use the analogue output, connect signal wires to the AUX terminal or the 4-20mA output terminal via the DIN 5-pin connection.

When using an open collector (for AUX IN):

Pay attention to polarity. AUX (3) is plus (+), and COM (4) is minus (-).

When using a no-voltage contact (for AUX IN):

Use a mechanical relay designed for an electronic circuit. Its minimum application load should be 5mA or less.

When using analogue output:

Pay attention to polarity. The 4-20mA (1) is minus (-) and 4-20mA (5) is plus (+). The max load resistance is 300Ω.

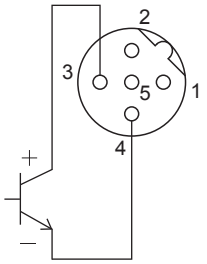

Wiring for
AUX function

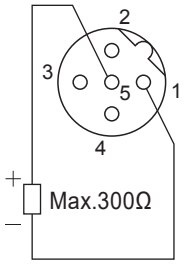

Wiring for
4-20mA output

1 : 4-20mA (negative)
2 : N.C.
3 : AUX
4 : COM
5 : 4-20mA (positive)

NOTE

When both the 4-20mA input terminal (EXT IN) and the 4-20mA output terminal (AUX IN/Analog OUT) are electrically-connected to the same external device such as user's PLC, channels of such a device must be electrically-isolated each other. Otherwise, use the isolator to either (or both) current signal line(s).

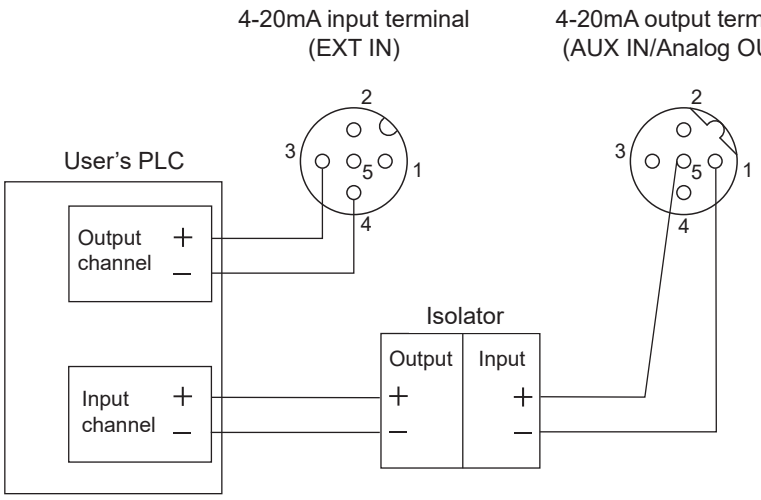

■ Alarm OUT (DIN connector)

To transmit the signal to an external device, connect signal wires to the OUT terminal via the DIN 4-pin connection.

Alarm OUT 1 (OUT 1) <Mechanical relay>: Enable or disable the alarm outputs of batch completion, STOP, Pre-STOP, interlock, motor overload (/drive error) and leak detection individually.

*Leak detection only is enabled at factory default setting.

Alarm OUT 2 (OUT 2) <PhotoMOS relay>: Enable or disable the alarm outputs of the volume proportional pulse, batch completion, STOP, Pre-STOP, interlock, motor overload (/drive error) and leak detection individually.

*Interlock only is enabled at factory default setting.

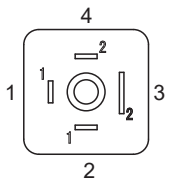

1 : Alarm OUT 1
2 : Alarm OUT 1
3 : Alarm OUT 2 (to the "PE" terminal of the output signal cable)
4 : Alarm OUT 2

Mounting direction of the output signal cable

Mount the DIN square connector cable in the following direction and secure it with a M3 screw.

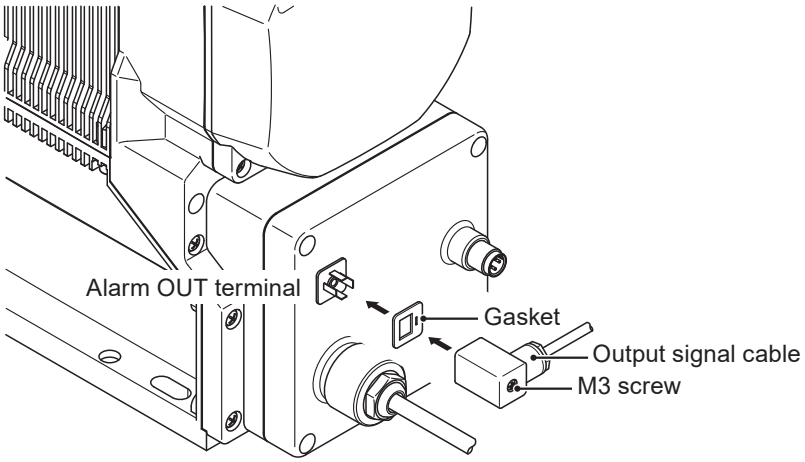

Operation

This section describes pump operation and programming. Run the pump after pipework and wiring are completed.

Before operation

First check piping and wiring are correct. And then make commissioning before starting operation.

Points to be checked

Before operation, check if:

- Liquid level in a supply tank is enough.
- Piping is securely connected and is free from leakage and clogging.
- Discharge/suction valves are opened.
- Power voltage range is correct.
- Electrical wiring is correct and is free from the risk of short circuit and electrical leakage.

Retightening of pump head fixing bolts

Important

The pump head fixing bolts may loosen when plastic parts creep due to temperature change in storage or in transit. This could lead to a chemical leak. Tighten the bolts diagonally and evenly by the rated torque at each model before initial operation and at regular intervals (every three months).

Tightening torque

Model code	Torque	Bolts	Number of bolts
IX-C150	12 N•m	M8 hexagon head bolt	8
IX-C060	3.5 N•m	M5 hexagon head bolt	6

Commissioning

Always make commissioning when first mounting the pump in your system or resuming operation after a long period of stoppage.

1 Open an air vent and a suction line.

Do not open a calibration line if any.

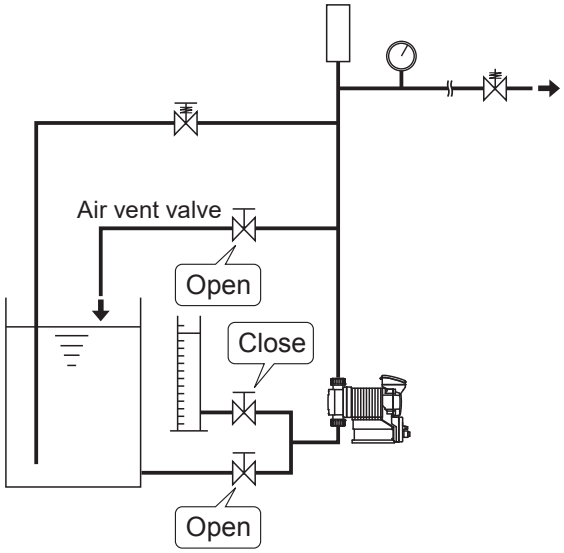

2 Supply the rated power voltage to the pump.

3 Start the pump at a low flow rate and gradually increase it to a target rate.

Continue operation for 10 minutes and check the pump and pipework for any abnormality.

4 Close an air vent line to introduce liquid to a main line.

Before a long period of stoppage (One month or more)

Clean wet ends and the inside of piping.

• Run the pump with clean water for about 30 minutes to rinse chemicals off.

Before unplugging the pump

• Always stop the pump by key operation and wait for three seconds before unplugging the pump. Otherwise, the last key operation may not be put in memory. In this case the pump unintentionally starts to run as powered on, discharging liquid.

When the pump does not transfer liquid at resuming operation.

• Clean the valve sets and remove foreign matters.

• If air is in the pump head, expel air through the above commissioning procedure.

Perform a calibration

Periodically make calibration to monitor an accurate flow through control display.
The pump is calibrated by pumping clean water at the maximum operating pressure before shipping (in the absence of a designation by a user), however, make calibration again in an actual operating condition as necessary. Follow the calibration process on the next page.

NOTE

The flow rate shown on the screen is a calculated value based on calibration and is not an actual flow rate.

Calibration is made to determine liquid volume per shot. Arrange your piping system according to the guide below to ensure the calibration is made correctly.

Suggested piping layout

Use a calibration cylinder connected to a suction line.

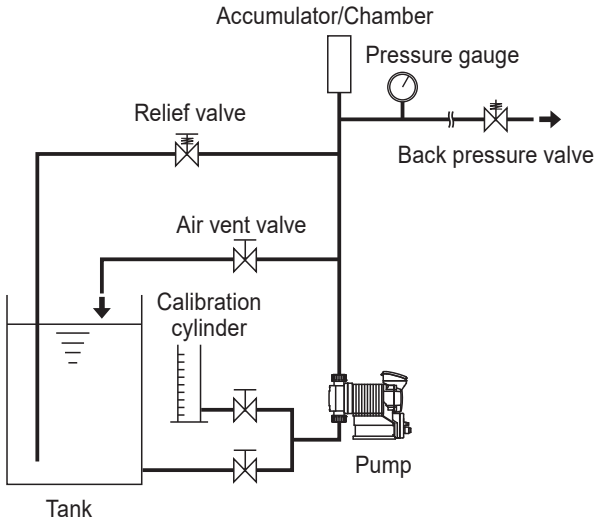

Bad example

Do not immerse a calibration tube in liquid level in a calibration cylinder. Otherwise, tube volume is added to the liquid volume to be measured, and calibration will be upset.

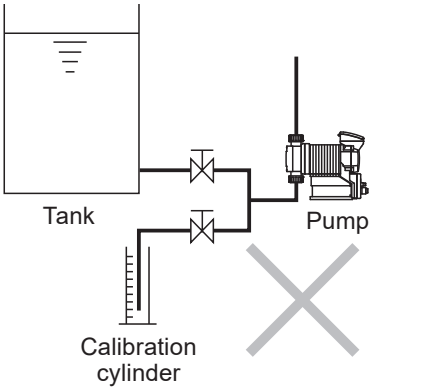

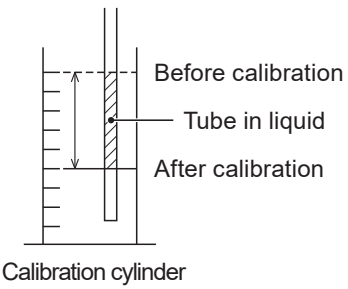

Calibration process

Obtain accurate flow volume per shot (e.g. about 16ml/shot for the C150 type, about 6ml/shot for the C060 type) by dividing the delivered liquid volume by the number of strokes.

1 Fill a calibration cylinder with liquid.

Open a calibration line to lead liquid from a supply tank to a calibration cylinder. And then close the suction line and measure liquid volume in the cylinder.

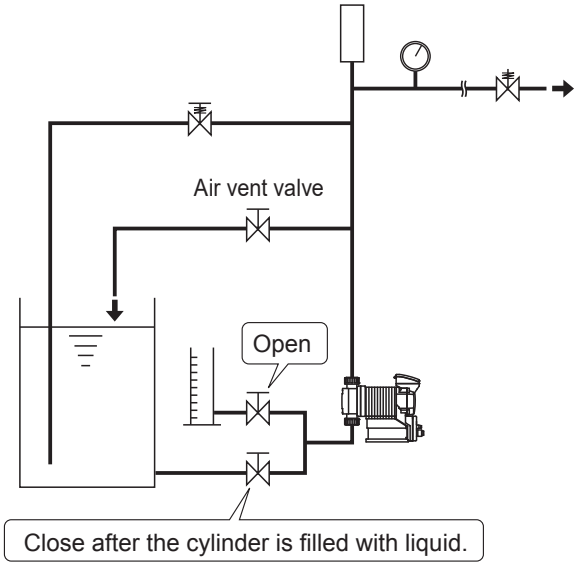

2 Supply the rated power voltage to the pump and programme a flow rate in the manual mode.

See page 13 for detail.

NOTE

The calibration accuracy won't change at any flow rate. The higher the flow rate is, the shorter time it takes, and vice versa.

3 Select the calibration mode through the menu screen.

See page 46 for detail.

4 Calibration operation programming

Set a waiting time and the number of strokes. The number of strokes should be determined depending on how much liquid remains in the calibration cylinder.

Waiting time to start calibration operation : 10(default)-999s
Number of strokes : 60(default)-120ST



Use UP and DOWN keys to set a waiting time.





Use UP and DOWN keys to set the number of strokes.

5 Start calibration operation.

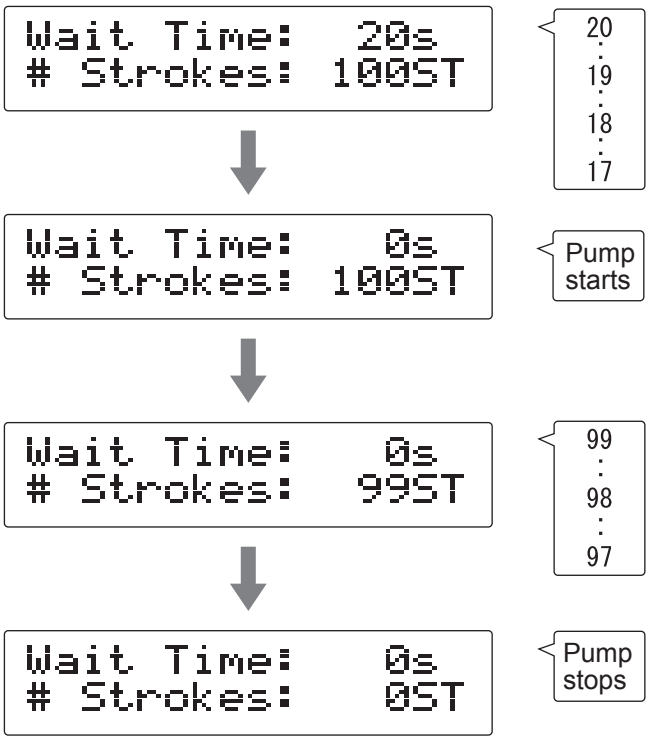

Push the Enter key after setting the number of strokes. The pump starts the countdown.

The pump starts to run for the set number of strokes as it comes to zero.

6 Measure liquid volume in the calibration cylinder again.

7 Enter how much liquid has reduced.

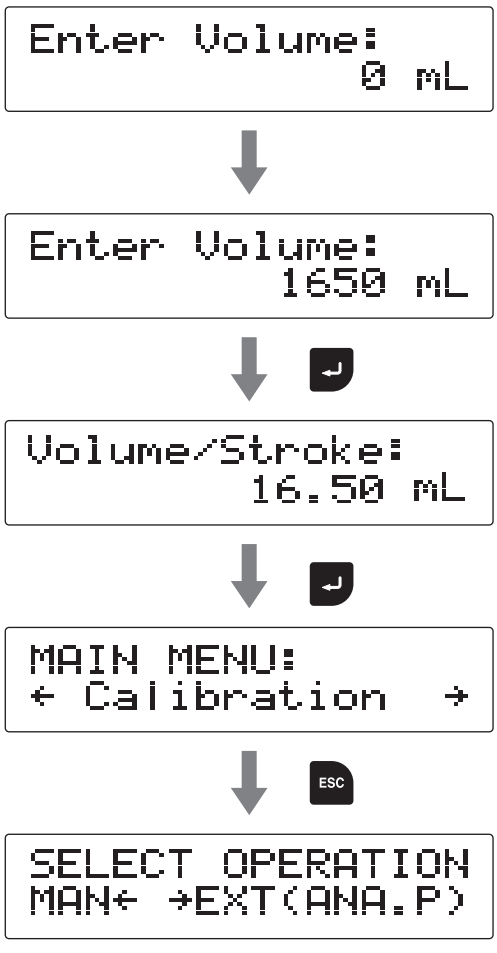

Use the UP and DOWN keys to set the volume reduction.

Push the Enter key once. The screen shows flow volume per shot.

The screen shows "ERROR! Volume Out Of Range!!" if the reduction is too little or too large. Enter correct liquid volume or recalibrate it.

NOTE

Calibration with high viscosity liquid at a full suction speed will often give rise to this error. Reduce a suction speed along with viscosity.

Push the ESC key to return to the wait mode.

Operation programming

The setting is made with the controller. The pump behaviour differs with each control mode.

Menu	Control mode/Function	Parameter		Default
Mode selection	-	MAN/EXT		MAN
External control	Analog preset control	0 - 20mA/ 4 - 20mA/ 20 - 0mA/ 20 - 4mA		4-20mA
	Analog variable control	SP1 current	0.0 - 20.0mA	4.0mA
		SP1 flow rate	0mL/H - 60L/H (C060)	0mL/H
			0mL/H - 150L/H (C150)	0mL/H
		SP2 current	0.0 - 20.0mA	20.0mA
		SP2 flow rate	0mL/H - 60L/H (C060)	60L/H
			0mL/H - 150L/H (C150)	150L/H
	Pulse control*	0.00625mL/PLS - 120mL/PLS (C060)		0.00625mL/PLS
		0.0156mL/PLS - 300mL/PLS (C150)		0.01562mL/PLS
	Batch control*	6.25mL/PLS - 120L/PLS (C060)		6.25mL/PLS
		15.6mL/PLS - 300L/PLS (C150)		15.62mL/PLS
	Interval batch control*	0 - 9day, 0 - 23Hr, 1 - 59min		0D : 0H : 1M
		6.25mL - 120L/PLS (C060)		6.25mL/PLS
		15.6mL - 300L/PLS (C150)		15.62mL/PLS
	Profibus control	Address : 1 - 126		50
Signal input	STOP	Closed = Pump OFF/ Closed = Pump ON		Closed = Pump OFF
	PreSTOP	Closed = Pump OFF/ Closed = Pump ON		Closed = Pump OFF
	Interlock	Closed = Pump OFF/ Closed = Pump ON		Closed = Pump OFF
	Leak detection	Enable/ Disable		Enable
Alarm	OUT 1	Batch Complete/ STOP/ Pre-STOP/ Interlock/ Leak Detection/ Motor Overload/ Drive Error		Leak Detection: Enable Other alarms: Disable
	OUT 2	Volume Prop. PLS/ Batch Complete/ STOP/ Pre-STOP/ Interlock/ Leak Detection/ Motor Overload/ Drive Error		Interlock: Enable Other alarms: Disable
Analogue output		SP1 current	0.0 - 20.0mA	4.0mA
		SP1 flow rate	0mL/H - 60L/H (C060)	0mL/H
			0mL/H - 150L/H (C150)	0mL/H
		SP2 current	0.0 - 20.0mA	20.0mA
		SP2 flow rate	0mL/H - 60L/H (C060)	60L/H
			0mL/H - 150L/H (C150)	150L/H
Others	Suction speed	100%/ 75%/ 50%/ 25%		100%
	Maximum flow rate	80mL/H - 60L/H (C060)		60L/H
		200mL/H - 150L/H (C150)		150L/H
	AUX speed	80mL/H - 60L/H (C060)		60L/H
		200mL/H - 150L/H (C150)		150L/H
	Diaphragm position	MAX OUT Pos./ MAX IN Pos.		MAX OUT Pos.
	Buffer	Enable/ Disable		Disable
	Anti-Chattering	1msec/ 2msec/ 5msec		5msec
	Output logic (OUT 1)	Normally Open/ Normally Close		Normally Open
	Output logic (OUT 2)	Normally Open/ Normally Close		Normally Open
	Unit	Litter/ US gallon		Litter
	Keypad lock	00000 - 99999		00000
	Language	English/Dutch/French/Danish/Spanish/German		English

*For these control modes, the calibrated flow volume per shot is applied to the minimum settable flow volume.

Programming flow

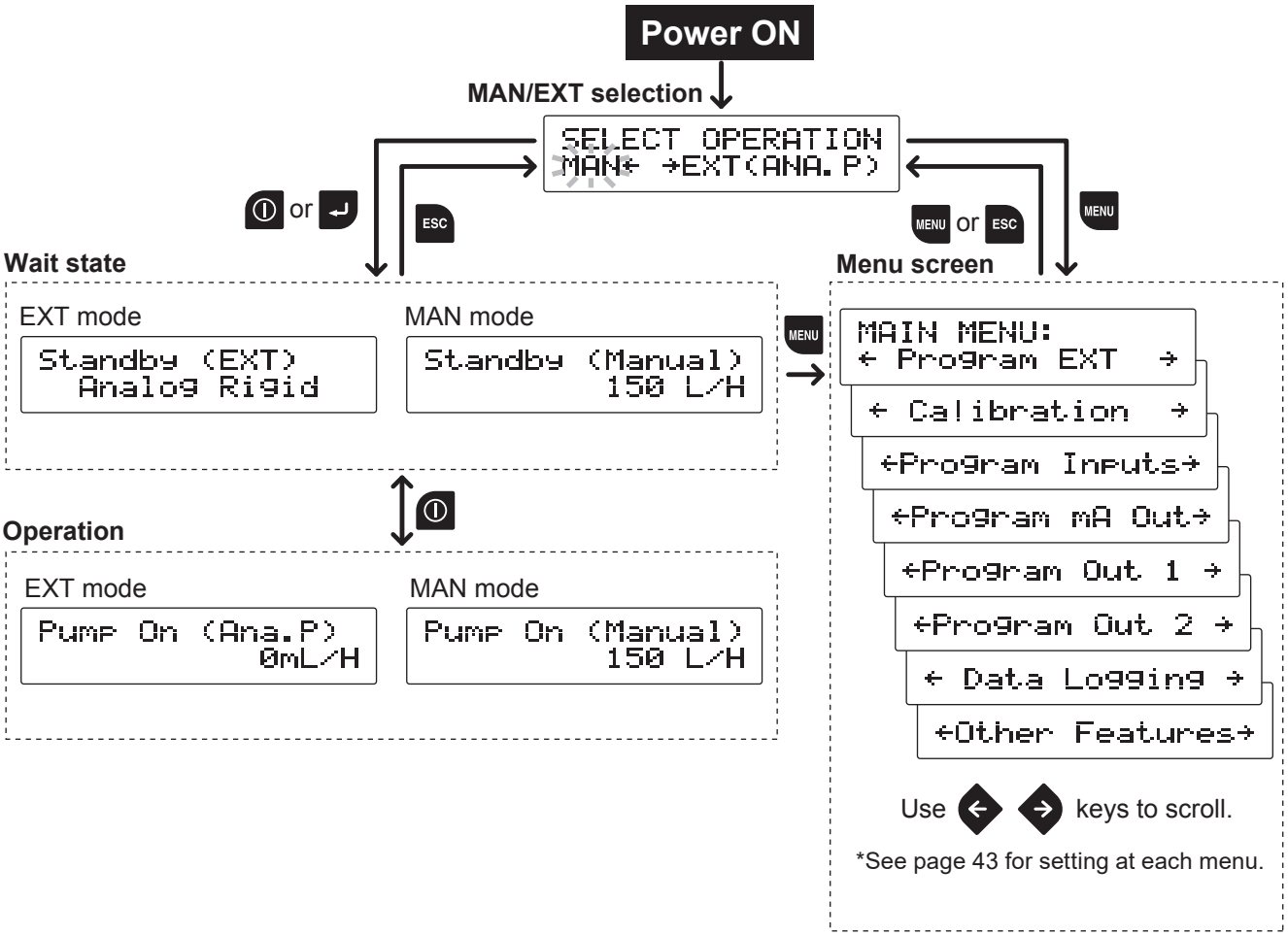

*To revert back to the default setting with the pump calibrated, turn on power while pressing the ESC key.

Menu screen

Push the MENU key in the MAN/EXT selection mode and call up the menu screen. Use the right and left keys to scroll through each menu item and then push the Enter key to make a selection. Pushing the MENU key again or ESC key in the menu screen, the previous mode will be recalled.



EXT mode selection
The pump can run in four different operating modes of Analogue, Pulse, Batch and Interval Batch for the external signal. See page 14-18 and 44 for detail.



Calibration
Calibrate the pump to obtain a correct flow rate on the screen. See page 39 and 46.



Signal input setting
Program STOP, Pre-STOP, Interlock functions and diaphragm rupture detection. See page 19, 20 and 47.



Analog output setting
Set the output current at SP1 and 2 flow rates to configure the analog signal output behaviour. See page 21 and 48.



Alarm output setting (OUT 1)
Enable or disable the output of the batch completion, STOP, Pre-STOP, interlock, diaphragm rupture detection, overload/failed speed detection, and/or drive error detection functions. See page 21 and 49.



Alarm output setting (OUT 2)
Enable or disable the output of the batch completion, STOP, Pre-STOP, interlock, diaphragm rupture detection, overload/failed speed detection, drive error detection, and/or volume proportional pulse functions. See page 21 and 51.



Data logging
The pump can display operating time, total flow volume, power-on time, the number of ON/OFF and software version. See page 52.



Programming of other functions
Program a suction speed, a max flow rate, an AUX speed, a diaphragm position, an anti-chattering time, butter ON/OFF, output logics, a flow rate unit and your language or so. See page 22, 53, 54 and 55.

■ EXT mode selection

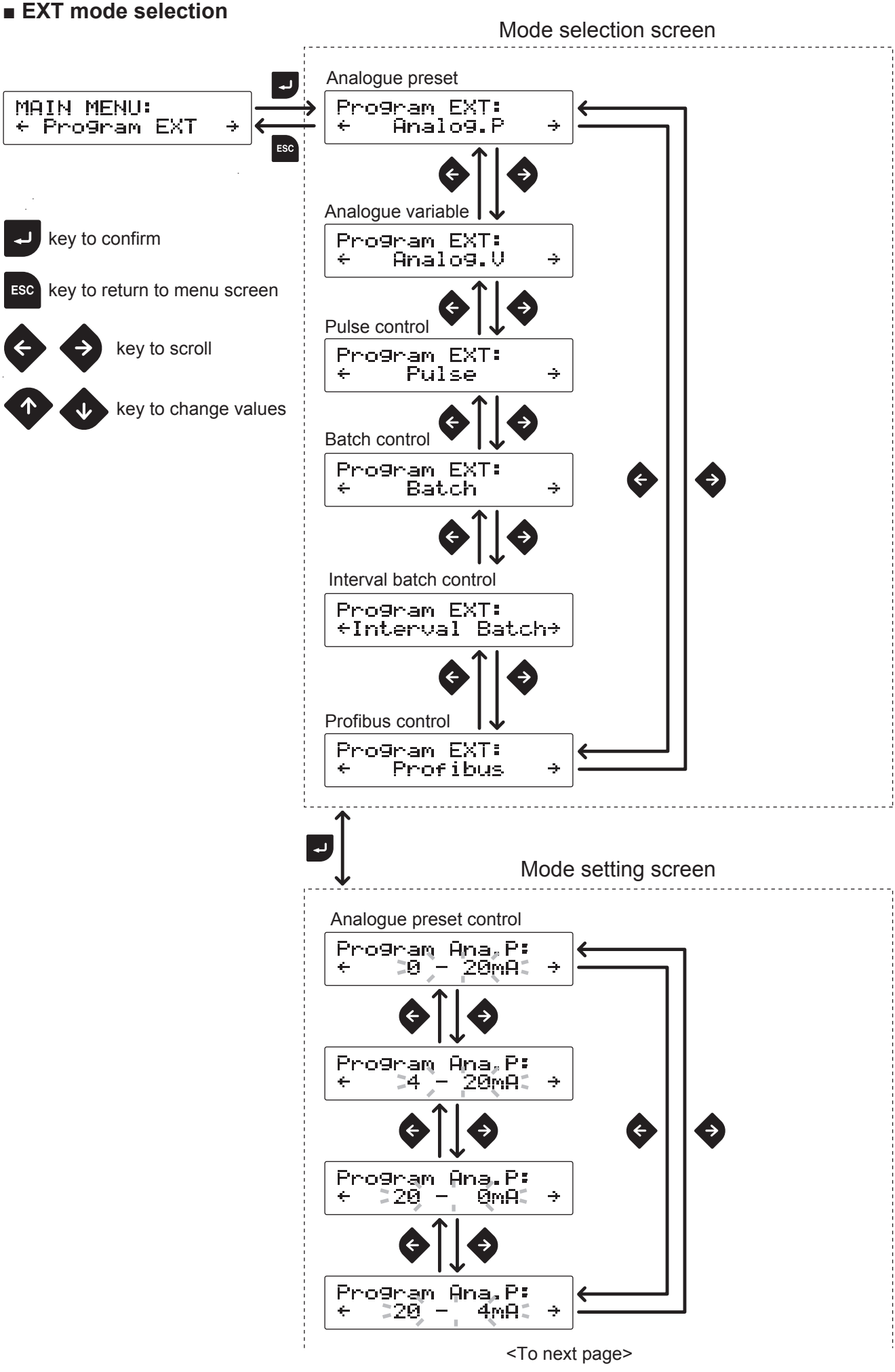

<To next page>

Analogue vairable control

SP1 current setting

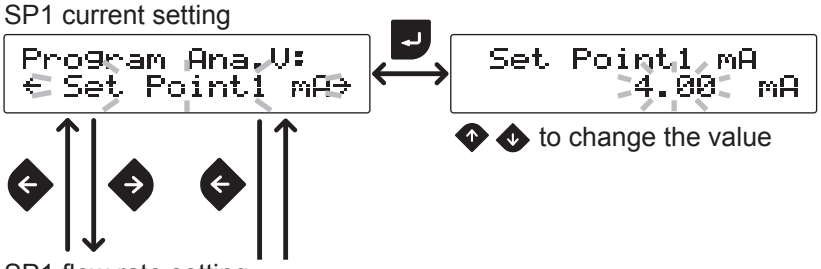

SP1 flow rate setting

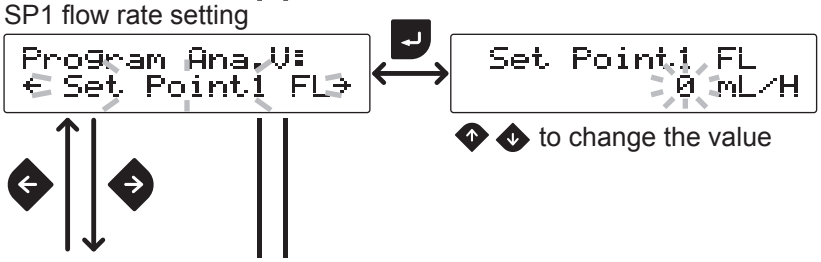

SP2 current setting

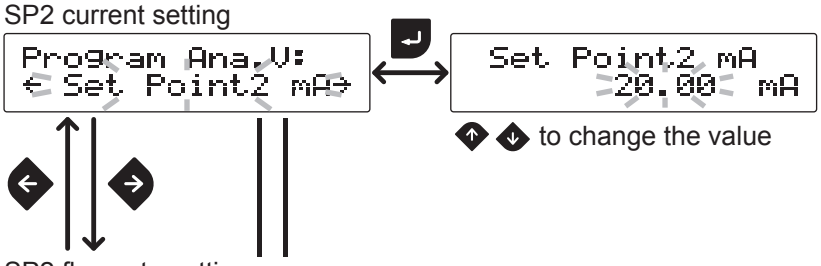

SP2 flow rate setting

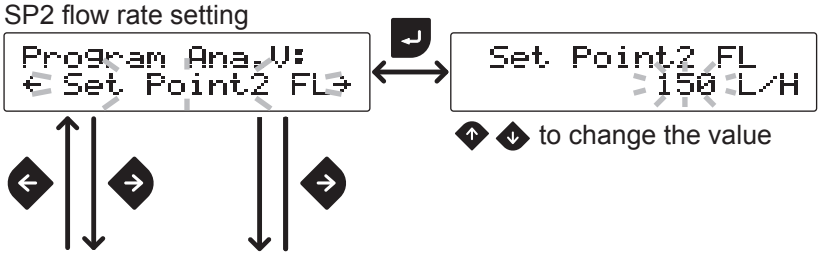

Behavioural pattern selection

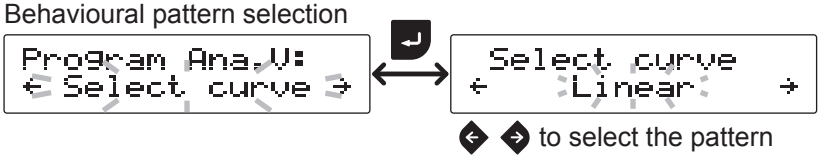

Pulse control

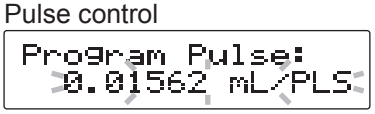

Set flow volume per pulse.

Batch control



Set flow volume per pulse.

<To next page>

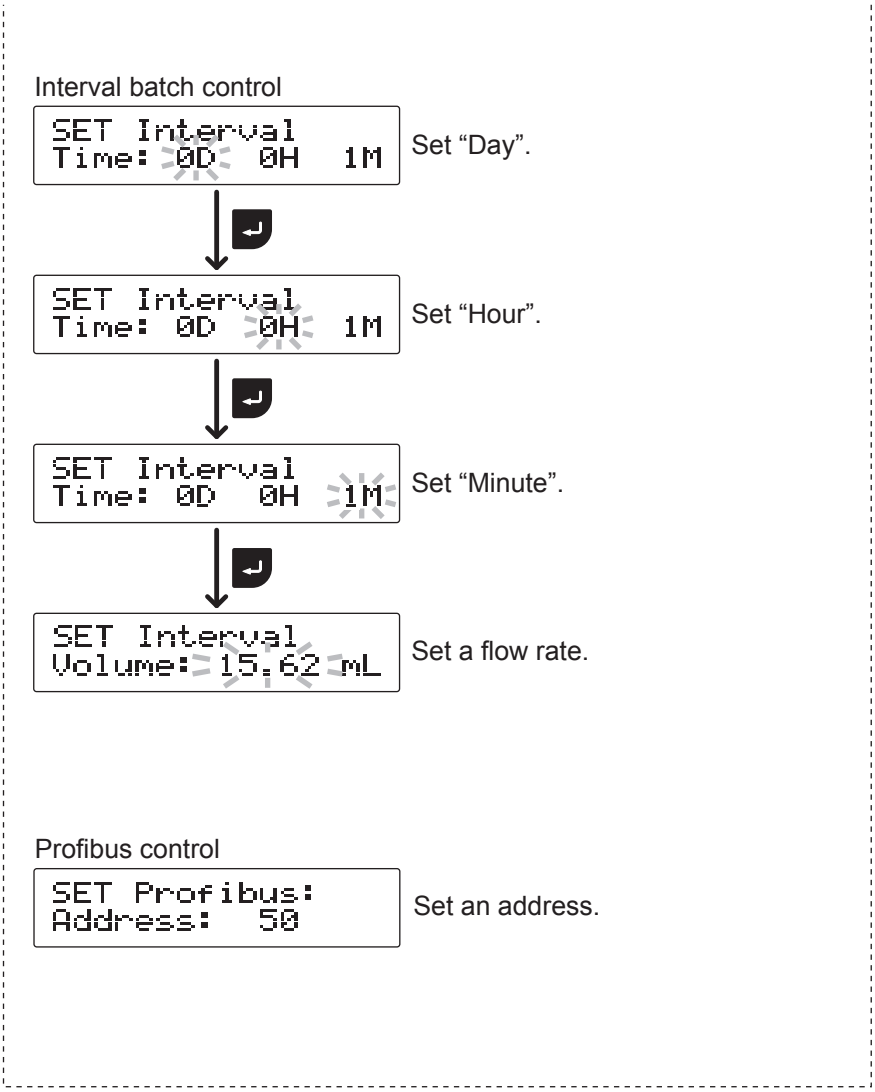

■ Calibration

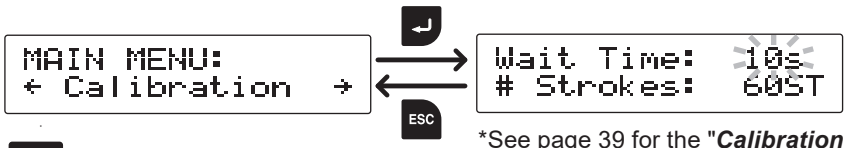

*See page 39 for the "***Calibration process"** section as well.

key to confirm

ESC key to return to menu screen

key to select

key to change values

■ Signal input setting

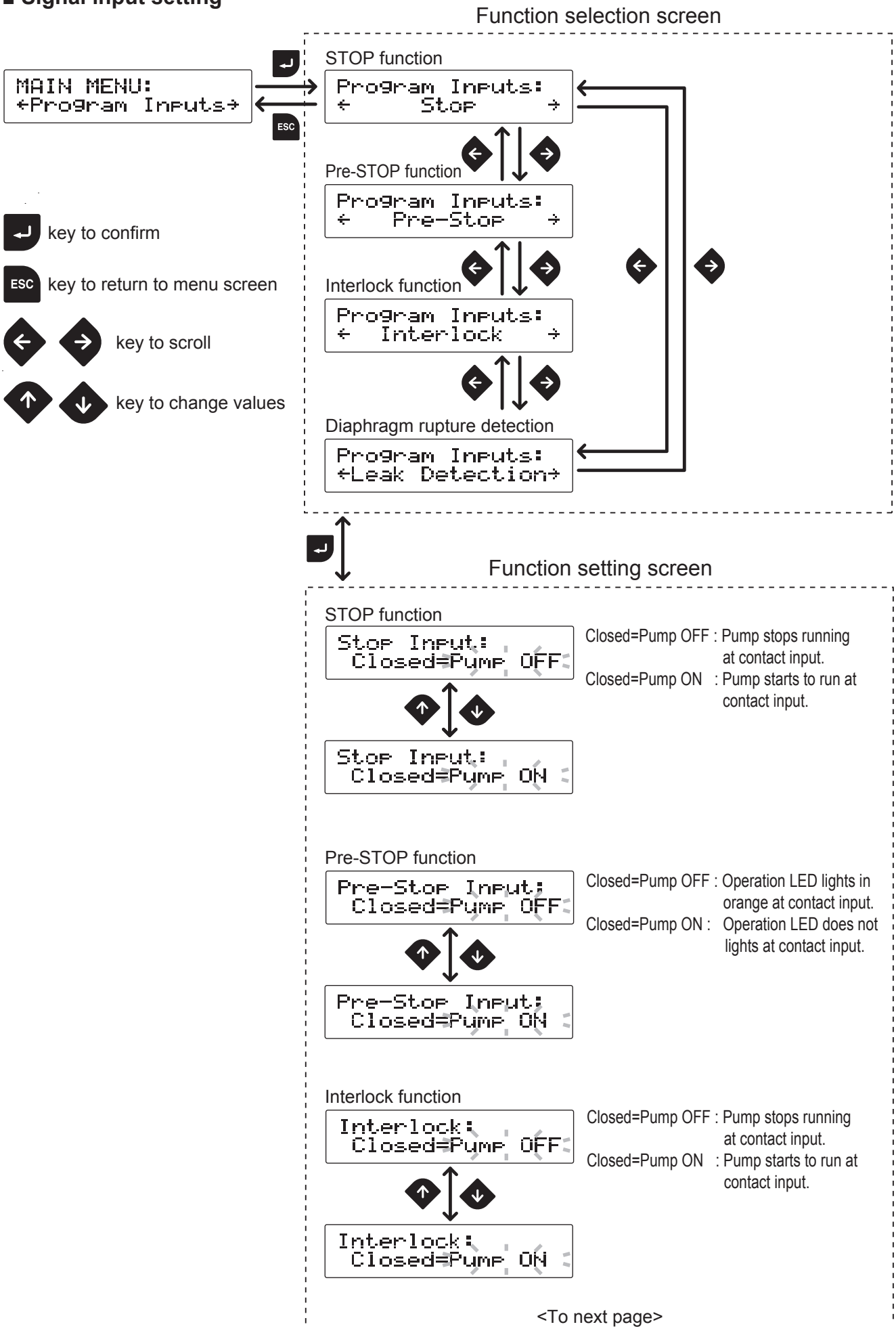

<To next page>

Diaphragm rupture detection

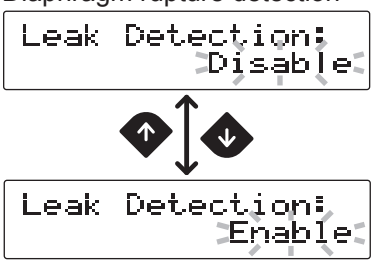

Disable : Rupture detection is not used.
Enable : Rupture detection is used.

■ Analogue output setting

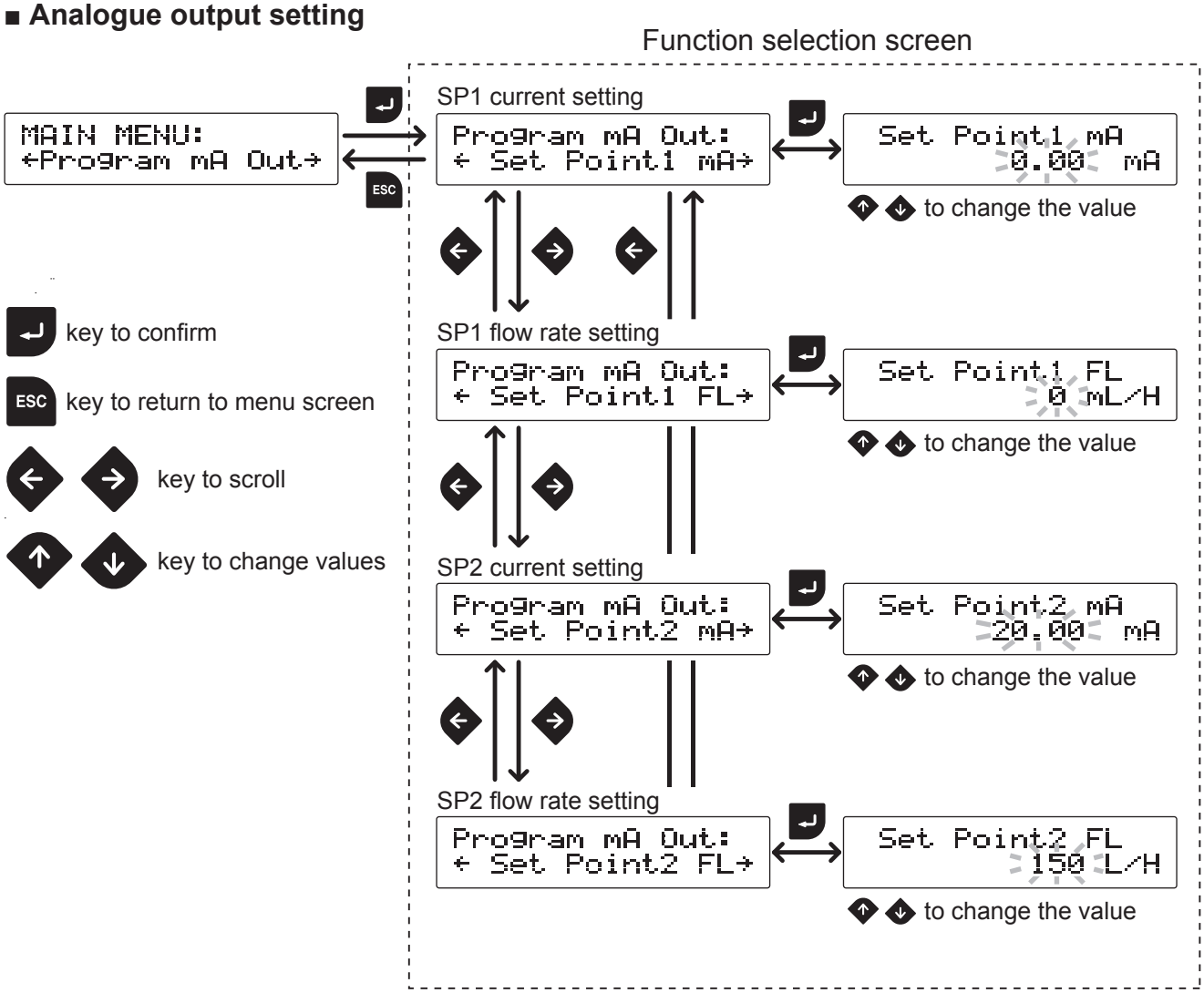

■ Alarm output setting (OUT 1) <Mechanical relay>

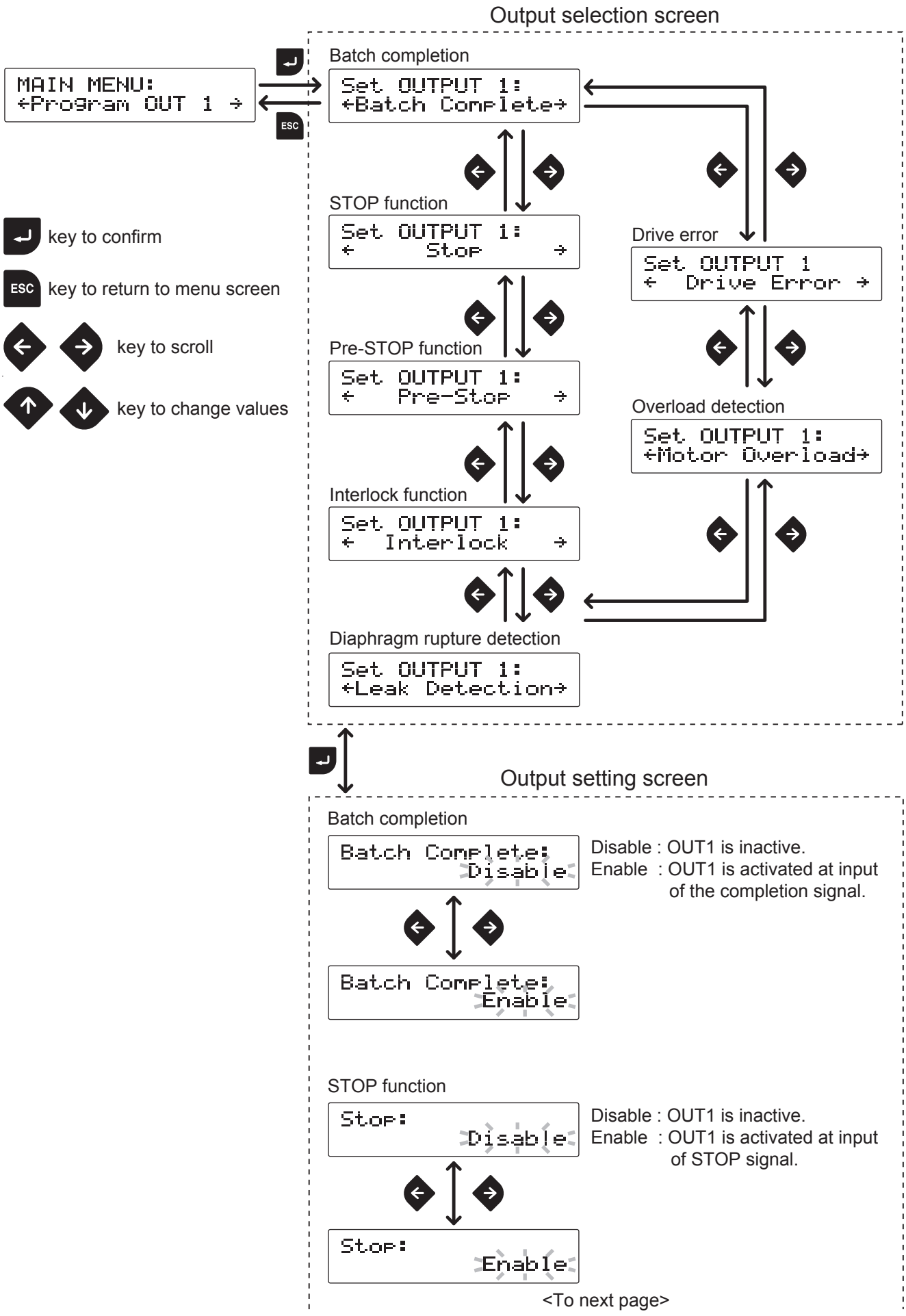

<To next page>

Pre-STOP function

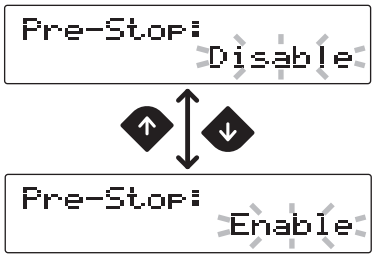

Disable : OUT1 is inactive.
Enable : OUT1 is activated at input of Pre-STOP signal.

Interlock function

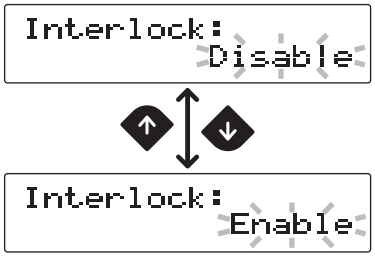

Disable : OUT1 is inactive.
Enable : OUT1 is activated at input of interlock signal.

Diaphragm rupture detection

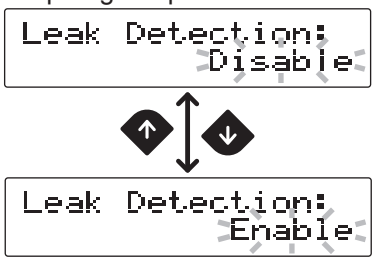

Disable : OUT1 is inactive.
Enable : OUT1 is activated at input of the detection signal.

Overload/Failed speed detection

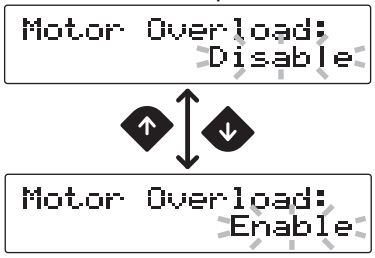

Disable : OUT1 is inactive.
Enable : OUT1 is activated at input of the detection signal.

Drive error detection

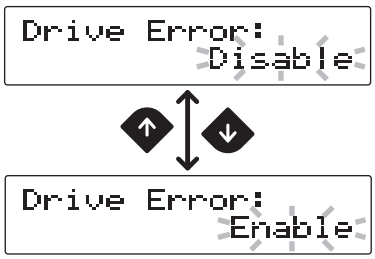

Disable : OUT1 is inactive.
Enable : OUT1 is activated at input of the detection signal.

■ Alarm output setting (OUT 2) <PhotoMOS relay>

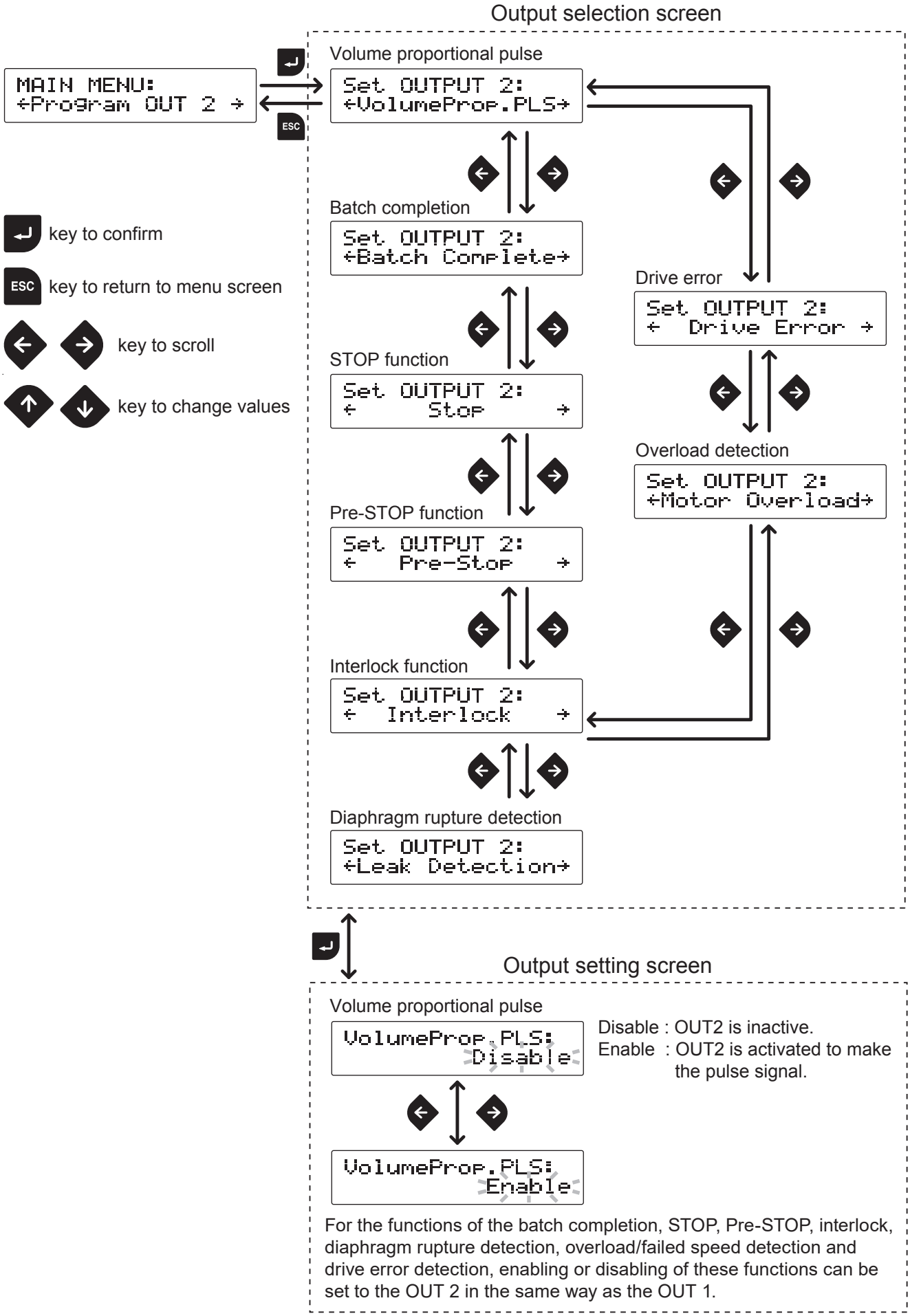

■ Data logging

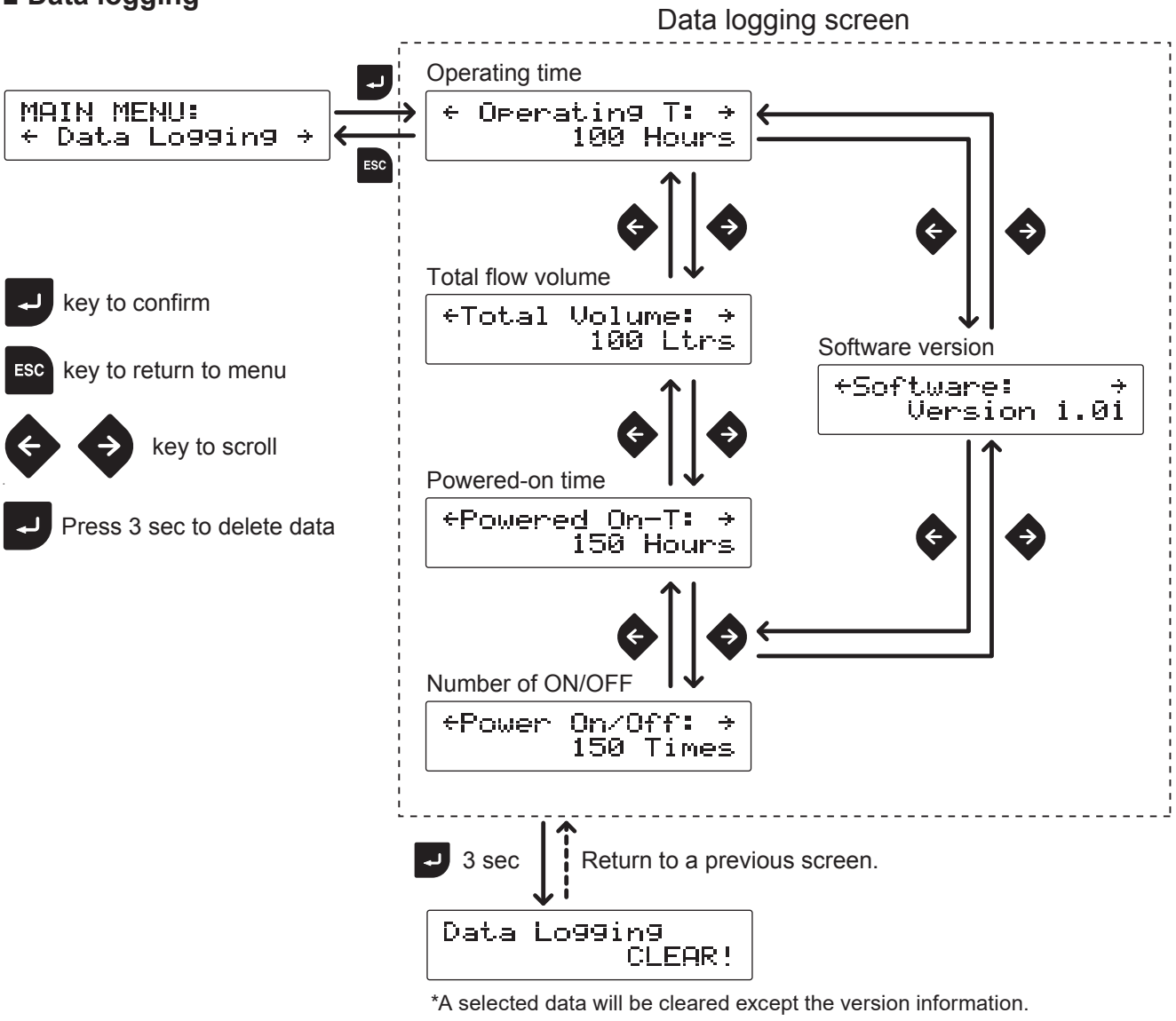

*A selected data will be cleared except the version information.

■ Programming of other functions

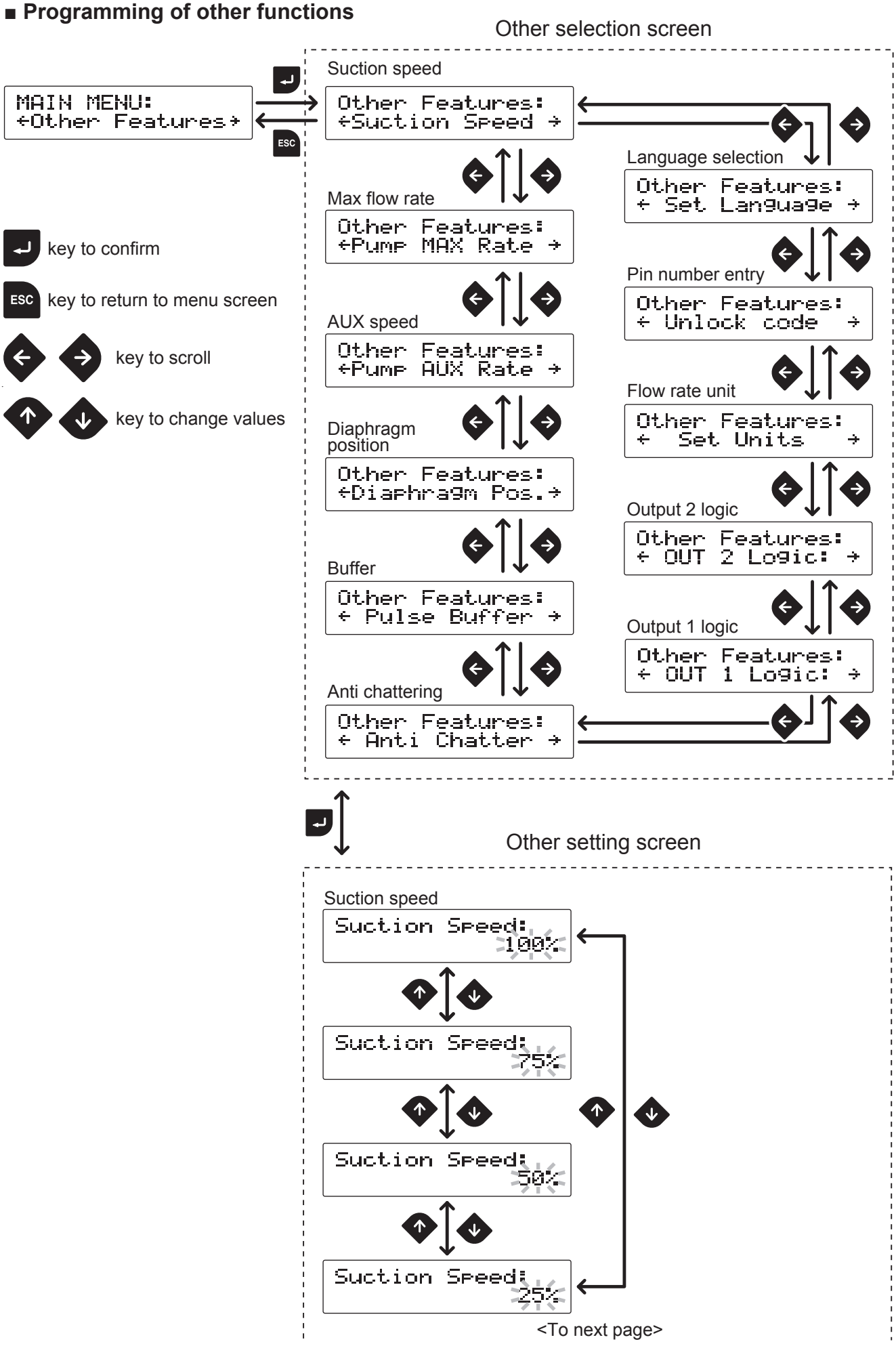

Max flow rate



Set a flow rate.

AUX speed



Set a flow rate.

Diaphragm position

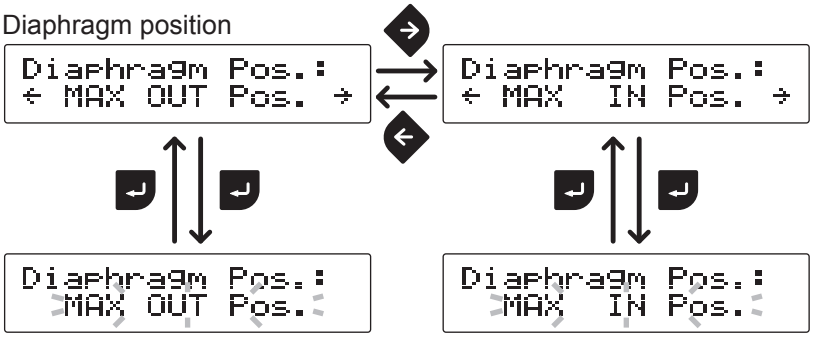

MAX OUT Pos. : The diaphragm comes to the top dead point.
MAX IN Pos. : The diaphragm comes to the bottom dead point.

*Either one of the above indication keeps flashing as long as the diaphragm is at either end. See page 65 for diaphragm replacement.

Buffer

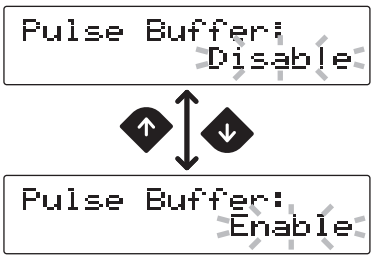

Disable : Buffer OFF

Enable : Buffer ON

Anti chattering

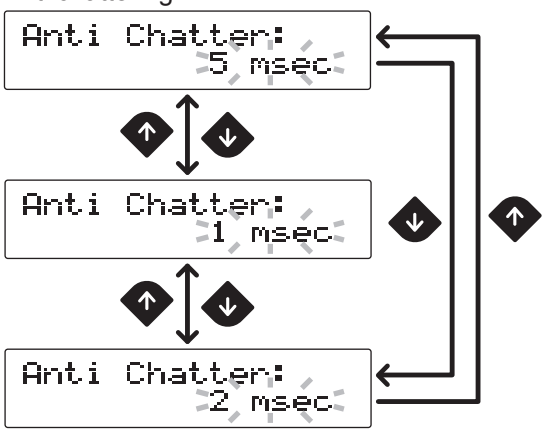

<To next page>

Output 1 logic

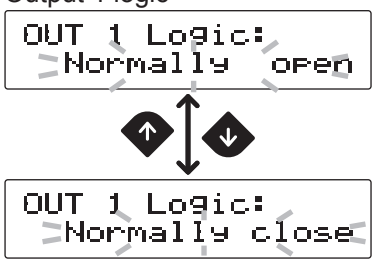

Set the output 2 logic as necessary.

Flow rate unit

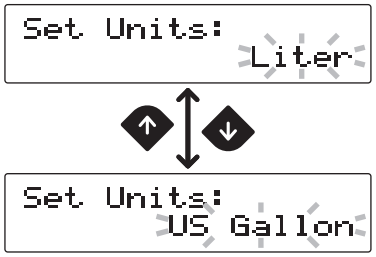

Pin number entry

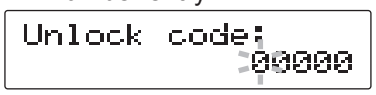

key to change values

key to move through each digit

key to confirm

Language selection

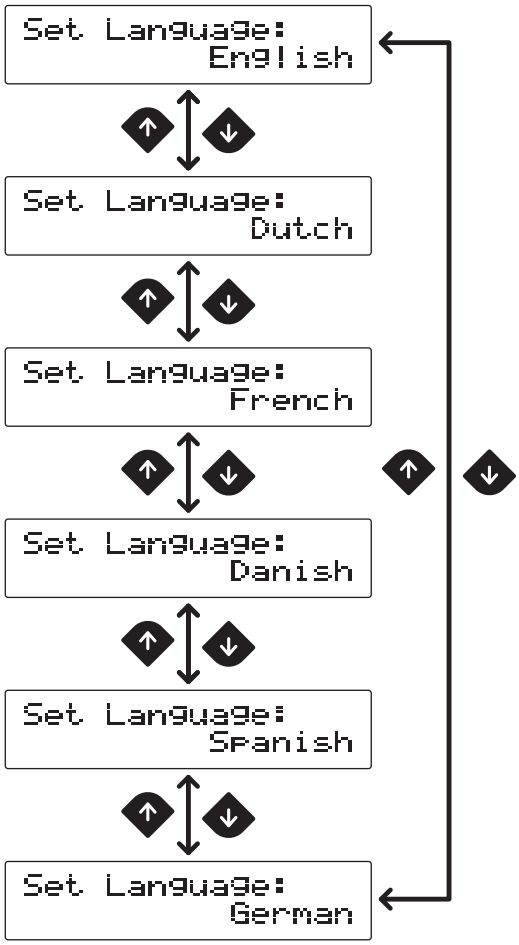

Operation

Read this section before operation.

Manual operation

Run or stop the pump by keypad operation.

1 Supply the rated power voltage to the pump.

The operation LED lights in red colour, and a previous mode at the last shutoff returns.

*The pump enters the MAN/EXT selection mode when the power is turned on with the factory default setting.

2 Push the ESC key to enter the MAN/EXT selection mode.

Push the start/stop key to stop operation if the IX is running in the previous mode.



3 Push the left key to select "MAN" and the Enter key to enter that choice.

The pump enters a waiting state. Use the UP and DOWN keys to set the flow rate.

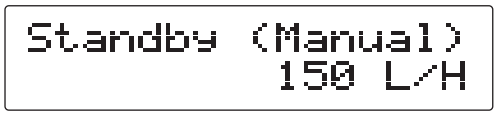

4 Push the start/stop key to start operation.

The operation LED lights in green colour during operation.



EXT operation

The pump operation is controlled with the external signal.

1 Supply the rated power voltage to the pump.

The operation LED lights in red colour, and a previous mode at the last shutoff returns.

*The pump enters the MAN/EXT selection mode when the power is turned on with the factory default setting.

2 Push the ESC key to enter MAN/EXT selection mode.

Push the start/stop key to stop operation if the IX is running in the previous mode.



3 Push the right key to select "EXT" and the Enter key to enter that choice.

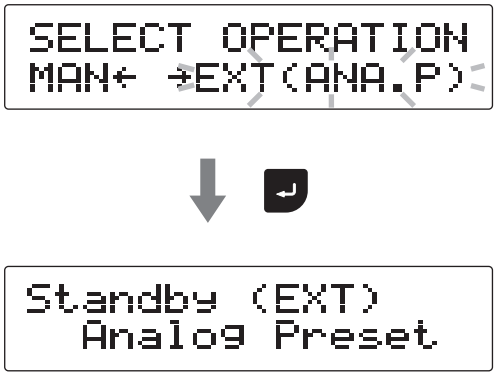

Waiting state display

*The pump enters the analogue preset, analogue variable, pulse, batch or interval batch mode.

4 Push the start/stop key to start operation. The pump runs along with operation programming and the external signal. Pushing the same key again stops operation.

In the analogue variable control mode, the current value will show up when the → key is pushed. Push the ← key to return.



The operation LED turns green during operation.

AUX function

Operation at an AUX speed starts while receiving the external signal via the AUX terminal when the IX is running in manual mode or EXT mode. Set an AUX speed before operation. See page 53 for detail.

Priming function

This key operation runs the pump at the preset maximum flow rate.

1 Press and hold both the UP and DOWN keys.

The pump runs at the preset maximum flow rate while both the keys are pressed.

*This function is available at any time except when the MAN/EXT selection or the menu screen is opened.



Keypad lock

Keypad lock can be active for the prevention of erroneous key operation.

NOTE

- Any key operation is not acceptable when the keypad lock is active. In an emergency, however, pressing the start/stop key for two seconds, the pump enters a wait state and stops running. Enter the PIN number to release this state before resuming operation.
- This function is available at any time except when the menu screen is opened.

■ Keypad lock activation

1 Press and hold both the right and left keys for 3 seconds.



"KEY LOCKED!" appears on the screen for one second.

*This indication comes up every time any key is pushed.

■ Keypad lock release

1 Push the ESC key.

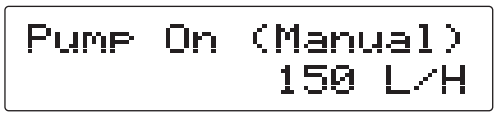

2 Enter the PIN number.

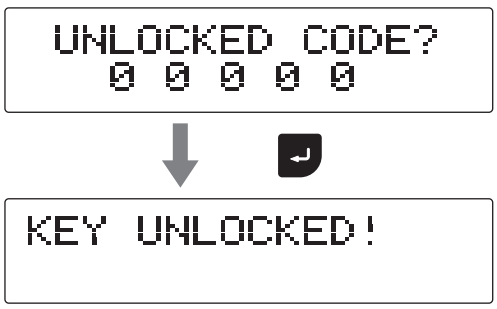

key to change value

key to move through each digit

■ Emergency stop

1 Press and hold the start/stop key for 2 seconds to stop the pump.

Release the keypad lock mode to resume operation.

Maintenance

This section describes troubleshooting, maintenance, wear part replacement, exploded views and specifications.

Points to be observed

Observe the following points during maintenance work:

- Observe instructions in this manual for maintenance, inspection, dismantlement and assembly. Do not dismantle the pump beyond the extent of the instructions.
- Always wear protective clothing such as an eye protection, chemical resistant gloves, a mask and a face shield during disassembly, assembly or maintenance work. The specific solution will dictate the degree of protection. Refer to SDS precautions from the solution supplier.
- Risk of electrical shock. Be sure to turn off power to stop the pump and related devices before service is performed.

Before unplugging the pump:

Always stop the pump by key operation and wait for three seconds, especially when disconnecting the pump from a piping system. Otherwise, the stop command may not be saved, and the pump may unintentionally start to run and deliver fluid into an imperfect piping system as it is powered on once again.

NOTE

- It's not the manufacture's responsibility for any failure due to corrosion or erosion occurred in your operating condition.
- Contact your distributor or a manufacturer of the host machine in which our product is built for repair.
- Be sure to drain chemicals and flush the inside of the pump before return so that a harmful chemical does not spill out in transit.

Troubleshooting

First check the following points. If the following measures do not help remove problems, contact your nearest distributor.

■ Pump

States	Possible causes	Solutions
The pump does not run (the operation LED does not light or the screen is blank.).	Power voltage is too low.	• Observe the allowable voltage range of 90-264VAC.
	The pump is not powered.	• Check the pump is switched on. • Correct wiring. • Replace a breaking wire to new one.
Liquid can not be pumped up.	Air lock in the pump	• Expel air. See page 37.
	Air ingress through a suction line	• Check for the ingression point and fix/re-route the suction line as necessary.
	An O ring is not fitted to a valve set.	• Fit O ring to the valve set.
	Foreign matters are stuck in the pump head valves.	• Dismantle, inspect and clean the valves. Replace as necessary.
	A valve ball is stuck on a valve seat.	• Dismantle, inspect and clean the valve. Replace as necessary.
	A vale seat has been pressed in the valve guide.	• Do not push the valve seat into the valve guide. See page 65.
A flow rate fluctuates.	Air trapped in the pump head.	• Expel air. See page 37.
	Overfeeding occurs.	• Mount a back pressure valve to keep the discharge line pressure constant.
	Foreign matters are stuck in the pump head valves.	• Dismantle, inspect and clean the valves. Replace as necessary.
	Diaphragm is broken.	• Replace the diaphragm. See page 65.
	Pressure fluctuates at an injection point.	• Maintain the pressure constant by optimizing piping or by relocating the injection point.
Liquid leaks.	A fitting is loose.	• Tighten the nut to fix the fitting.
	Loose fit of the pump head	• Retighten the pump head. See page 36.
	An O ring is not fitted to a valve set.	• Fit O ring to the valve set. See page 65.
	Diaphragm is broken. A leak from the drain port (vent hole)	• Replace the diaphragm. See page 65.

Error messages

Take measures below when any of the error messages appears during operation. Contact us or your nearest distributor as necessary.

Error messages	Possible causes	Measures
MOTOR OVERLOAD! S/S Key = Clear	Pressure overload protection is active.	• Check a discharge line for clogging and remove it as necessary. If this error happens during the transfer of high viscosity liquid, make a discharge line I.D. wider and its length shorter.
LEAK DETECTED! S/S Key = Clear	Diaphragm is broken.	• Replace the broken diaphragm with new one. See page 65 for detail.
DRIVE ERROR! S/S Key = Clear	Failed rotation control is detected.	• If this error state is removed by pushing the start/stop key, a possible cause is an instantaneous surge of discharge line pressure. Inspect/solve the problem and then restart. • If not, failure of a motor rotation detector is possible. Contact us or your nearest distributor.

Inspection

Perform daily and periodic inspection to keep the best pump performance and safety.

Daily inspection

Check the following points. If you notice any abnormal or dangerous conditions, suspend operation immediately and inspect/solve problems. See the "Troubleshooting" section as necessary.
When wear parts come to the life limit, replace them with new ones. Contact your distributor for detail.

No.	States	Points to be checked	How to check
1	Pumping	• If liquid is pumped.	Flow meter, pressure gauge or visual inspection
		• If discharge pressure is normal.	Pressure gauge
		• If liquid is deteriorated, crystallized or settled.	Visual or audio inspection
2	Noise and vibration	• If abnormal noise or vibration occurs. They are signs of abnormal operation.	Visual or audio inspection
3	Air ingress from the pump head joints and the suction line	• If pumped liquid includes air bubbles, check the line for leakage and loose connection and retighten as necessary.	Visual or audio inspection

Periodic inspection

Retighten the pump head mounting bolts evenly to the following torque in diagonal order.

*Mounting bolts may loosen in operation. How fast the bolts start to loosen is depending on operating conditions.

Tightening torque

Model code	Torque	Bolts	Number of bolts
IX-C150	12 N•m	M8 hexagon head bolt	8
IX-C060	3.5 N•m	M5 hexagon head bolt	6

Wear part replacement

To run the pump for a long period, wear parts need to be replaced periodically.
It is recommended that the following parts are always stocked for immediate replacement.
Contact your nearest distributor for detail.

Precautions

- Solution in the discharge line may be under pressure. Release the pressure from the discharge line before disconnecting plumbing or disassembly of the pump to avoid solution spray.
- Rinse wet ends thoroughly with tap water.
- Every time the pump head is dismantled, replace the diaphragm and the valve sets with new ones.

Wear part list

Pump head	Parts		# of parts	Estimated life
C150	Inlet/outlet valve set (TC type)	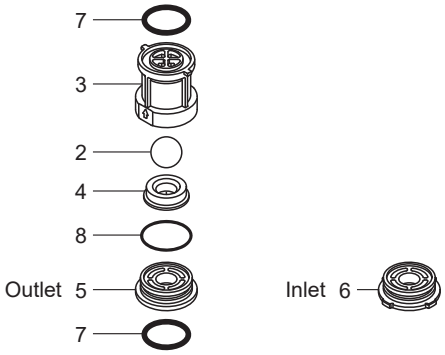	2 sets	8000 hours
	Inlet/outlet valve set (TE type)	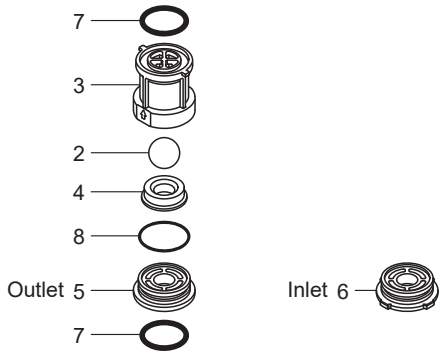	2 sets	8000 hours
	Valve set (S6 type)	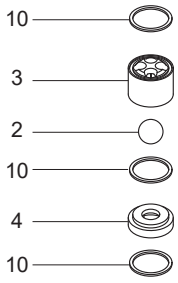	2 sets	8000 hours
	Diaphragm	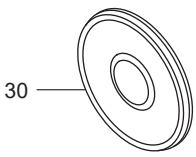	1	4000 hours

Pump head	Parts		# of parts	Estimated life
C150	Retainer		1	8000 hours
C060	Valve set (TC type)	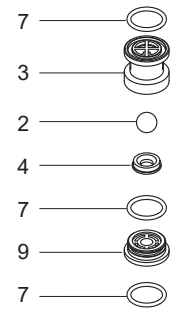	2 sets	8000 hours
	Valve set (TE type)	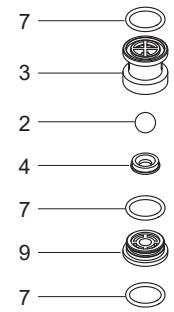	2 sets	8000 hours
	Valve set (S6 type)	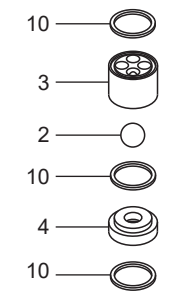	2 sets	8000 hours
	Diaphragm	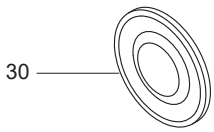	1	4000 hours
	Retainer		1	8000 hours

*Wear part duration varies with the pressure, temperature and characteristics of liquid.
*The estimated life is calculated based on pumping clean water at ambient temperature.

Before replacement

1 Stop the pump operation.

2 Close the suction line.

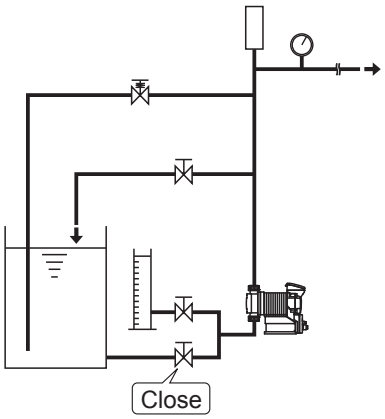

3 Open the drain valve to release liquid out of the discharge line.

NOTE

Open the valve gradually. Chemicals may be purged if the discharge line pressure maintains the higher pressure than the atmospheric pressure.

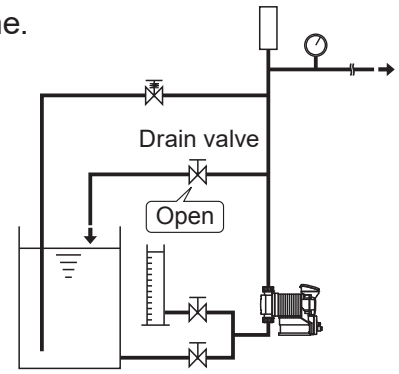

Valve set replacement

1 Remove pipes from the pump.

NOTE

- Be careful not to get wet with residual chemicals in piping.
- Rinse chemicals or crystals off the parts as necessary.
- Use care handling the valve set. Do not drop it especially when the suction pipe is removed from the pump inlet.
- Remove the IX-C060 TC/TE nuts while holding the adapter with a spanner.

IX-C150 TC/TE

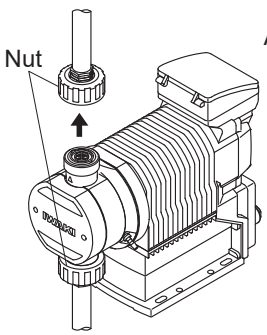

IX-C060 TC/TE

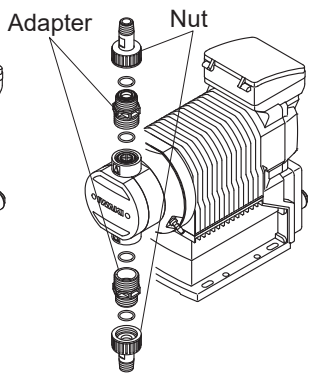

IX-C150 S6

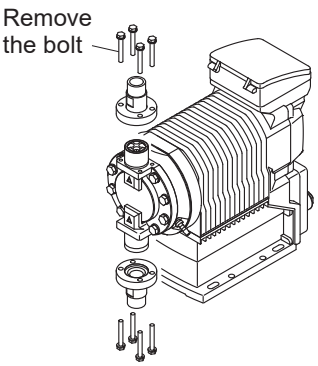

IX-C060 S6

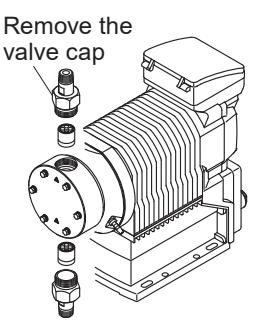

2 Take out valve sets from the pump head and take them apart to replace worn parts as necessary.

Clean the pump head as necessary.

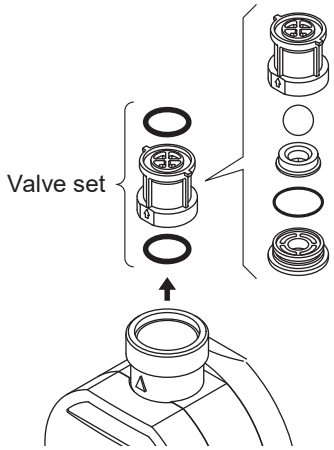

3 Reassemble and remount the valve sets in the pump head.

Observe the mounting order and direction of valve set components. See the exploded view at each model.

NOTE

- Observe the mounting direction of the valve set.
- The valve seat must be held in the valve guide by the seat holder when assembling an IX-C060 TC/TE valve set. Do not push the valve seat down into the valve guide. Otherwise, a leak may result.

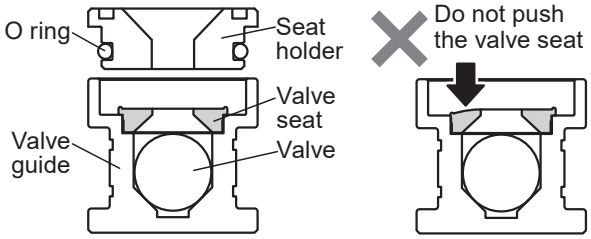

4 Connect pipes and the pump.

Diaphragm replacement

Necessary tools

• 3mm hexagon wrench • Spanner (C150:13mm / C060:8mm) • Torque wrench

1 Remove pipes from the pump.

NOTE

- Use care handling the valve set. Do not drop it especially when the suction pipe is removed from the pump inlet.
- Be careful not to get wet with residual chemicals in the pump head or the discharge pipe.

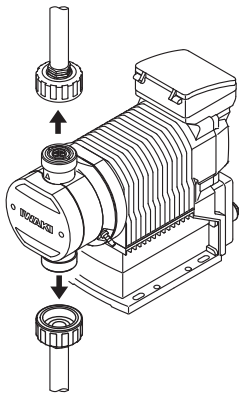

2 Remove the bolt cover with a 3mm hexagon wrench (TC/TE types).

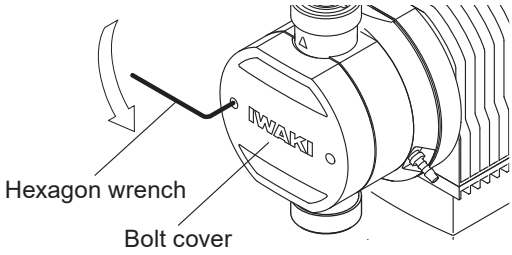

3 Use a 13mm spanner to remove the six M8 bolts and detach the pump head with a reinforcing plate.

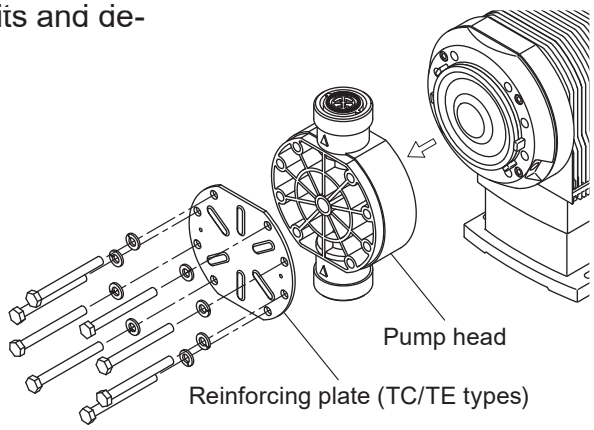

4 Extend the pump shaft by keypad operation.

*With the diaphragm rupture detection ON and the error message of "LEAK DETECTED!", the diaphragm has been fully extended. In this instance, skip to the next step.

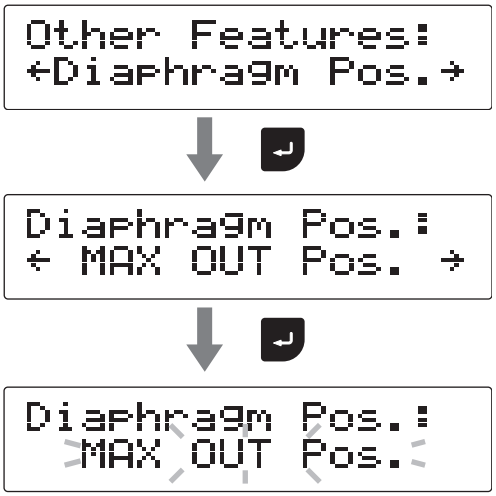

Select "Diaphragm Pos." through the menu screen and push the Enter key. See page 53 for detail.

Select "MAX OUT Pos." with the right and left keys and push the Enter key.

The diaphragm extends to the maximum and "MAX OUT Pos." blinks on the screen.

5 Rotate and remove the diaphragm and the retainer.

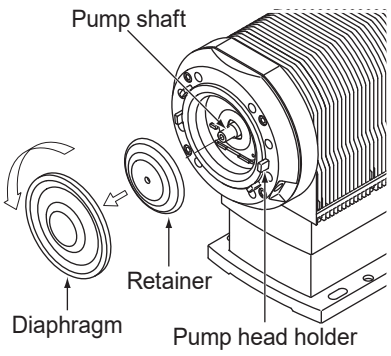

6 Clean the retainer or replace it with a new one. Apply the grease (Dow Corning Toray MOLYKOTE® HP-500) on its surface and the screw burning protective agent to the shaft of a new diaphragm.

7 Fit a new diaphragm and the retainer into the pump shaft.

Slide the retainer, dome end first, onto the diaphragm shaft. And then screw the shaft into the pump shaft and tighten it until bottoms out and will not turn further.

NOTE

If it is fitted loose, failure may result.

8 Retract the pump shaft by keypad operation.

Diaphragm Pos.: MAX OUT Pos.	Push the Enter key.
Other Features: ←Diaphragm Pos.→	Select "Diaphragm Pos." and push the Enter key.
Diaphragm Pos.: ← MAX OUT Pos. →	Select "MAX IN Pos." with the right and left keys.
Diaphragm Pos.: ← MAX IN Pos. →	Push the Enter key.
Diaphragm Pos.: MAX IN Pos.	The diaphragm contracts and "MAX IN Pos." flashes.

9 Mount the pump head.

Tighten the bolts evenly to 12N•m for the C150 or 3.5N•m for the C060 in diagonal order.

NOTE

Check the pump shaft has contracted to the full before mounting the pump head, or a leak or damage may result.

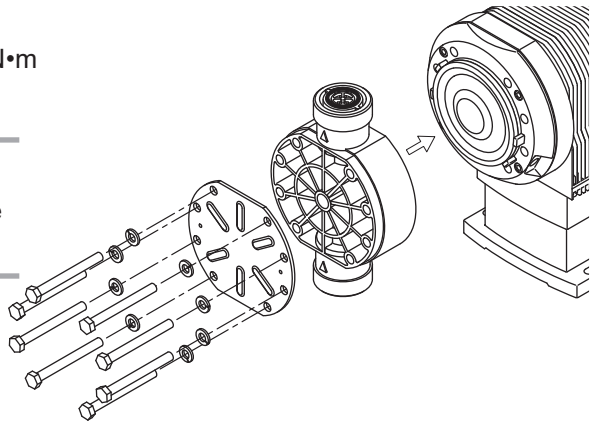

10 Fix the bolt cover with the hexagon wrench (TC/TE types).

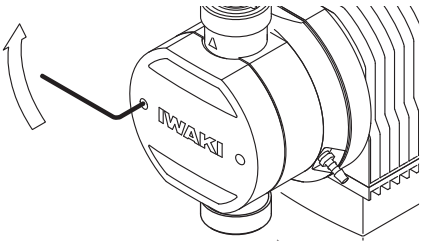

11 Connect pipes to the fittings and then tighten the nuts.

NOTE

Check if the valve set mounting direction is correct. Both the valve sets must be oriented to the same direction.

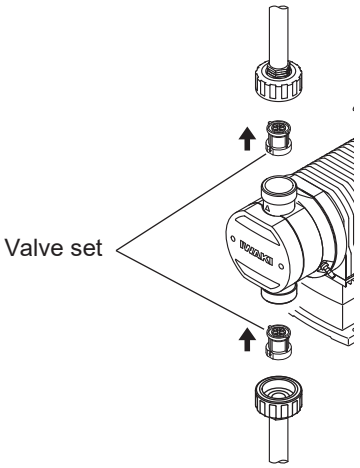

12 Go back to the waiting state.



Push the Enter key once to shift to the left display.

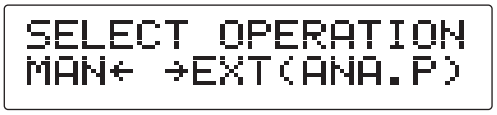

Push the start/stop key to return to the MAN/EXT selection.

Exploded view

Pump head, Drive unit & Control unit

Do not dismantle the pump beyond the extent shown in the diagram below.

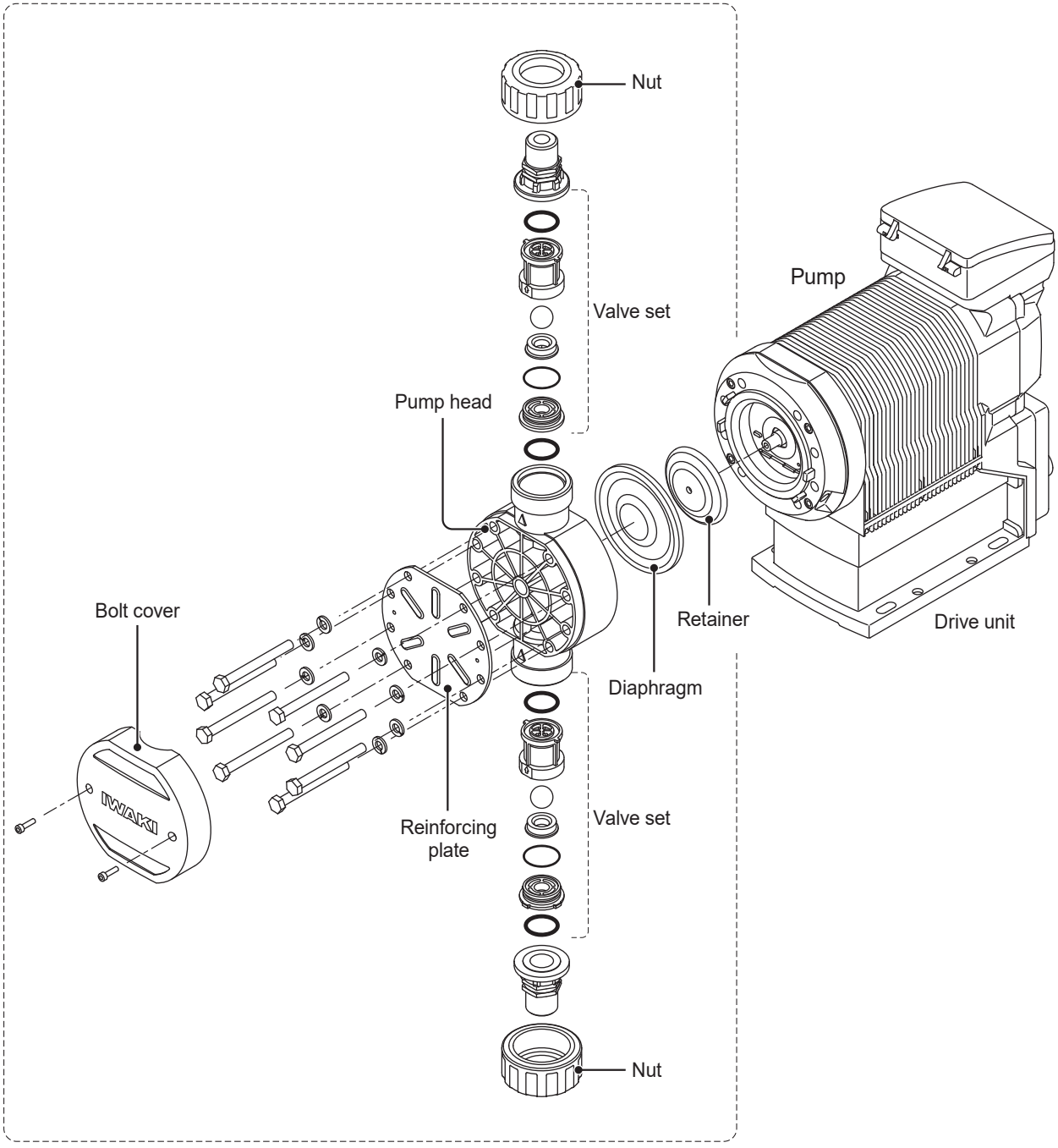

Pump head

*Pump head material and size differ with models.

Pump head

■ IX-C150 TC R

No.	Part names	# of parts
1	Pump head	1
2	Valve	2
3	Valve guide	2
4	Valve seat	2
5	Out seat holder	1
6	In seat holder	1
7	O ring	4
8	O ring	2
19	Hex socket head bolt	2
20	Hexagon head bolt	8
21	Spring washer	8
28	Bolt cover	1
29	Reinforcing plate	1
30	Diaphragm	1
31	Retainer plate	1
50	Nut	2
73	Fitting	2

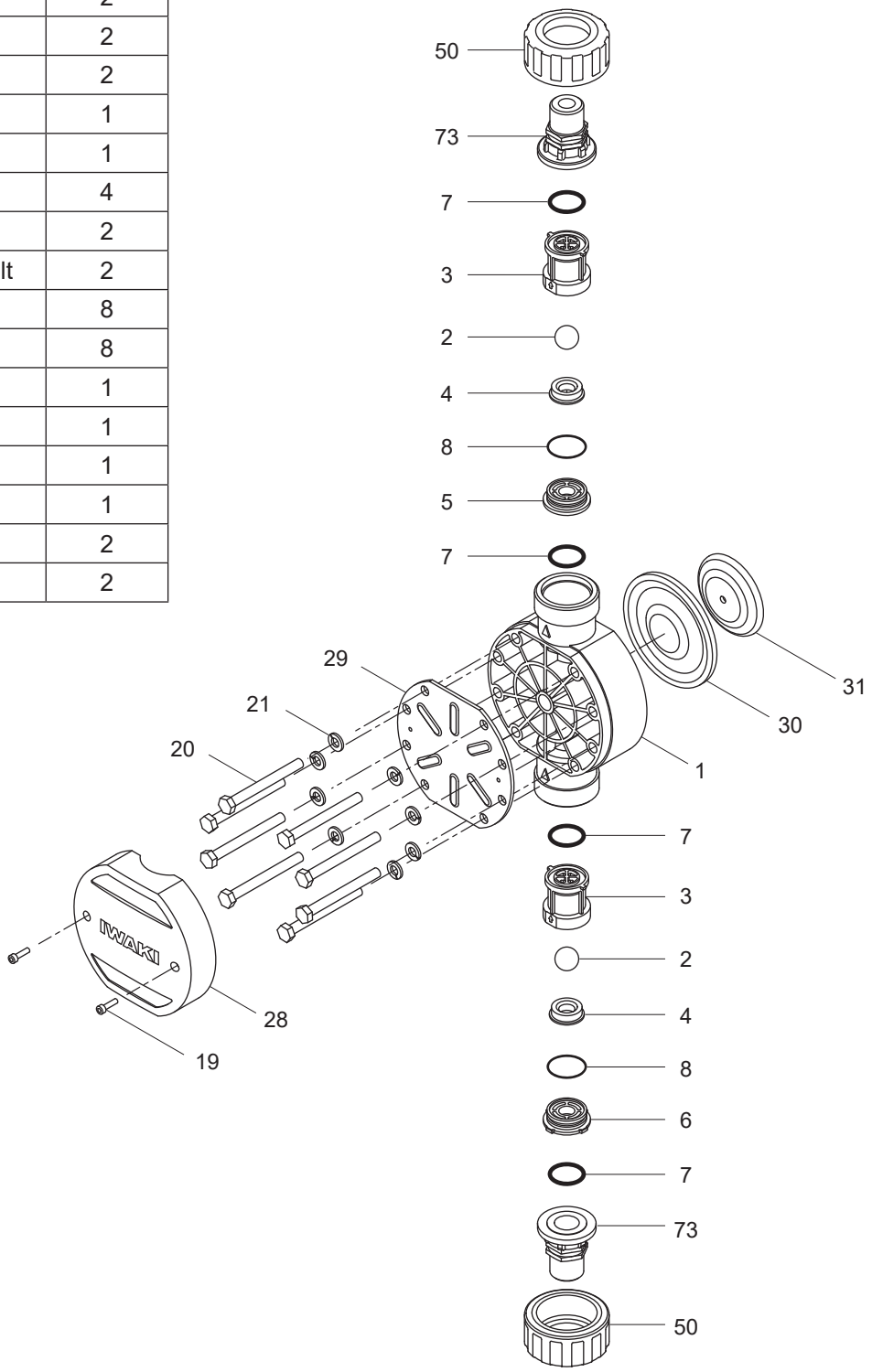

■ IX-C150 TC FJ

No.	Part names	# of parts
1	Pump head	1
2	Valve	2
3	Valve guide	2
4	Valve seat	2
5	Out seat holder	1
6	In seat holder	1
7	O ring	4
8	O ring	2
19	Hex socket head bolt	2
20	Hexagon head bolt	8
21	Spring washer	8
28	Bolt cover	1
29	Reinforcing plate	1
30	Diaphragm	1
31	Retainer plate	1
45	Flange unit	2

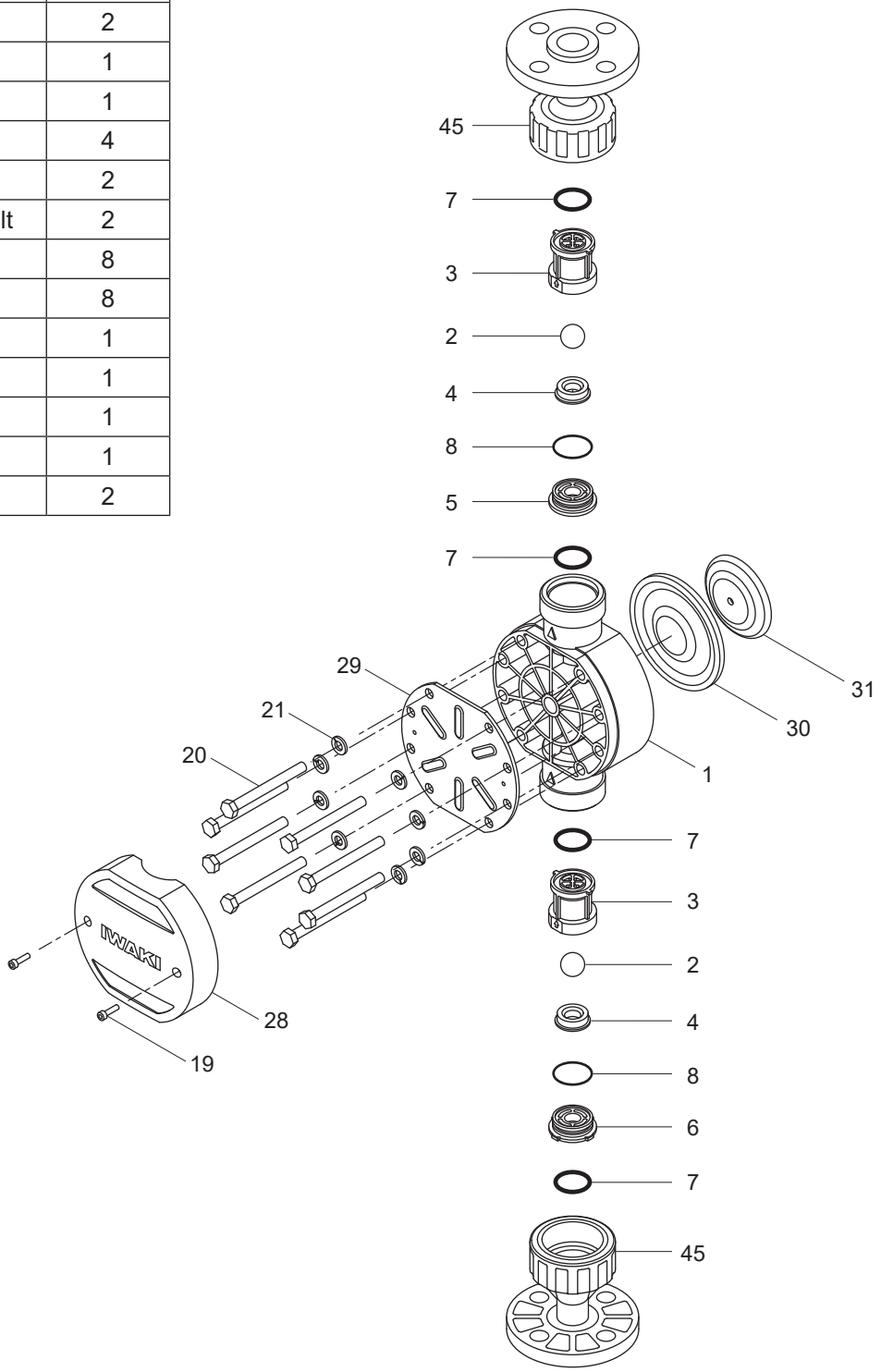

■ IX-C150 S6 R

No.	Part names	# of parts
1	Pump head	1
2	Valve	2
3	Valve guide	2
4	Valve seat	2
10	Valve gasket	6
20	Hexagon head bolt	8
21	Spring washer	8
30	Diaphragm	1
31	Retainer plate	1
55	Setting flange	2
73	Fitting	2
83	Hexagon head bolt	8

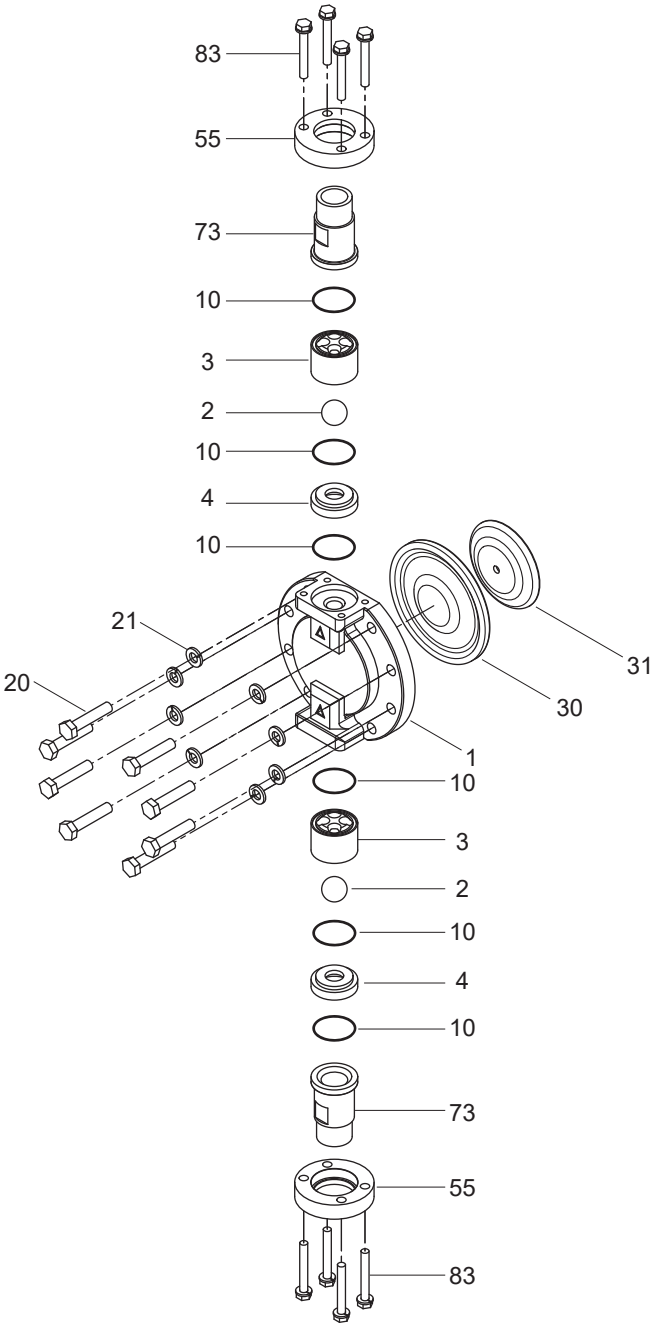

■ IX-C150 S6 FJ

No.	Part names	# of parts
1	Pump head	1
2	Valve	2
3	Valve guide	2
4	Valve seat	2
10	Valve gasket	6
20	Hexagon head bolt	8
21	Spring washer	8
30	Diaphragm	1
31	Retainer plate	1
45	Flange unit	2
83	Hexagon head bolt	8

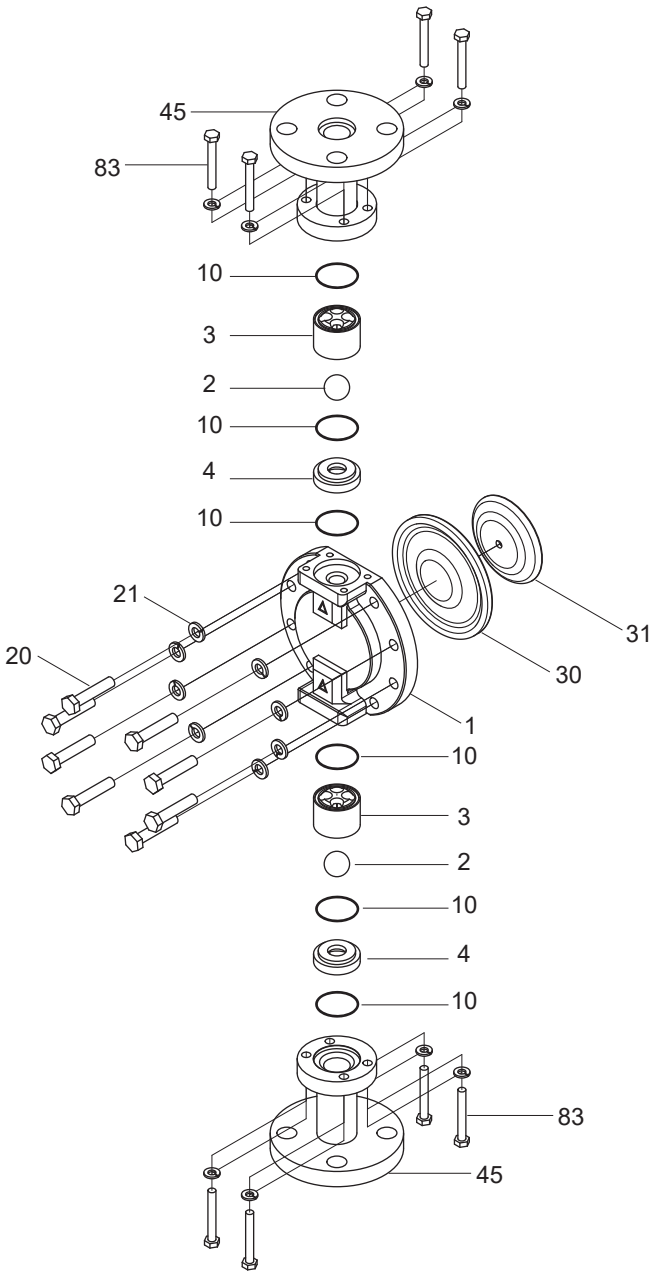

■ IX-C060 TC R

No.	Part names	# of parts
1	Pump head	1
2	Valve	2
3	Valve guide	2
4	Valve seat	2
7	O ring	8
9	Seat holder	2
16	Adapter	2
19	Hex socket head bolt	2
20	Hexagon head bolt	6
21	Spring washer	6
22	Plain washer	6
28	Bolt cover	1
29	Reinforcing plate	1
30	Diaphragm	1
31	Retainer plate	1
50	Nut	2
73	Fitting	2

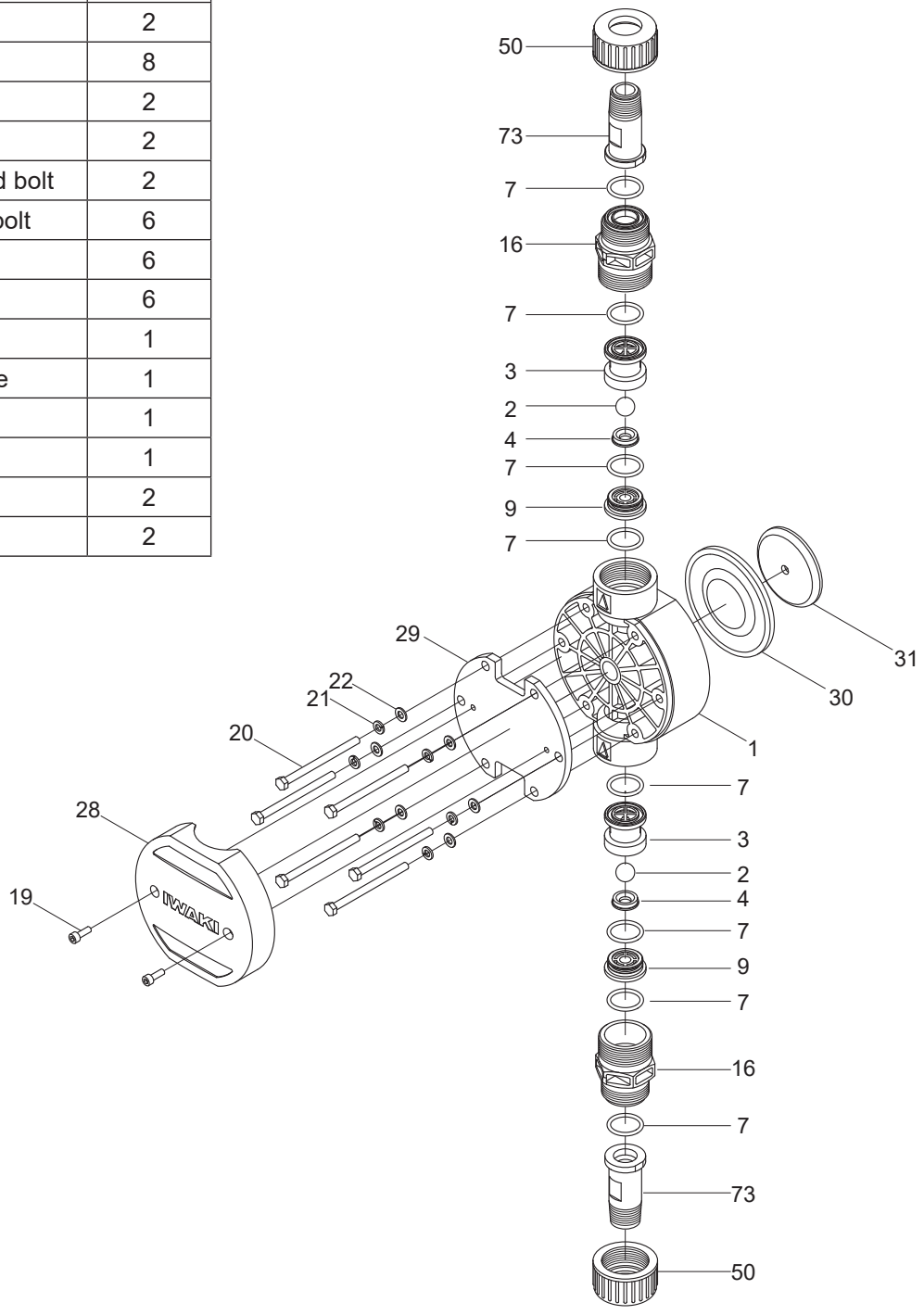

■ IX-C060 TC FJ

No.	Part names	# of parts
1	Pump head	1
2	Valve	2
3	Valve guide	2
4	Valve seat	2
7	O ring	8
9	Seat holder	2
16	Adapter	2
19	Hex socket head bolt	2
20	Hexagon head bolt	6
21	Spring washer	6
22	Plain washer	6
28	Bolt cover	1
29	Reinforcing plate	1
30	Diaphragm	1
31	Retainer plate	1
45	Flange unit	2

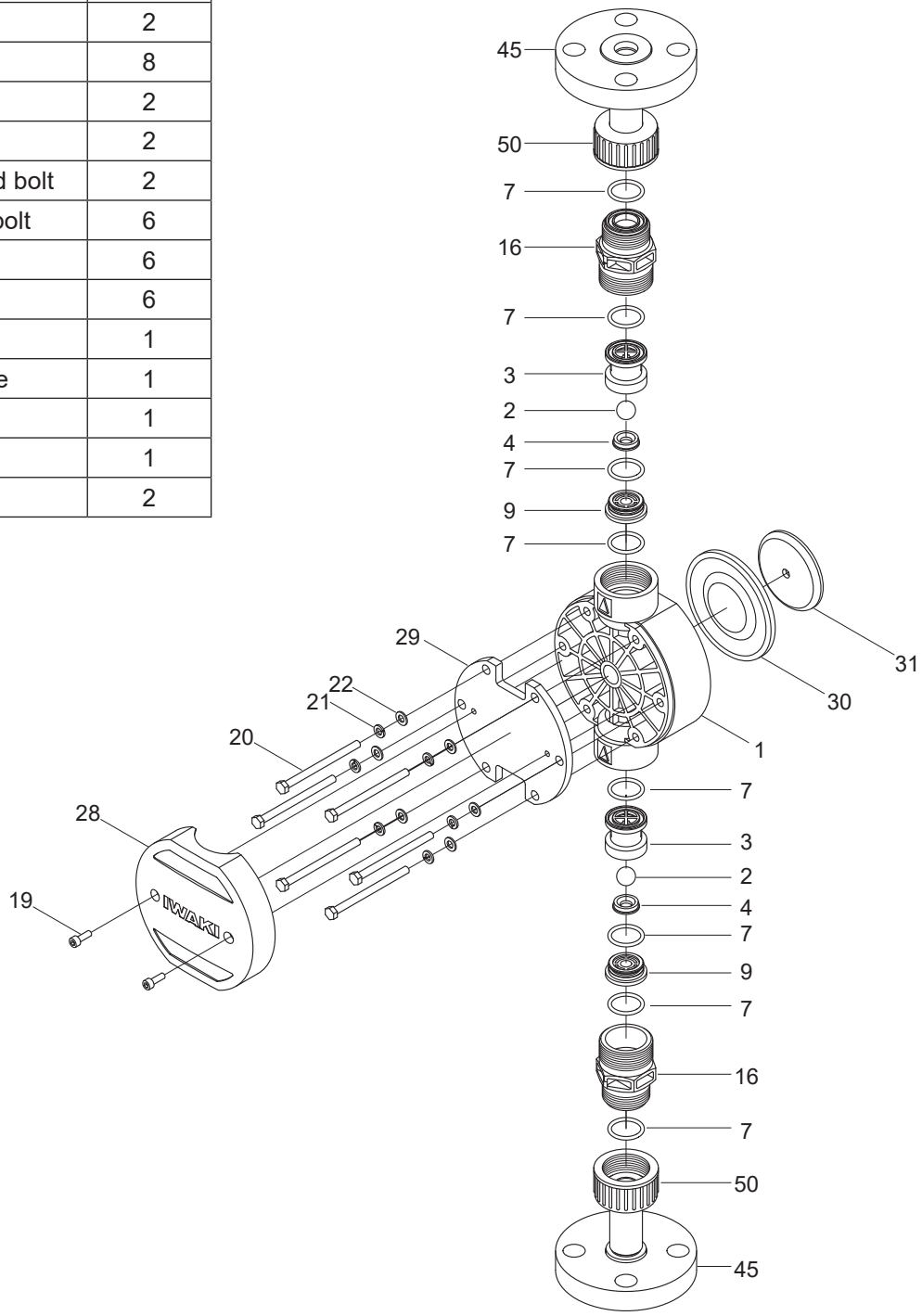

■ IX-C060 S6 R

No.	Part names	# of parts
1	Pump head	1
2	Valve	2
3	Valve guide	2
4	Valve seat	2
10	Valve gasket	6
13	Valve cap	2
20	Hexagon head bolt	6
21	Spring washer	6
22	Plain washer	6
30	Diaphragm	1
31	Retainer plate	1
73	Fitting	2

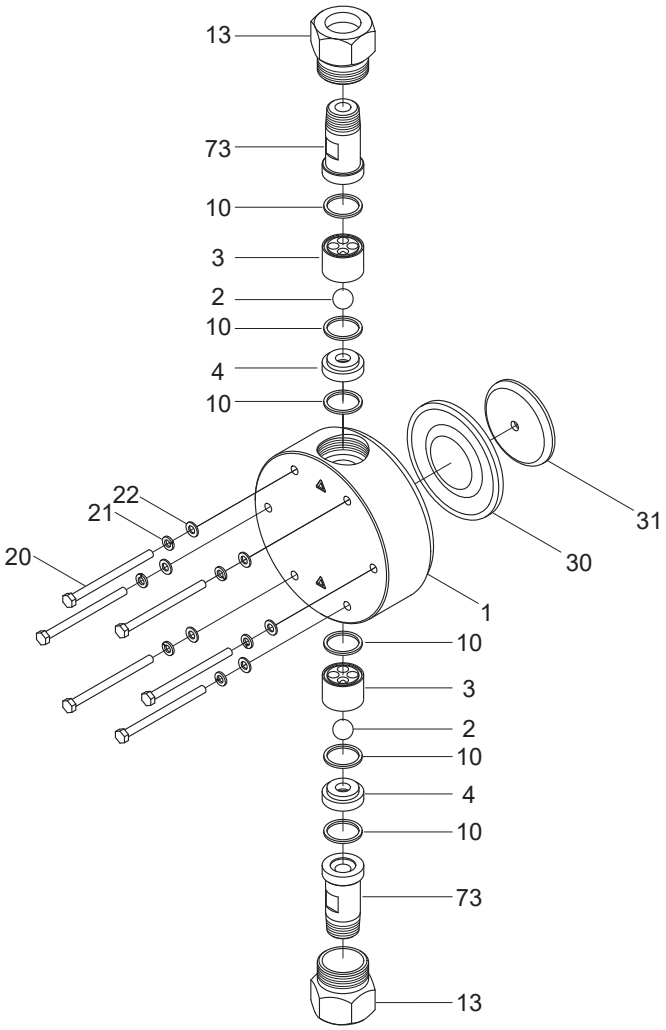

■ IX-C060 S6 FJ

No.	Part names	# of parts
1	Pump head	1
2	Valve	2
3	Valve guide	2
4	Valve seat	2
10	Valve gasket	6
13	Valve cap	2
20	Hexagon head bolt	6
21	Spring washer	6
22	Plain washer	6
30	Diaphragm	1
31	Retainer plate	1
45	Flange unit	2

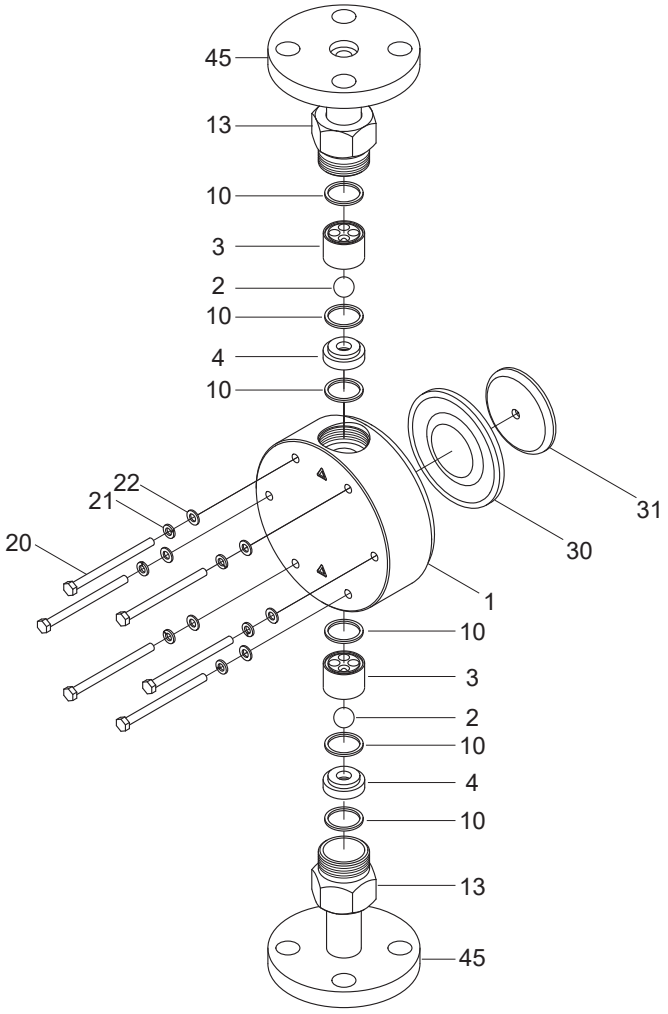

Specifications/Outer dimensions

Specifications

Information in this section is subject to change without notice.

■ Pump

Model code		Flow rate L/H	Max. discharge pressure MPa	Avg. power consumption W	Current value A	Connection	Weight kg
IX-C060 TC/TE	R/N	0.08-60	1.0	62	0.8	R1/2" /1/2"NPT	8
	FJ/FD/FA					JIS10K15A /DIN PN10 DN15 /ANSI 150Lb 1/2"	9
IX-C060 S6	R/N					R3/4" /3/4"-14NPT	11
	FJ/FD/FA					JIS10K20A /DIN PN10 DN20 /ANSI 150Lb 3/4"	12
IX-C150 TC/TE	R/N	0.2-150	0.4	62	0.8	R3/4" /3/4"NPT	9
	FJ/FD/FA					JIS10K20A /DIN PN10 DN20 /ANSI 150Lb 3/4"	9
IX-C150 S6	R/N					R3/4" /3/4"NPT	11
	FJ/FD/FA					JIS10K20A /DIN PN10 DN20 /ANSI 150Lb 3/4"	13

*The above information is based on pumping clean water at rated voltage and ambient temperature.
*Pressure overload protection will stop operation when a discharge pressure has risen 1.3 to 2 times higher than the maximum level.
*Allowable room temperature: 0-50°C (32-122°F)
*Allowable liquid temperature: 0-50°C (32-122°F) for the TC/TE type, 0-80°C (32-176°F) for the S6 type
*Allowable power voltage deviation: Within ±10% of the rated range
*Ambient humidity: 30-90%RH (non condensing)
*When running the IX-C150 S6 at or below 1.0L/H or the IX-C060 S6 at or below 0.4L/H, an actual flow rate may not meet a target rate.
*Noise level: 70dB(A) for the TC and TE types and 80dB(A) for the S6 type.

■ Power cable

Conduction section area	0.75 [mm^2] Triplex cable (L/N/PE)
Length	1950 [mm]
Standard	H03VV-F
Terminal treatment	European plug

■ Body colour

Blue	Munsell colour system 7.5PB 3/8

■ Control unit

Operation modes	MAN (Manual)		A flow rate is set with ↑ (Up) and ↓ (Down) keys.
	EXT	Analogue preset	4-20/0-20/20-4/20-0mA (proportional control of a flow by current patterns)
		Analogue variable	0-20mADC (proportional control of a flow by user-settable two points)
		Pulse control*1	0.00625mL/PLS - 120mL/PLS (C060)
			0.01560mL/PLS - 300mL/PLS (C150)
		Batch control*1	6.25mL/PLS - 120L/PLS (C060)
			15.6mL/PLS - 300L/PLS (C150)
		Interval batch control*1	0-9day, 0-23hr, 1-59min
			6.25mL - 120L/PLS (C060)
			15.6mL - 300L/PLS (C150)
		Profibus control	Profibus-DP Compliant to EN50170 (IEC61158)
Monitors	LCD	16×2 backlit LCD	
	LED	OPERATE	Lights in green colour during pump operation.
			Lights in orange colour when a Pre-STOP signal is input.
			Lights in red colour when the pump has stopped or flashes when pressure overload is detected.
		ALARM	Lights in red colour when Alarm OUT 1 or 2 is activated.
Operation	Key-pads	⏻ (Start/Stop), MENU, ESC, ↵ (Enter), ↑ (Up), ↓ (Down), ← (Left) and → (Right) keys	
Control functions	STOP		Pump OFF at contact input*2
	PRIME		Max spm operation while the UP and DOWN keys are pressed.
	Keypad lock		PIN number entry disables the function.
	Interlock		Pump OFF at contact input*2
	AUX		Pump ON at AUX speed at contact input
	Maximum flow rate setting		The max flow rate can be set at each control mode.
	Buffer		Accumulates the entered external pulse signal with buffer ON.
	Current value indication		An input current is displayed during operation in the ANA.V mode.
Input	Stop/ Pre-STOP		No-voltage contact or open collector*3
	AUX		No-voltage contact or open collector*3
	Interlock		No-voltage contact or open collector*3
	Analogue		0-20mADC (internal resistance is 200Ω.)
	Pulse		No-voltage contact/open collector (max 100Hz, min ON time: 5msec)
Output	Alarm (OUT 1)		No voltage contact (mechanical relay) 250VAC 3A (resistive load) Enable or disable the Batch Complete*4, STOP, Pre-STOP, Interlock, Leak Detection (default: ON) and Motor Overload (/Drive Error).
	Alarm (OUT 2)		No voltage contact (PhotoMOS relay) 24VAC/DC 0.1A (resistive load) Enable or disable the Volume Prop. PLS*5, Batch Complete*4, STOP, Pre-STOP, Interlock (default: ON), Leak Detection and Motor Overload (/ Drive Error).
	Power supply		12VDC 30mA or below
	Analogue		User-settable between 0-20mADC (allowable load resistance: 300Ω)
Power voltage*6			100-240VAC 50/60Hz

*1 For these control modes, the calibrated flow volume per shot is applied to the minimum settable flow volume per shot.

*2 The setting can be changed to "pump ON at contact input".

*3 The maximum applied voltage from the IX to an external contact is 12V at 5mA. When using a mechanical relay, its minimum application load should be 5mA or below.

*4 Once the Batch Complete output is set to enabled, other output functions turn disabled.

*5 Once the Volume Prop. PLS output is set to enabled, other output functions turn disabled.

*6 Observe the specified power voltage range. Otherwise failure may result. The allowable power voltage range is 90-264VAC.

Outer dimensions

■ IX-C060/-C150 TC/TE R/N-TB

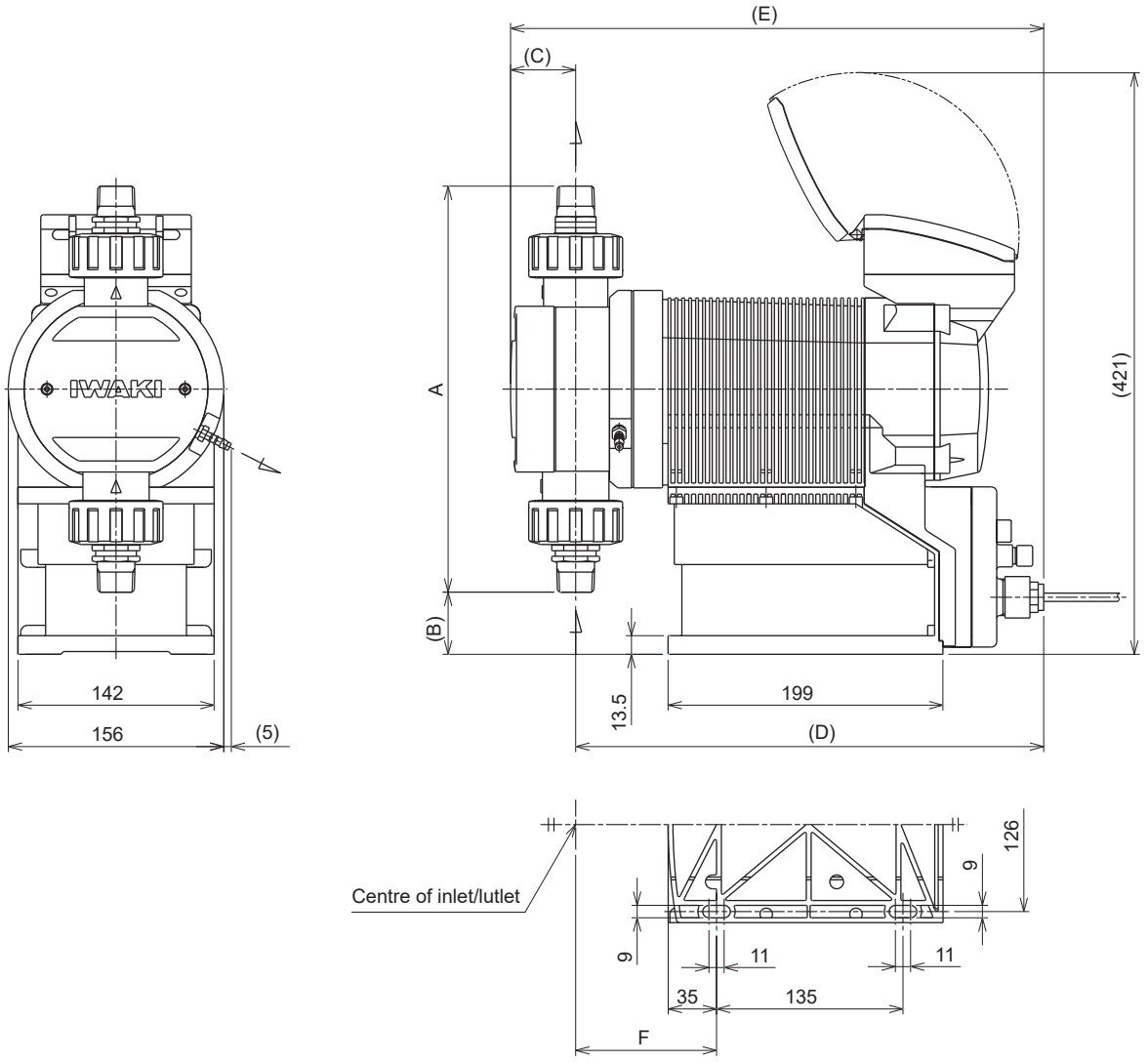

	A	B	C	D	E	F
IX-C150 TC/TE R/N	294	45	47	339	386	102
IX-C060 TC/TE R/N	325	30	35	339.5	375	102.5

■ IX-C060/-C150 TC/TE FJ/FD/FA-TB

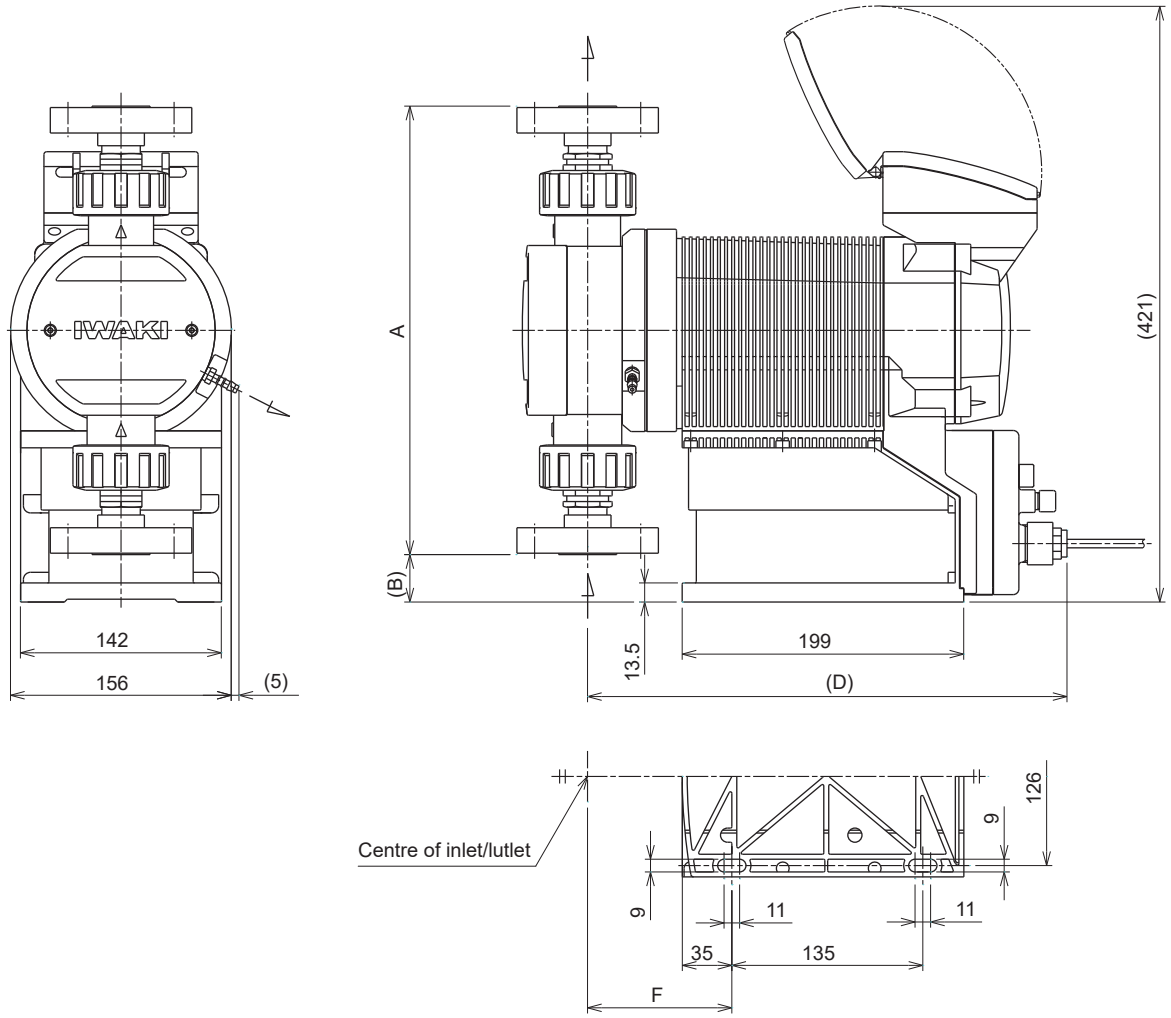

	A	B	C	D	E	F
IX-C150 TC/TE FJ/FD/FA	317	34	—	339	—	102
IX-C060 TC/TE FJ/FD/FA	335	25	—	339.5	—	102.5

■ IX-C060/-C150 TC/TE R/N-RF

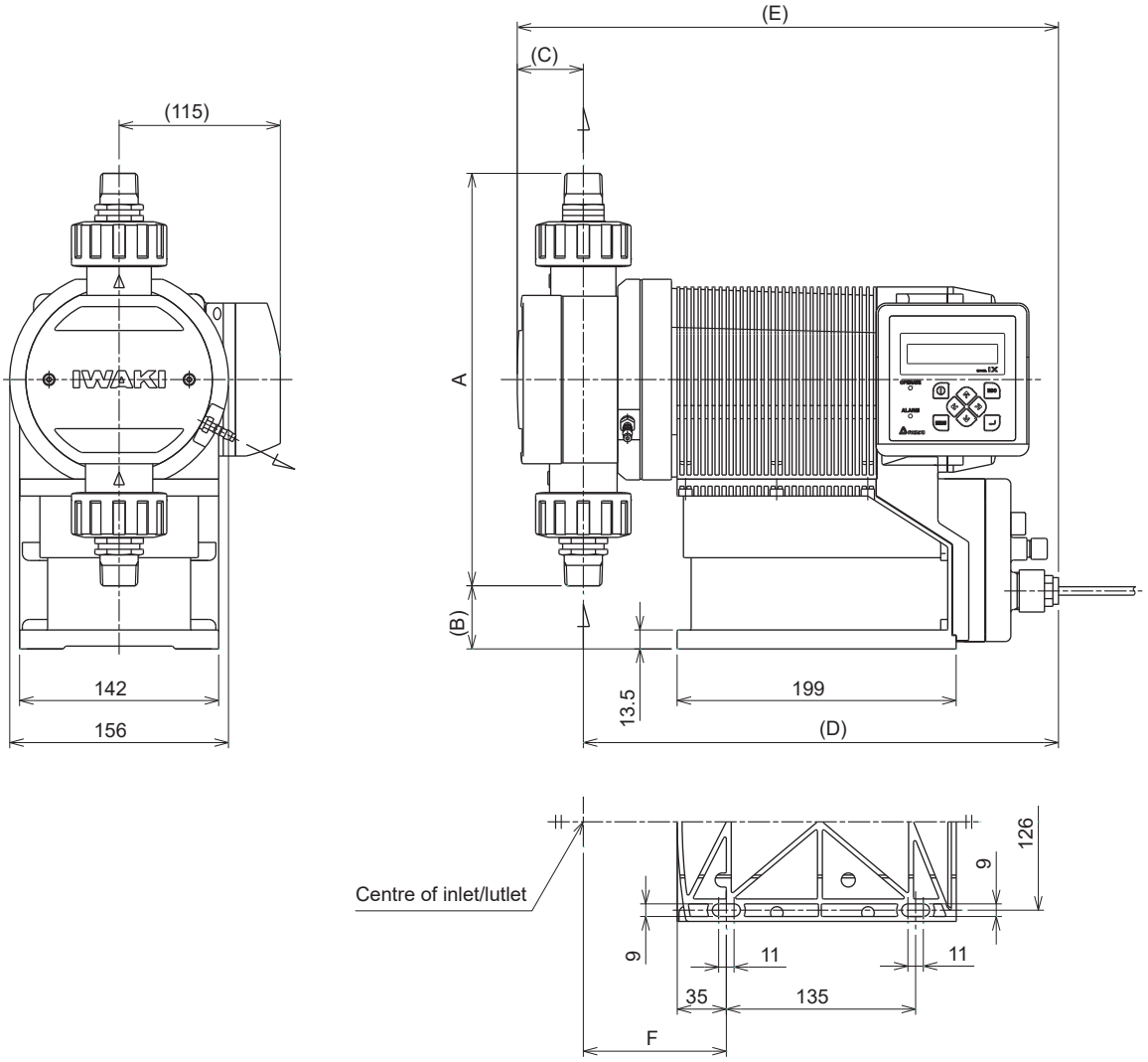

	A	B	C	D	E	F
IX-C150 TC/TE R/N	294	45	47	339	386	102
IX-C060 TC/TE R/N	325	30	35	339.5	375	102.5

■ IX-C060/-C150 TC/TE FJ/FD/FA-RF

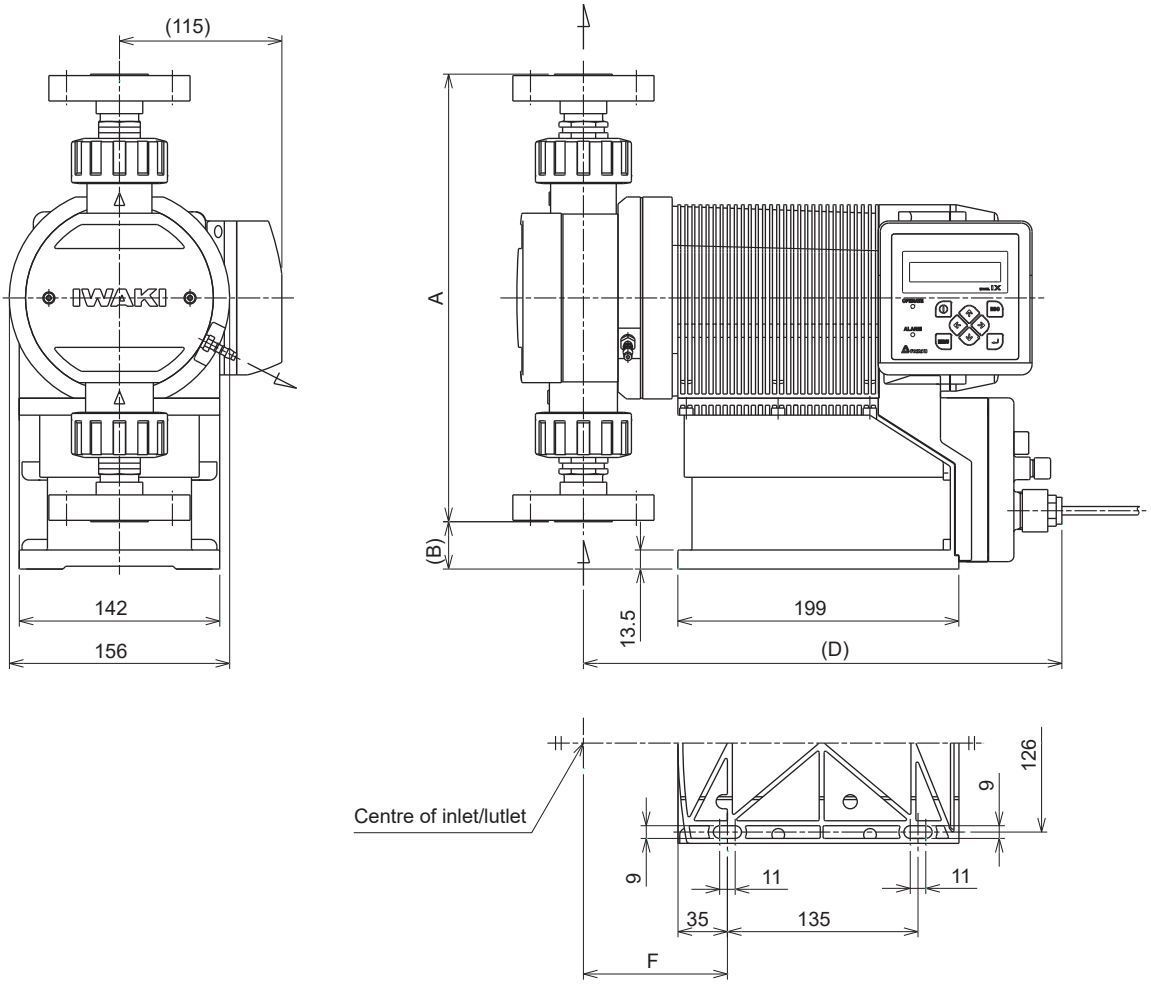

	A	B	C	D	E	F
IX-C150 TC/TE FJ/FD/FA	317	34	—	339	—	102
IX-C060 TC/TE FJ/FD/FA	335	25	—	339.5	—	102.5

■ IX-C060/-C150 S6 R/N-TB

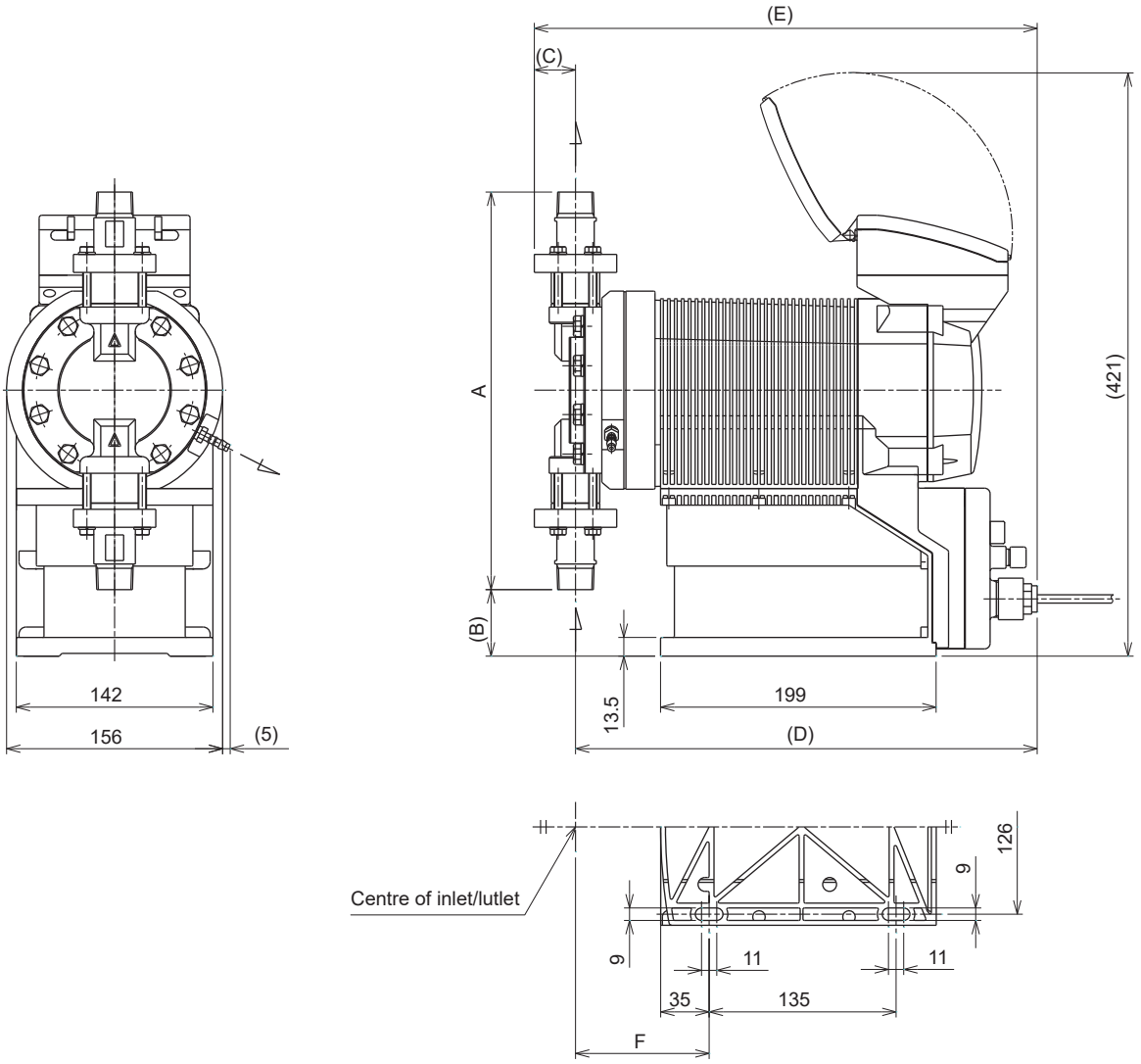

	A	B	C	D	E	F
IX-C150 S6 R/N	287	48	30	333.5	363	96.5
IX-C060 S6 R/N	240	72	25	339	364	102

■ IX-C060/-C150 S6 FJ/FD/FA-TB

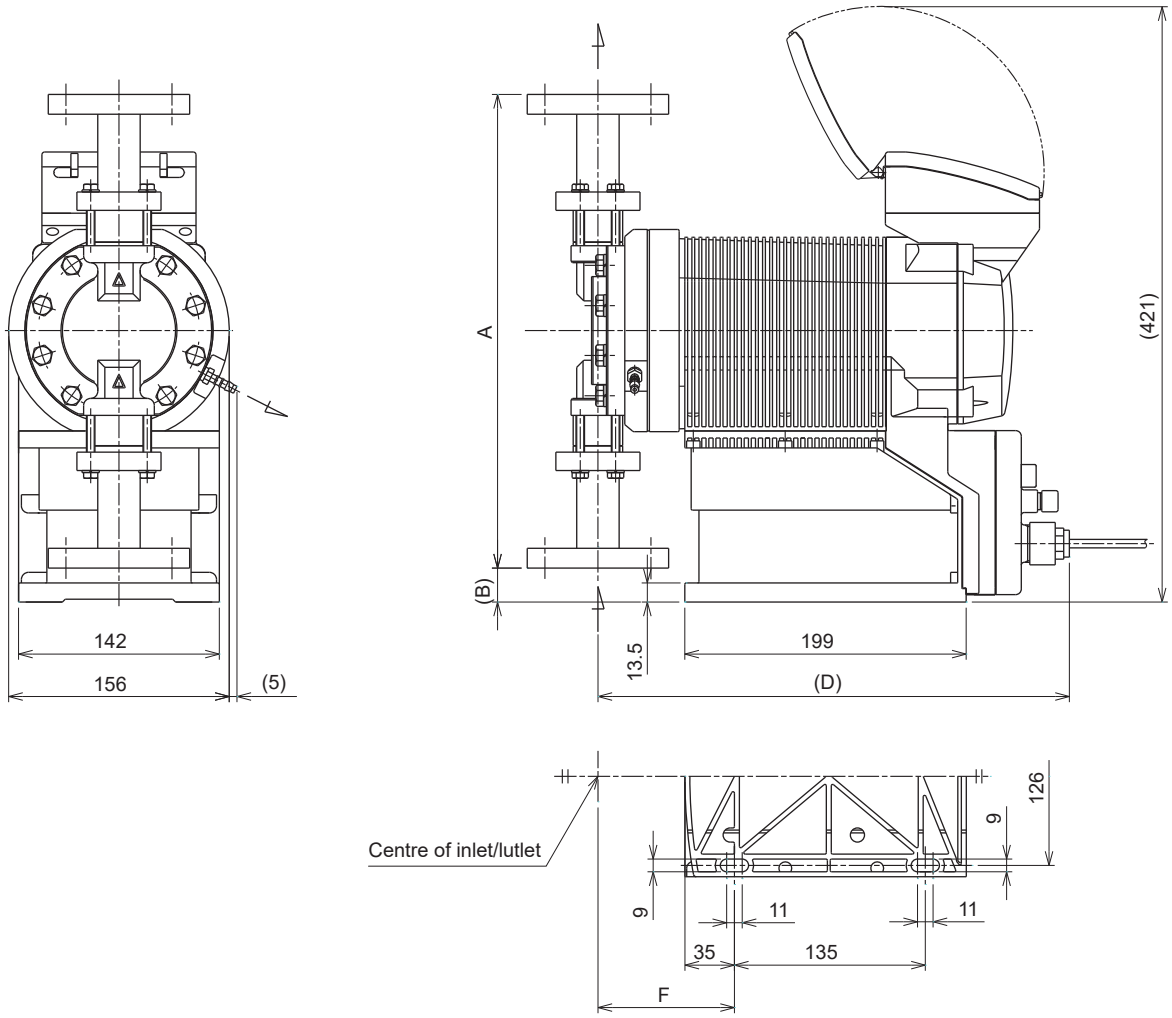

	A	B	C	D	E	F
IX-C150 S6 FJ/FD/FA	335	24	—	333.5	—	96.5
IX-C060 S6 FJ/FD/FA	270	57	—	339	—	102

■ IX-C060/-C150 S6 R/N-RF

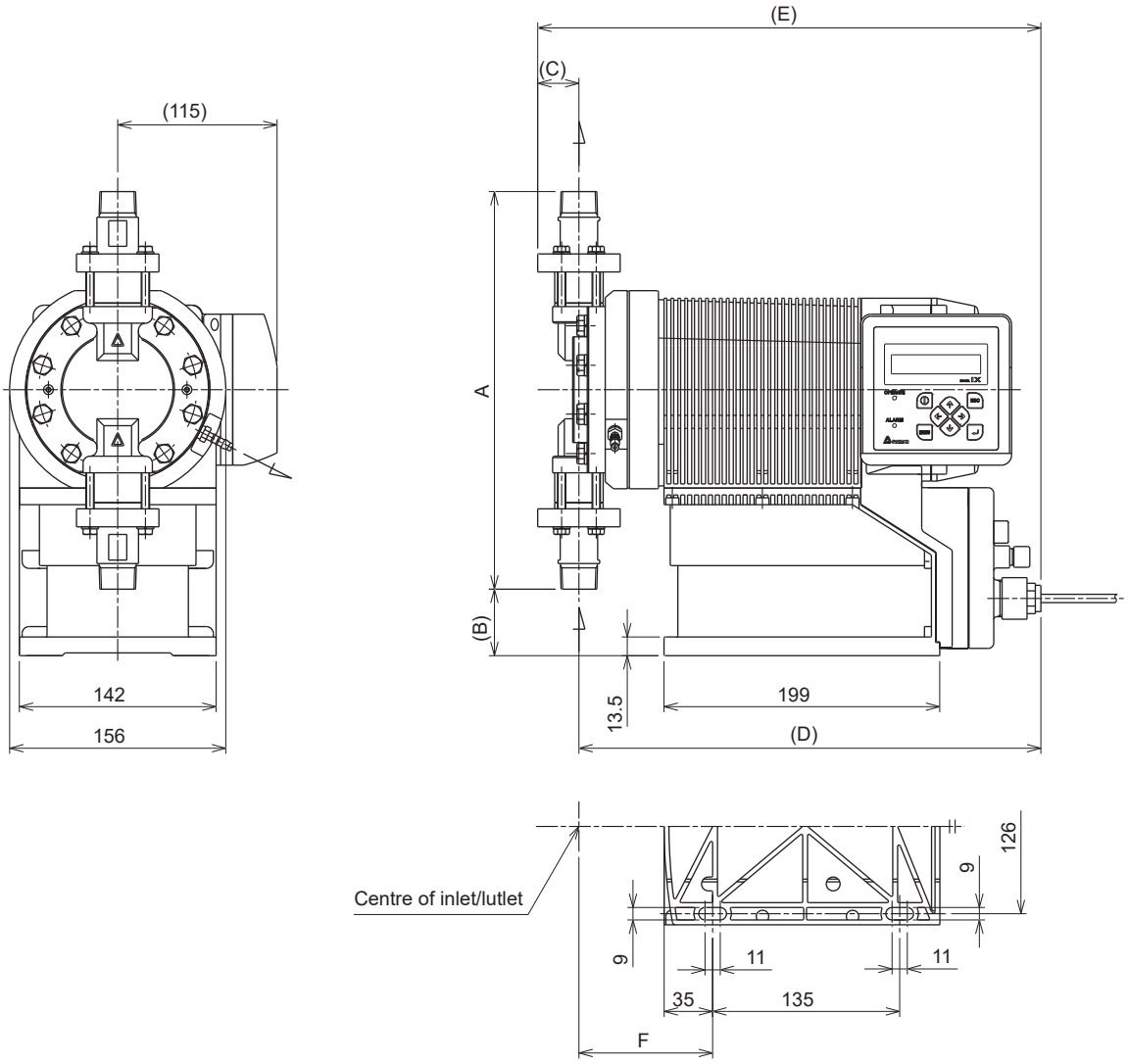

	A	B	C	D	E	F
IX-C150 S6 R/N	287	48	30	333.5	363	96.5
IX-C060 S6 R/N	240	72	25	339	364	102

■ IX-C060/-C150 S6 FJ/FD/FA-RF

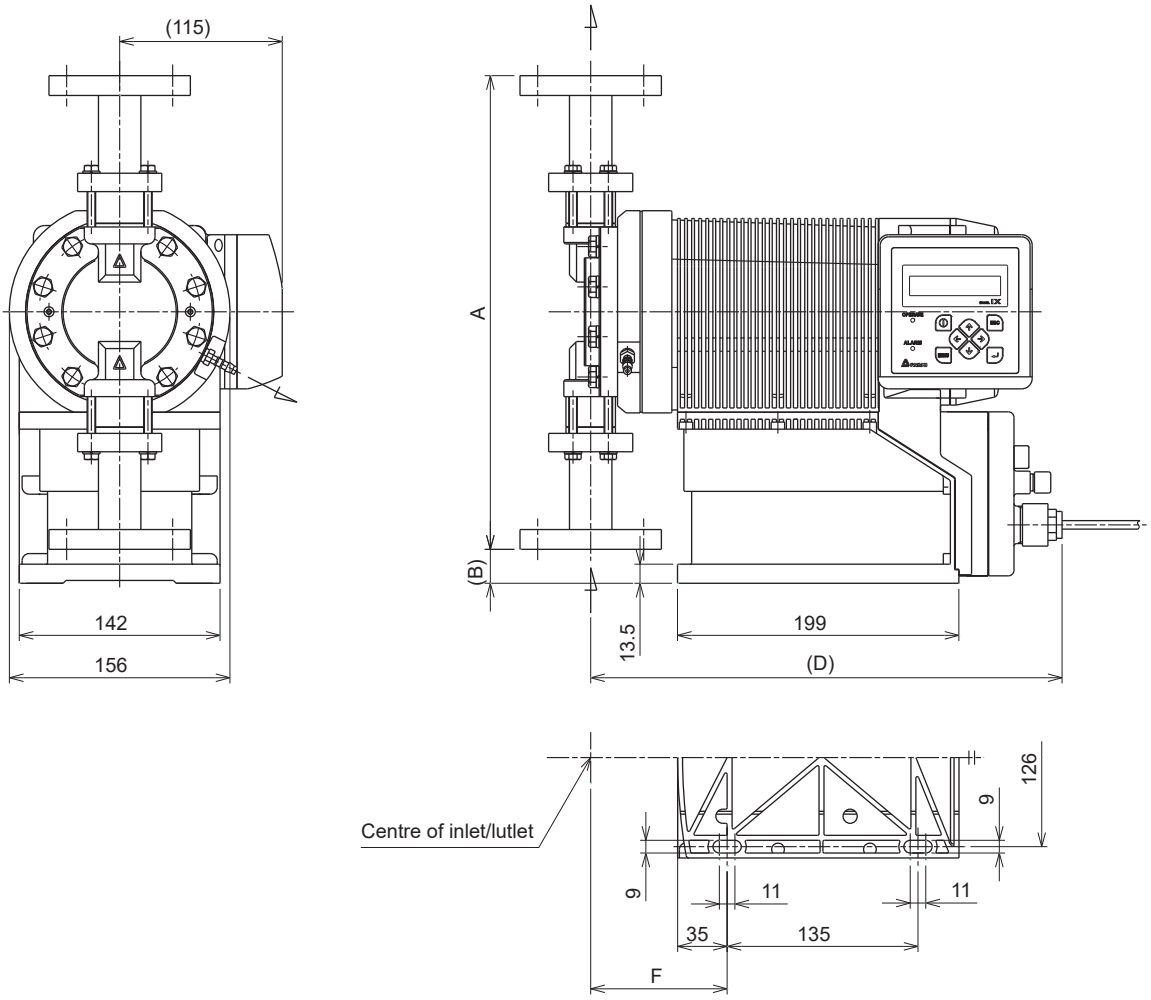

	A	B	C	D	E	F
IX-C150 S6 FJ/FD/FA	335	24	—	333.5	—	96.5
IX-C060 S6 FJ/FD/FA	270	57	—	339	—	102

EC DECLARATION OF CONFORMITY

A copy of the original Declaration of Conformity

(SUPPLIER'S NAME)

WE

IWAKI CO.,LTD.

(ADDRESS)

6-6 2-CHOME KANDA-SUDACHO CHIYODA-KU TOKYO JAPAN

(PRODUCT)

DECLARE UNDER OUR SOLE RESPONSIBILITY THAT THE PRODUCTS

HI-TECHNO PUMP

(MODEL NAME)

IX-C SERIES

TO WHICH THIS DECLARATION RELATES ARE IN CONFORMITY

WITH THE FOLLOWING STANDARDS OR DIRECTIVES AS FAR AS APPLICABLE

(DIRECTIVES)

MACHINERY DIRECTIVE 2006/42/EC (ANNEX IIA)
EMC DIRECTIVE 2014/30/EU
RoHS DIRECTIVE 2011/65/EU

(STANDARDS)

EN ISO12100: 2010 EN61000-6-2: 2005 EN IEC63000: 2018
EN809: 1998 + A1: 2009 EN61000-6-4: 2007 + A1: 2011

(A PERSON WHO IS AUTHORISED TO COMPILE THE TECHNICAL FILE IN THE COMMUNITY)

IWAKI EUROPE GMBH
SIEMENSRING 115 D-47877 WILLICH GERMANY

NOTE: THIS DECLARATION BECOMES INVALID IF TECHNICAL OR OPERATIONAL MODIFICATIONS ARE INTRODUCED WITHOUT THE MANUFACTURER'S CONSENT.

T. Sawada.

TSUTOMU SAWADA

DEPUTY SENIOR GENERAL MANAGER,

QUALITY ASSURANCE HEAD OFFICE

Tokyo, Sep. 2, 2021

(PLACE AND DATE OF ISSUE) **(NAME AND SIGNATURE OR EQUIVALENT MARKING OF AUTHORIZED PERSON)**

DOCUMENT NO. IS-51K-410-4

UK DECLARATION OF CONFORMITY

A copy of the original Declaration of Conformity

(SUPPLIER'S NAME)

WE

IWAKI CO.,LTD.

(ADDRESS)

6-6 2-CHOME KANDA-SUDACHO CHIYODA-KU TOKYO JAPAN

(PRODUCT)

DECLARE UNDER OUR SOLE RESPONSIBILITY THAT THE PRODUCTS

HI-TECHNO PUMP

(MODEL NAME)

IX-C SERIES

TO WHICH THIS DECLARATION RELATES ARE IN CONFORMITY WITH THE FOLLOWING REGULATIONS OR STANDARDS AS FAR AS APPLICABLE

(REGULATIONS)

S.I. 2008/1597 SUPPLY OF MACHINERY (SAFETY)
S.I. 2016/1091 ELECTROMAGNETIC COMPATIBILITY
S.I. 2012/3032 RESTRICTION OF HAZARDOUS SUBSTANCES

(STANDARDS)

EN ISO12100: 2010 EN61000-6-2: 2005 EN IEC63000: 2018
EN809: 1998 + A1: 2009 EN61000-6-4: 2007 + A1: 2011

(A PERSON WHO IS AUTHORISED TO COMPILE THE TECHNICAL FILE IN THE GB MARKET)

SENSYS LIMITED
UNIT 9 POND CLOSE WALKERN ROAD
STEVENAGE HERTS SG1 3QP UK

NOTE: THIS DECLARATION BECOMES INVALID IF TECHNICAL OR OPERATIONAL MODIFICATIONS ARE INTRODUCED WITHOUT THE MANUFACTURER'S CONSENT.

T. Sawada.

TSUTOMU SAWADA

DEPUTY SENIOR GENERAL MANAGER,

QUALITY ASSURANCE HEAD OFFICE

Tokyo, Sep. 6, 2021

(PLACE AND DATE OF ISSUE) **(NAME AND SIGNATURE OR EQUIVALENT MARKING OF AUTHORIZED PERSON)**

DOCUMENT NO. IS-51K-589

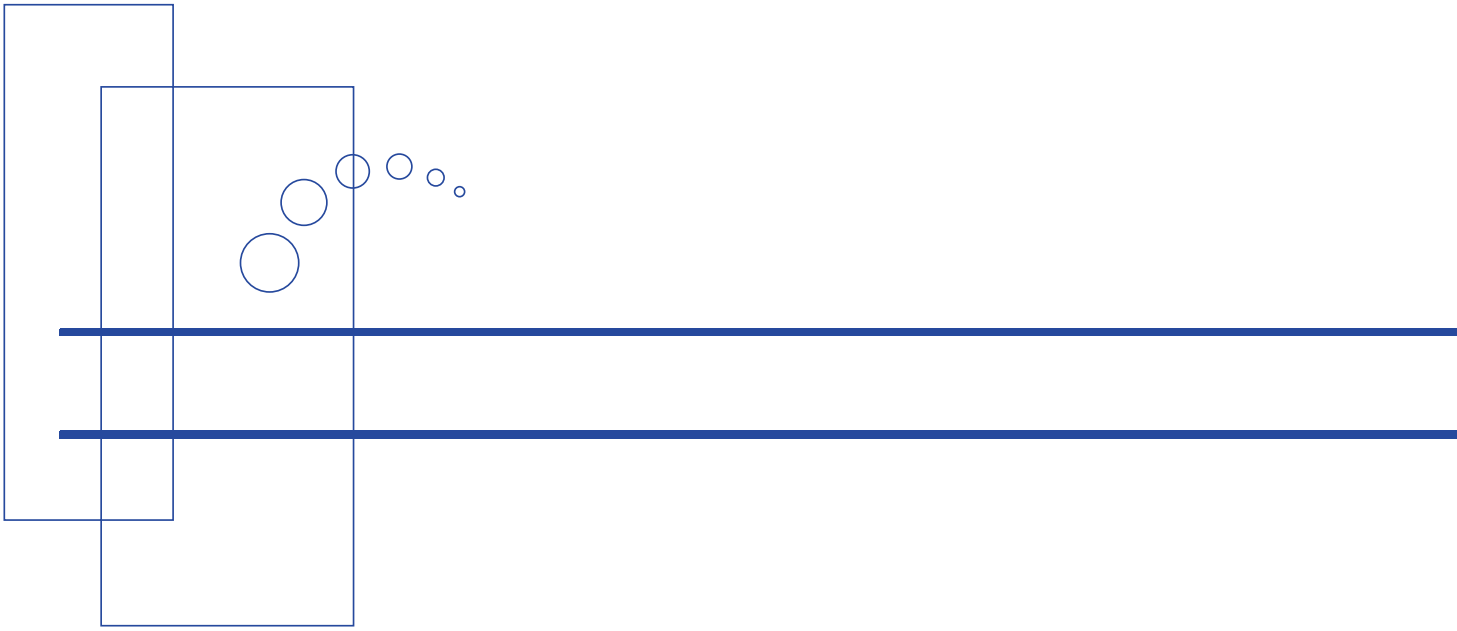

https://www.iwakipumps.jp

IWAKI CO.,LTD. 6-6 Kanda-Sudacho 2-chome Chiyoda-ku Tokyo 101-8558 Japan
TEL: +81 3 3254 2935 FAX: +81 3 3252 8892

European Headquarter / IWAKI Europe GmbH
TEL: +49 2154 9254 0 FAX: +49 2154 9254 48
Germany / IWAKI Europe GmbH
TEL: +49 2154 9254 50 FAX: +49 2154 9254 55
The Netherlands / IWAKI Europe GmbH (Netherlands Branch)
TEL: +31 74 2420011 FAX: +49 2154 9254 48
Italy / IWAKI Europe GmbH (Italy Branch)
TEL: +39 0445 561219 FAX: +39 0445 569088
Spain / IWAKI Europe GmbH (Spain Branch)
TEL/FAX: +34 934 741 638
Poland / IWAKI Europe GmbH (East Europe Branch)
TEL: +48 12 347 0755 FAX: +48 12 347 0900
Denmark / IWAKI Nordic A/S
TEL: +45 48 242345
Finland / IWAKI Suomi Oy
TEL: +358 10 201 0490
Norway / IWAKI Norge AS
TEL: +47 23 38 49 00
Sweden / IWAKI Sverige AB
TEL: +46 8 511 72900
Belgium / IWAKI Belgium N.V.
TEL: +32 13 670200 FAX: +32 13 672030
France / IWAKI France S.A.
TEL: +33 1 69 63 33 70 FAX: +33 1 64 49 92 73
U.S.A. / IWAKI America Inc.
TEL: +1 508 429 1440 FAX: +1 508 429 1386
Brazil / IWAKI Do Brasil Comercio De Bombas Hidraulicas LTDA.
TEL/FAX: +55 19 3244 5900
China (Shanghai) / IWAKI Pumps (Shanghai) Co., Ltd.
TEL: +86 21 6272 7502 FAX: +86 21 6272 6929
China (Hong Kong) / IWAKI Pumps Co., Ltd.
TEL: +852 2607 1168 FAX: +852 2607 1000
China (Guangzhou) / GFTZ IWAKI Engineering & Trading Co., Ltd.
TEL: +86 20 84350603 FAX: +86 20 84359181
China (Shenzhen) / IWAKI Pumps (Shenzhen) Co., Ltd.
TEL: +86 0755 8656 3696
Singapore / IWAKI Singapore Pte Ltd.
TEL: +65 6316 2028 FAX: +65 6316 3221
Indonesia / IWAKI Singapore Pte Ltd. (Indonesia Office)
TEL: +62 21 6906606 FAX: +62 21 6906612
Malaysia / IWAKIm SDN. BHD.
TEL: +60 3 7803 8807 FAX: +60 3 7803 4800
Korea / IWAKI Korea Co., Ltd.
TEL: +82 2 6238 4800 FAX: +82 2 6238 4801
Taiwan / IWAKI Pumps Taiwan Co., Ltd.
TEL: +886 2 8227 6900 FAX: +886 2 8227 6818
Thailand / IWAKI (Thailand) Co., Ltd.
TEL: +66 2 322 2471 FAX: +66 2 322 2477
Australia / IWAKI Pumps Australia Pty Ltd.
TEL: +61 2 9899 2411 FAX: +61 2 9899 2421

T924-10 '26/09