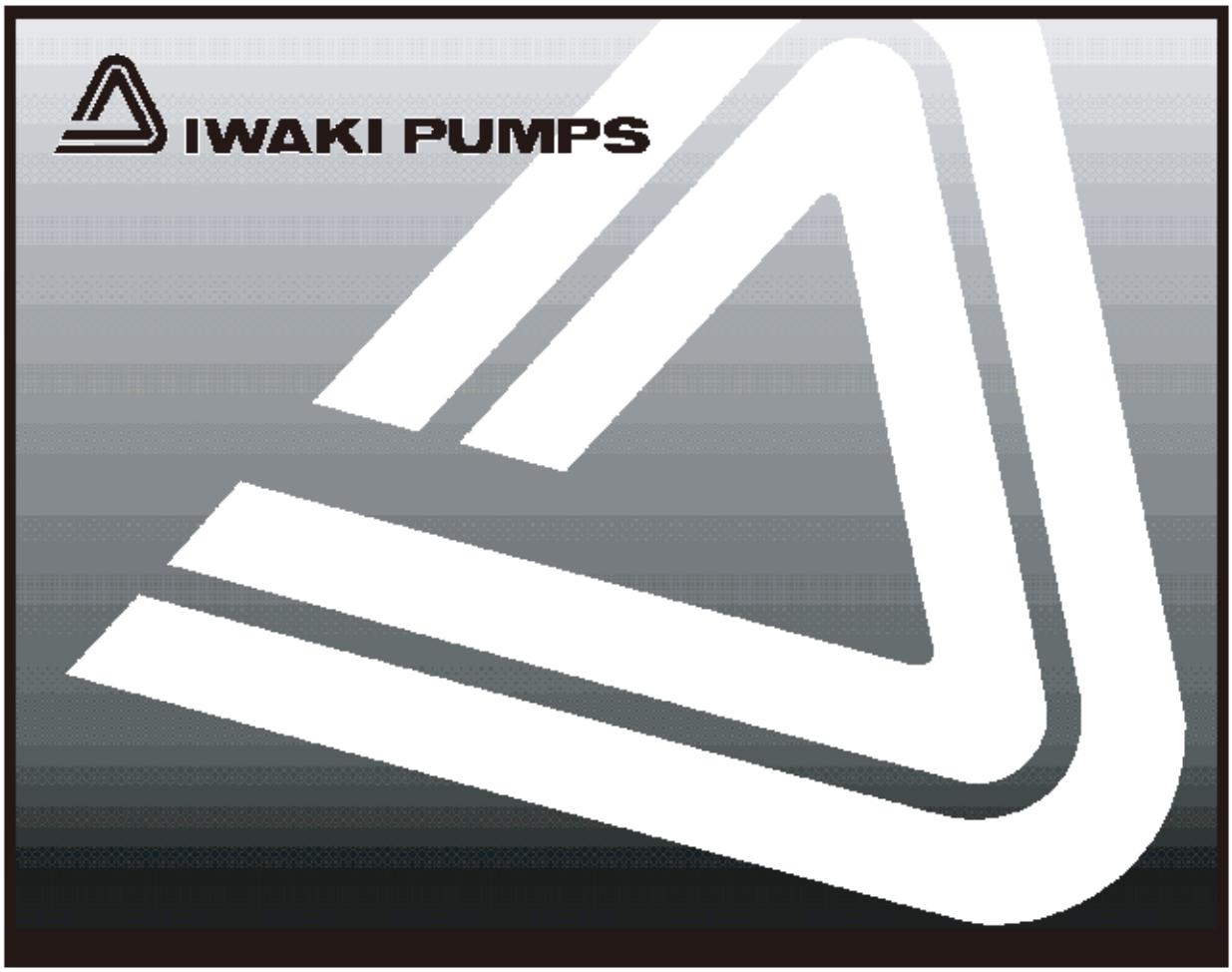

IWAKI Metering pump

LK-A/-B TC (Europe)

Instruction Manual

⚠Read this manual before use of product

Thank you for selecting an Iwaki LK-A/-B TC metering pump. This instruction manual deals with *"Safety instructions"*, *"Outline"*, *"Installation"*, *"Operation"* and *"Maintenance"* sections. Please read through this manual carefully to ensure the optimum performance, safety and service of your pump.

Contents

Important instructions ····· 1

Safety instructions ····· 2

Outline
1. Unpacking & Inspection 7
2. Product outline 7
3. Pump mechanism 8
4. Specification.....9
5. Model code 9
6. Overview 10
7. Part names (pump head).....11
8. Precautions for use 12

Installation
1. Before installation 14
2. Installation 15
3. Pipework.....16
4. Wiring 18

Operation
1. Operational precautions.....20
2. Commissioning 20
3. Operation.....22
4. Flow rate adjustment 23
5. Before/After a long period of stoppage 24

Maintenance
1. Troubleshooting.....26
2. Maintenance & Inspection 29
3. Spare & Wear parts 30
4. Dismantlement & Assembly 31

EC DECLARATION OF CONFORMITY 36
CE conformity 37
Waste Electrical and Electronic Equipment (WEEE)..... 37

This instruction manual should be kept on hand by the end user for quick reference.
Contact us or your nearest dealer if you have any questions.

Important instructions

For the Safe and Correct Handling of the Pump

- "Safety Instruction" section deals with important details about handling of the product. Before use, read this section carefully for the prevention of personal injury or property damage.
- Observe the instructions accompanied with "WARNING" or "CAUTION" in this manual. These instructions are very important for protecting users from dangerous situations.
- The symbols on this instruction manual have the following meanings:

⚠ **WARNING**	**Nonobservance or misapplication of "Warning" sections could lead to a serious accident which may result in death.**
⚠ **CAUTION**	**Nonobservance or misapplication of "Caution" sections could lead to personal injury or property damage.**

Types of Symbols



Indicates that "Warning" or "Caution" must be exercised. Inside this triangle, a concrete and practical image provided as a warning or caution message is depicted.



Indicates a prohibited action or procedure. Inside or near this circle, a concrete and practical image of the activity to be avoided is depicted.



Indicates an important action or procedure which must be performed or carried out without fail. Failure to follow the instructions herein can lead to malfunction or damage to the pump.

⚠ Export Restrictions

Technical information contained in this instruction manual might be treated as controlled technology in your countries, due to agreements in international regime for export control. Please be reminded that export license/permission could be required when this manual is provided, due to export control regulations of your country.

Safety instructions

⚠WARNING

- **Turn off power before service**
  Risk of electrical shock. Be sure to turn off power to stop the pump and related devices before service is performed.


Requirement

- **Stop operation**
  If you notice any abnormal or dangerous conditions, suspend operation immediately and inspect/solve problems.


Requirement

- **Do not use the pump in any condition other than its intended purpose**
  The use of the pump in any conditions other than those clearly specified may result in failure or injury. Use this product in specified conditions only.


Prohibited

- **Do not modify the pump**
  Alterations to the pump carry a high degree of risk. It is not the manufacturer's responsibility for any failure or injury resulting from alterations to the pump.


Do not remodel

- **Wear protective clothing**
  Always wear protective clothing such as an eye protection, chemical resistant gloves, a mask and a face shield during disassembly, assembly or maintenance work. The specific solution will dictate the degree of protection. Refer to SDS precautions from the solution supplier.


Wear protectors

- **Stay out from under suspended loads**
  Risk of personal injury. Keep away from the pump while it is lifted up.


Prohibited

- **Do not damage the power cable**
  Do not pull, knot or crush the power cable. Damage to the power cable could lead to a fire or electrical shock if cut or broken.


Prohibited

- **Do not stand on the pump**
  Injury or damage may result when the pump turns over.


Prohibited

- **Do not get access to the inside of the drive unit during operation**
  Risk of personal injury. A reciprocating diaphragm/shaft may catch the finger or hand.


Caution

Safety instructions

⚠WARNING

- **Do not replace the motor fan cover in operation**

  Any rotating part may catch the hand, finger, hair, or clothes, and it may result in serious injury.



- **Qualified personnel only**

  The pump should be handled or operated by qualified personnel with a full understanding of the pump. Any person not familiar with the product should not take part in the operation or maintenance of the pump.



- **Before starting the pump**

  Ensure no one is around the pump before connecting the power. The pump does not have an ON-OFF switch and starts automatically when the power cable is plugged in.



- **Closed-discharge operation is not allowed**

  Do not close a discharge line during operation. Otherwise, liquid leakage or pump-head/motor/piping breakage may result due to overpressure.



Safety instructions

⚠CAUTION

- **Use specified power only**

  Do not apply power other than that specified on the nameplate. Otherwise, failure or fire may result. Ensure the pump is properly grounded.


Requirement

- **Ventilation**

  Fumes or vapours can be hazardous with certain solutions. Ensure proper ventilation at the operation site.


Requirement

- **Do not install/store the pump:**
  - In a flammable/explosive/corrosive atmosphere.
  - In a dusty/humid environment.
  - Where ambient temperature can exceed 0-40ºC.
  - In direct sunlight or wind & rain.
  - Under mechanical vibrations


Prohibited

- **Spill precautions**

  Ensure protection and containment of solution in the event of plumbing or pump damage (secondary containment).


Requirement

- **Do not touch the pump or pipe with bare hands**

  Risk of burns. The surface temperature of the pump or piping becomes very high during and immediately after operation, depending on the liquid temperature.


Caution

- **Do not bring the pump close to a flammable substance**

  Keep the pump away from a flammable substance for the prevention of fire. Do not allow a leak of lubricating oil. Observe local rules and regulations for handling of oils.


Fire ban

- **Grounding**

  Risk of electric shock! Always properly ground the pump. Conform to local electric codes.


Grounding

- **Install a GFCI (earth leakage breaker)**

  An electrical failure of the pump may adversely affect other devices on the same line. Purchase and install an earth leakage breaker separately.


Electrical shock

Safety instructions

⚠CAUTION

- **Remove foreign matter**
  If foreign matter enters the pump, turn off the power and clean the pump. Otherwise, the pump may be damaged.



- **Preventative maintenance**
  Follow instructions in this manual for replacement of wear parts. Do not disassemble the pump beyond the extent of the instructions.



- **Do not use a damaged pump**
  Use of a damaged pump could lead to an electric shock or death.



- **Disposal of a used pump**
  Dispose of any used or damaged pump in accordance with local rules and regulations. See the last page of the manual to comply with the European Directive 2012/19/EU on waste electrical and electronic equipment.



- **Do not cover the pump with a cloth**
  Covering the pump may cause heat to build up in the motor, resulting in fire or electrical/mechanical failure.



- **Non freezing**
  Frozen liquid may damage the pump and piping. Drain liquid before leaving it for a long time or use measures to prevent liquid from freezing in winter.



- **Pressure removal**
  Solution in the discharge line may be under pressure. Release the pressure from the discharge line before disconnecting plumbing or disassembly of the pump to avoid solution spray.



Outline

1. Unpacking & Inspection 7

2. Product outline..... 7

3. Pump mechanism..... 8

4. Specification 9

5. Model code..... 9

6. Overview..... 10

7. Part names (pump head) 11

8. Precautions for use..... 12

Outline

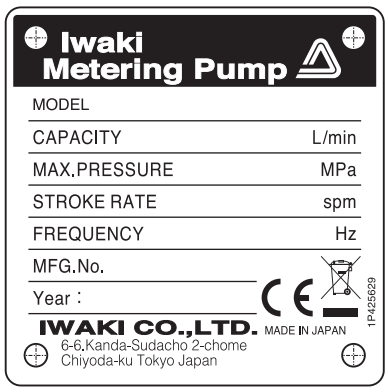

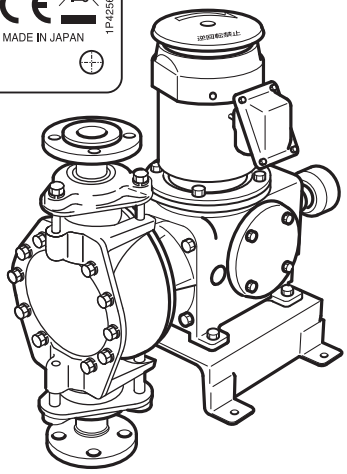

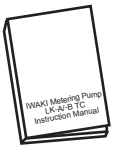

Instruction manual

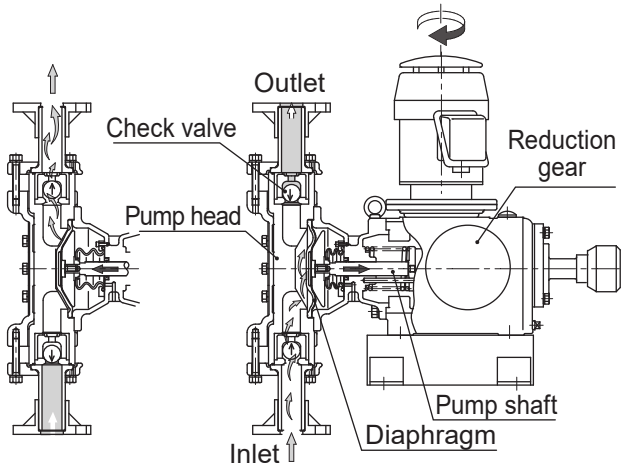

Discharge process Suction process

: Liquid flow
: Motor rotation
: Diaphragm reciprocation
: Valve movement

1. Unpacking & Inspection

On unpacking the product, check the following points. If you find any problems, contact your nearest distributor.

1. Check the information on nameplate (model code, flow rate, discharge pressure and stroke rate) to see if the product is delivered as per order.

2. Check for transit damage, deformation, and loose bolts.

NOTE: The pump may fall over when the package is opened with no supports. Hold the pump for the prevention of personal injury.

*The CE marking on our product(s) is for us to market the product(s) into the European market, however, the CE marking does not ensure any safety or conformity of the product(s) outside the European market.
When the pump is incorporated into the equipment marketed in the European market, such equipment must meet all the requirements of applicable directives.
In such a case, any person who places the equipment on the market must carry a CE mark on the equipment as a manufacturer.

2. Product outline

The LK-A/-B TC series is mechanically-driven diaphragm pump. Fluoroplastic and alumina ceramic wet ends allow for delivery of various chemicals including strong acid in water treatment and chemical, paper & food industries.

■ Principle of operation

Motor rotation is transmitted to an worm wheel & shaft and then converted to the reciprocating motion of the pump shaft. Volumetric change occurs in the pump head as the diaphragm moves back and forth and liquid is pumped because of the suction and discharge check valves (ball valves).

Suction process

When the diaphragm moves back, negative pressure in the pump head closes the discharge check valve and open the suction check valve to take in liquid.

Discharge process

When the diaphragm moves forward, positive pressure in the pump head opens the discharge check valve and closes the suction check valve to deliver liquid.

3. Pump mechanism

■ Gear unit

The gear unit of the LK-A/-B TC is spring back design. Motor rotation is transmitted to a worm wheel shaft and then converted to reciprocating motion of the pump shaft with the assistance of a slider and a spring.

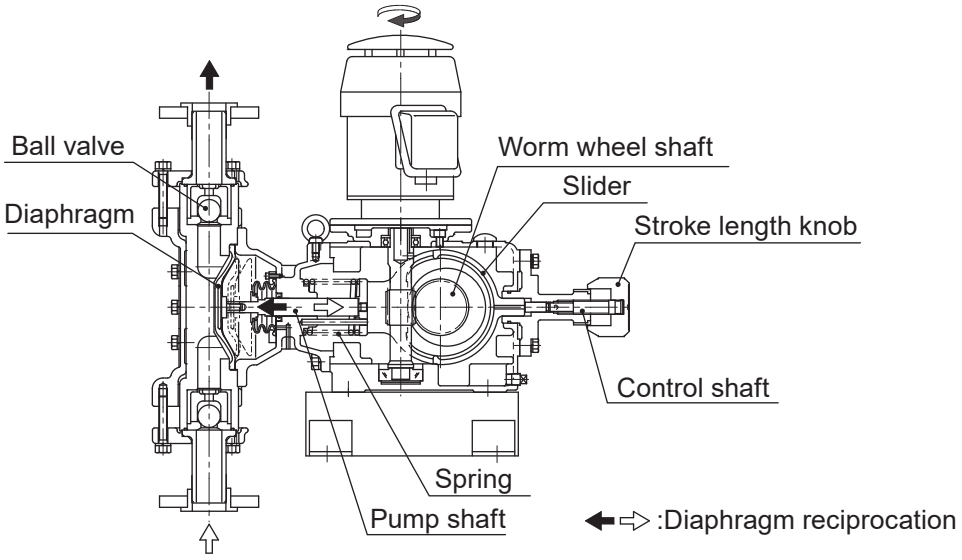

■ Stroke length knob

Use the stroke length knob at the end of the control shaft to determine a flow rate in between 0 and 100%, changing a slider position. See page 23 for detail.

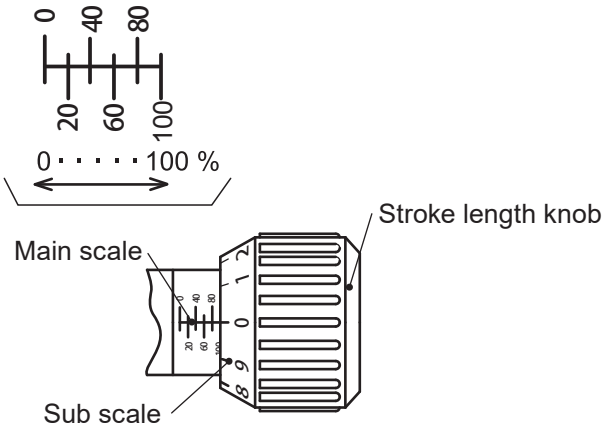

4. Specification

Model	Max flow L/min		Max discharge pressure MPa	Stroke rate spm		Max stroke length mm	Flange size	Motor output kW	Approx weight (with motor) kg
	50Hz	60Hz		50Hz	60Hz				
LK-A55	2.8	3.3	0.7	48	58	10	DN 25 (DIN PN10)	0.37	63
LK-A57	6.0	7.2	0.5	96	116				
LK-A65	9.0	10.8	0.2	48	58	17.5	DN 40 (DIN PN10)		72
LK-B65			0.5					0.75	100

*The above information is based on pumping clean water at ambient temperature.
*Metering accuracy : ±2%FS or below
*Linearity : ±3%FS or below
*Allowable liquid temperature range : 0-50ºC
*Suction lift : 1m or below (with full stroke length)
*Allowable ambient temperature : 0-40ºC

■ Noise level (RV)

Model	Noise level dB (A)
A55	75
A57	80
A65	85
B65	

5. Model code

LK - A 6 5 TC T - S
a b c d e f g

a. Series name
LK : Mechanically-driven diaphragm pump with fluoroplastic pump head and valve seat

b. Drive unit
A : 0.37kW motor B : 0.75kW motor

c. Diaphragm size
5, 6

d. Reduction gear ratio
5 : 1/30 7 : 1/15

e. Wet end materials

Part names	Wet end materials
Pump head	CFRPVDF
Ball valve	Highly alumina ceramics
Valve seat	CFRPVDF
O ring	FKM
Valve gasket	PTFE
Diaphragm	PTFE+EPDM (EPDM is not a wet end.)
Allowable liquids	Strong sulfuric acid

PTFE: Polytetrafluoroethylene CFRPVDF: Polyvinylidene fluoride
EPDM: Ethylene-propylene rubber FKM: Fluorine-contained rubber

f. Connection
T: Flange (DIN) No code: Others

g. Special version
No code : Standard S : Custom design

6. Overview

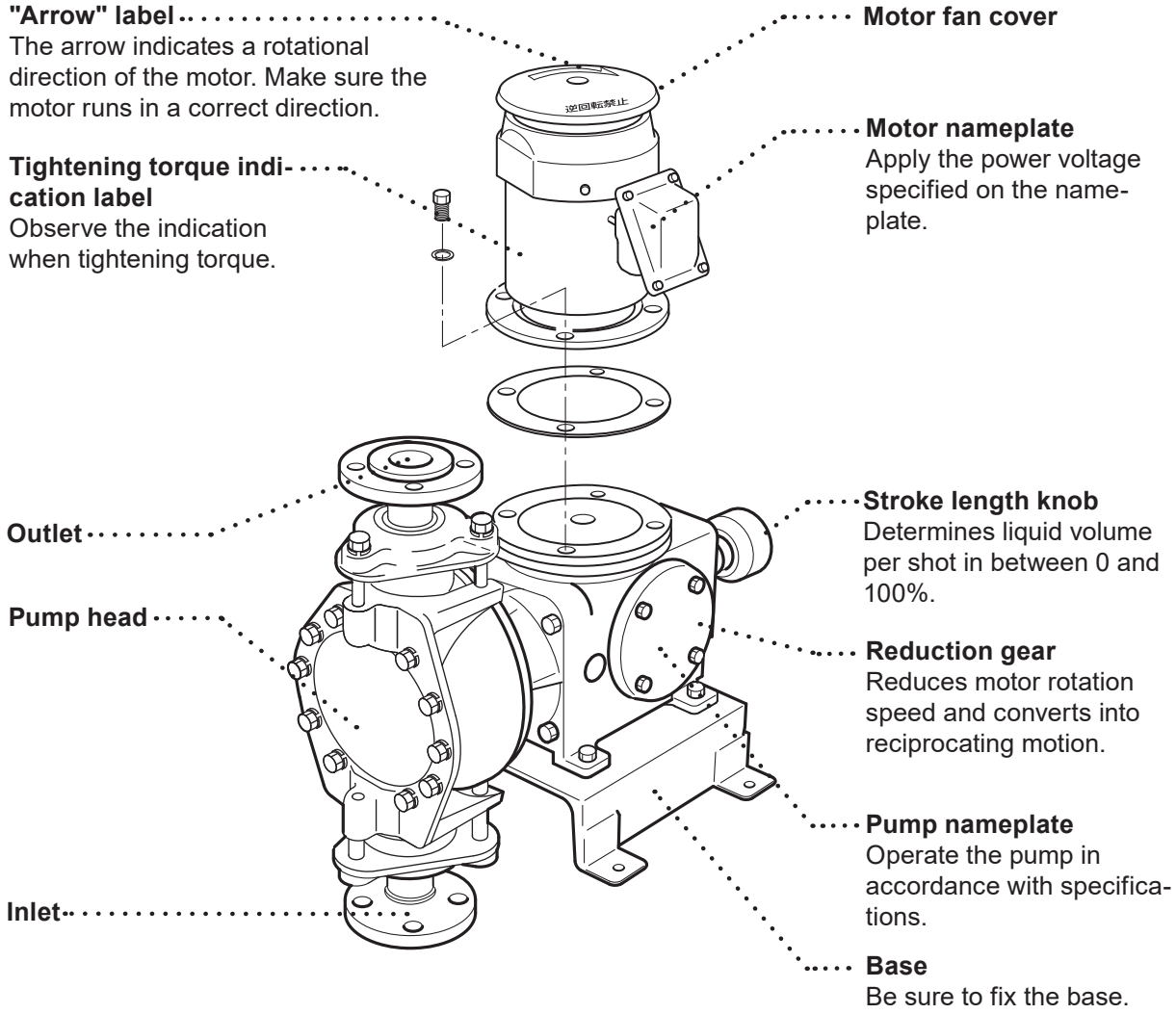

■ Motor mounting

Mount the motor to the drive unit over the gasket A. Use the proper size bolts and washers as shown below.

	Hex. bolt	Spring washer
LK-A	M8×25	M8
LK-B	M10×25	M10

⚠CAUTION

- Wet a cloth with tap water and wring it out for cleaning the pump. Use a neutral detergent for greasy dirt and then rub with a dry cloth. Do not wipe nameplates, labels or pump body with any solvent.
- Risk of fire or electric shock. Be sure to turn off all the related power supplies prior to any inspection/maintenance and installation works. Keep the terminal box, motor fan cover and electric wiring dry.

7. Part names (pump head)

LK-A55/-A57 TC

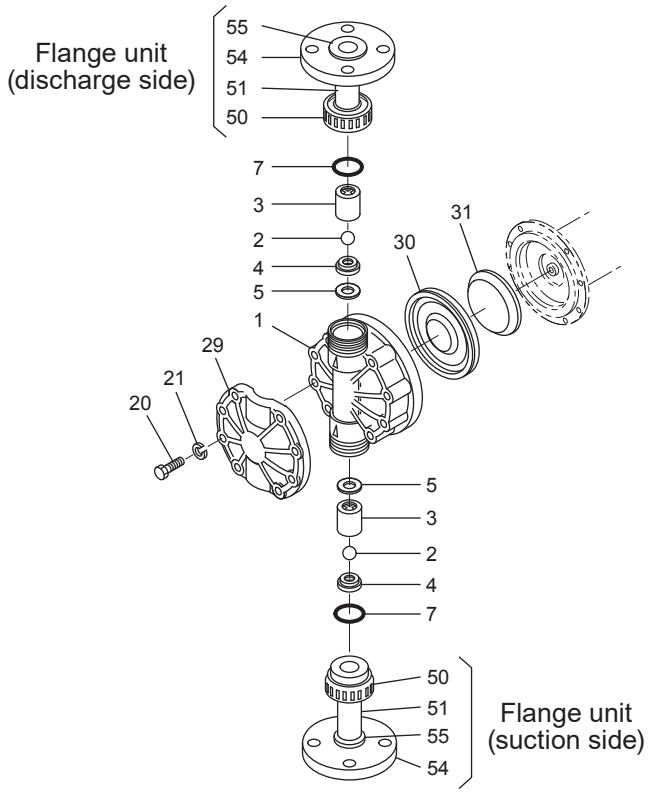

No.	Names	Q'ty
1	Pump head	1
2	Valve	2
3	Valve guide	2
4	Valve seat	2
5	Valve gasket	2
7	O ring	2
20	Hex head bolt	8
21	Spring washer	8
29	Reinforcing plate	1
30	Diaphragm	1
31	Retainer	1
50	Nut	2
51	Union	2
54	Flange	2
55	Flange adapter	2

LK-A65/-B65 TC

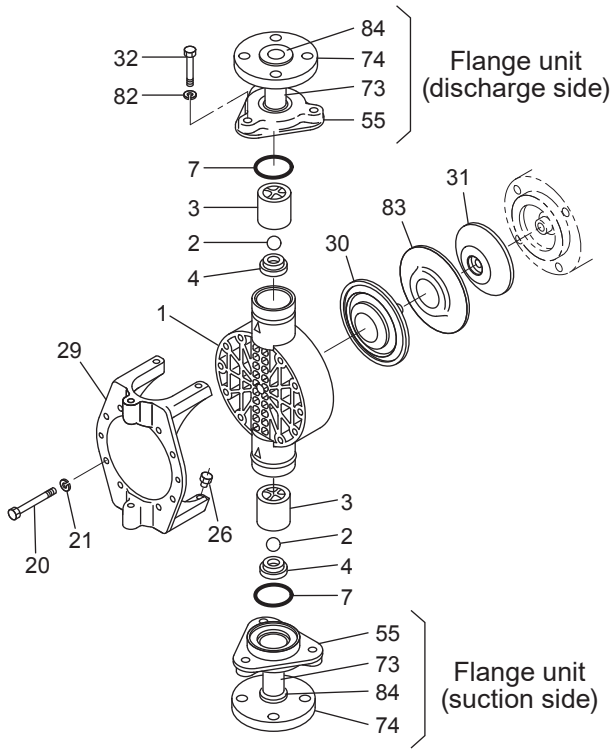

No.	Names	Q'ty
1	Pump head	1
2	Valve	2
3	Valve guide	2
4	Valve seat	2
7	O ring	2
20	Hex head bolt	10
21	Spring washer	10
26	Insert bumper	2
29	Reinforcing plate	1
30	Diaphragm	1
31	Retainer plate	1
32	Hex head bolt	6
55	Setting flange	1
73	Port	2
74	Flange	2
82	Spring washer	6
83	Rear seat	1
84	Flange adapter	1

8. Precautions for use

Always observe the following points.

1. Use care handling the pump. Do not drop. An impact may affect pump performance. Contact us or your nearest distributor if a pump has been damaged.

2. Be careful not to exceed the maximum flow rate and discharge pressure. A flow rate and discharge pressure change with piping length, piping I.D., piping layout. Use the pump only for liquid delivery.

3. Do not close the discharge/suction valves during operation, or the pump/piping system may be damaged by over-pressure. Do not leave the valves opened after operation.

4. Keep the supply tank free from foreign matters. Foreign mattes may clog the pump/piping system, causing flow fluctuation or a poor flow.

5. Release a pressure from a discharge line before dismantling the pump or removing piping.

6. The metering pump by nature keeps working, exceeding the limit pressure of discharge line if it is blocked. This may damage the pump/piping system and burn out the motor. Install a relief valve close to the pump and fix its set pressure below the maximum allowable pressure of the pump/discharge line.

7. Install an air chamber in order to reduce flow pulsation, piping vibration and overfeeding[*1].

8. Install a back pressure valve in order to reduce the possibility of overfeeding.

9. Provide a strainer at the end of a suction line for the prevention of foreign matter interfusion (Clean the strainer periodically.). Otherwise, clogging may result.

10. Install a pressure gauge to monitor the discharge line pressure.

11. Be sure to turn off all the related power supplies prior to any inspection/maintenance and installation works (motor fan cover). Working on the pump with power ON, any rotating part may catch the hand, finger, hair, or clothes, and it may result in serious injury.

12. Use the stroke length knob to determine the liquid volume per shot. See page 23 for detail.

13. Check the oil condition and level. Remove deteriorated oil and feed the new oil until it reaches the middle of the oil gauge. See page 30 for detail.

14. Do not make intermittent operation. Frequent ON-OFF operation damages internal parts of the pump and motor in a short time.

Glossary*[1] A condition check valves in the pump head stay open and liquid continues flowing into discharge line. Overfeeding occurs when the discharge line pressure is much lower than the suction line pressure.

Installation

1. Before installation 14

2. Installation..... 15

3. Pipework..... 16

4. Wiring 18

Installation

1. Before installation

Always observe the following points. Observe information on the drawing and specification sheet. Allow sufficient space around the pump for easy access and maintenance.

⚠CAUTION

- **Use care handling the pump.**
  Do not drop. An impact may affect pump performance. Keep the pump level when lifting it up.


Requirement

- **Ventilation**
  Fumes or vapours can be hazardous with certain solutions. Ensure proper ventilation at the operation site.


Caution

- **Qualified electrician only**
  Electrical work should be performed by a qualified electrician. Otherwise, personal injury or property damage could result.


Requirement

- **Keep the pump free from stress**
  Use measures to keep the pump connections free from stress. Weight and thermal expansion/contraction of the piping can stress connection points.


Prohibited

- **Do not lay the pump on its side**
  Lubricant oil may leak from the gear box and wet the motor.


Prohibited

■ Do not install the pump in the following places:

- Where liquid will be held.
- Where the pump is not accessible.
- Where ambient humidity can exceed 35-85%RH.
- Where the pump can not be kept dry (except outdoor-use type).
- In a dusty environment.
- Where ambient temperature can exceed 0-40ºC.
- Under mechanical vibrations

2. Installation

Check if installation doesn't adversely affect facility, surrounding equipment and the pump.

Install the pump according to the following instructions to ensure the optimum performance, safety and service.

■ Installation location

• Allow sufficient space around the pump for easy access and maintenance.

• Select a level location, free from vibration, that won't hold liquid. Always use a level gauge.

• Ensure protection and containment of solution in the event of plumbing or pump damage (secondary containment).

■ Pump position

Install the pump according to the following instructions.

• Install the pump as close to a supply tank under flooded suction lift.

NOTE: See "***3. Pipework***" for more information on pipework. The pipework section describes a basic layout and precautions.

■ Pump mounting

• See the diagram below for mounting the pump in the foundation.

• For the pump without the baseplate, do not concrete any parts of the pump, especially the case, or the pump can not be dismantled.

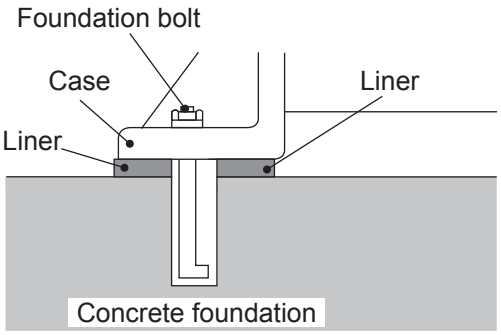

3. Pipework

Foreign matters such as sand and scale may enter pipework while you are working. They may cause fatal damage to the pump. Be sure to blow them out before operation. Also, do not apply adhesive too much or leave a screw or nut. If pipework directory weighs on the pump, the pump may deform. Be sure to install pipe supports.

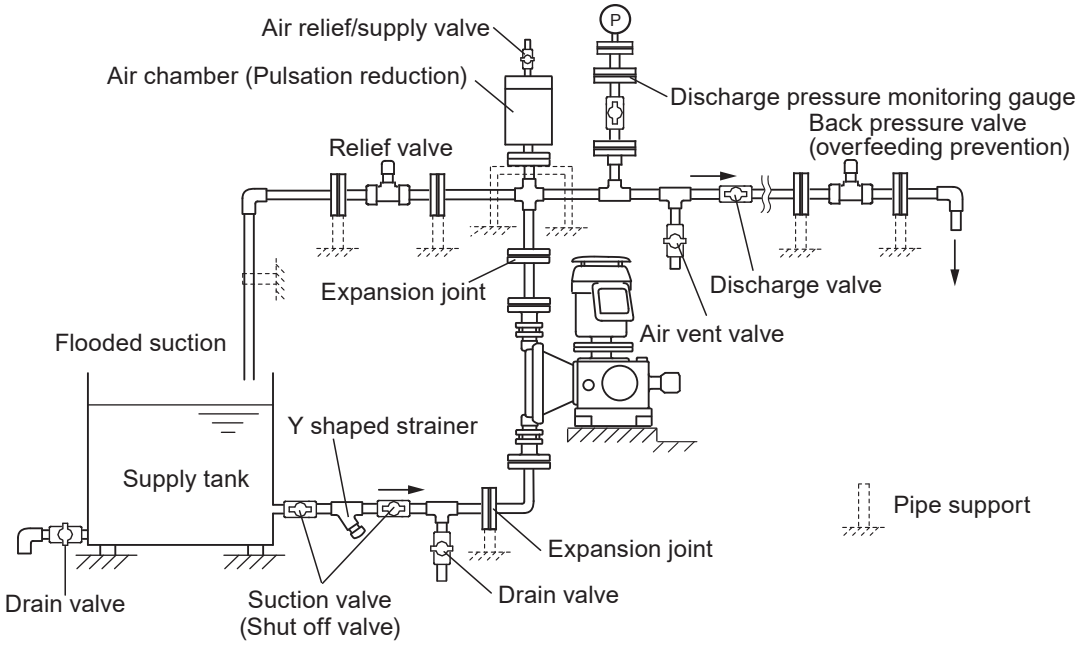

NOTE: Design an efficient layout to meet NPSHr, especially when planning to deliver slurry.

1. Built an optimal piping system, taking account of the maximum pressure resistance and possible pressure dorp. Always use a corrosion resistant pipe material.

2. Always build up a flooded suction system. Have a suction line shortest with the minimum number of bends. Support piping by pipe supports so that the pump is not subject to piping weight or thermal stress. Do not allow any arched line where air may be trapped. A suction line should be laid on a rising gradient of 1/100 toward the pump.

3. Install a gate valve on a discharge line not only for adjusting a discharge flow but also smooth operation, inspection and maintenance. Make sure that a discharge or an air vent line is open during self-priming operation.

4. Install a drain valve if it is possible for liquid in a discharge line to freeze.

5. Connect the pump to pipework, fastening the flange tightening bolts evenly in diagonal order. No gap is allowed. Always use a rubber gasket in between flange connection if a metal pipe flange is used.

<Tightening torque>

Model	Bolt size	Tightening torque
LK-A55/-A57 TC LK-A65/-B65 TC	M16	20N•m

6. Flange connection must be free from any tension or distortion, or a leak or pipe damage may result.

7. Use measures to keep the pump connections free from stress. Weight and thermal expansion/contraction of the piping can stress connection points.

8. Do not allow any inverted arch line in pipework when handling slurry. Provide a drain port as necessary.

9. Install a flushing line for cleaning the pump after handling a harmful liquid.

10. If the pump is used to transfer a high or low-temperature liquid, install the flexible piping to protect the pump from the expansion and contraction of piping by thermal stress.

11. Do not apply adhesive too much, especially when using PVC discharge line.

12. Flush the inside of the pump and piping with pure water or the liquid to be delivered before the start of operation. Inlet and outlet of some models are covered with a cap. Remove before installation.

13. Install a relief valve close to the pump and fix its set pressure below the maximum allowable pressure of the pump/piping system.

■ Suction line

1. The suction line I.D. should be equal to or wider than the I.D. of the pump so that NPSHr is satisfied.

2. The maximum suction lift changes with pump size, operating conditions and liquid characteristics. Always keep the inlet of the pump below the liquid level of the supply tank (flooded suction).

3. Joints of the suction line must be air tight. Otherwise output may be affected.

4. Foreign matters in the pump head may prevent check valve action. Install a strainer at the end of the suction line.

■ Discharge line

1. Install a relief valve on the discharge line, close to the pump. Do not install a gate valve in between the relief valve and the pump.

2. Install a pressure gauge on a discharge line for monitoring operating conditions.

3. The set pressure of the relief valve must not exceed the maximum allowable pressure of the discharge line.

4. Discharge line pressure must be 0.03MPa or higher than suction line pressure. Otherwise, ball valve may not check flow and overfeeding may result. Install a back pressure valve on the discharge line to keep the minimum pressure difference as necessary.

4. Wiring

Electrical work should be performed by a qualified electrician. Otherwise, personal injury or property damage could result. Wiring work should be done in accordance with the relevant regulations, using the recommended wiring accessories.

1. Install an electromagnetic switch according to motor specifications (voltage, capacity, etc.).
2. The pump and motor do not have protection equipment. Install an overcurrent protection or earth leakage breaker according to motor specification.
3. Electromagnetic switches and push buttons should be installed away from the pump.
4. If the pump is used out of doors, protect switches from rainwater.

■ Electrical motor

1. Read through a motor instruction manual before operation.
2. Observe the rotational direction shown on the motor. Three phase motors rotate clockwise when U, V and W motor terminals are connected in line with R, S and T power supply terminals. The motors rotate anticlockwise if two out of these three terminal combination are interchanged.

NOTE: Do not remove the motor-fan cover while power is ON, any rotating part may catch the hand, finger, hair, or clothes, and it may result in serious injury.

3. Be sure to earth the motor.
4. Install an ammeter into the pump system to monitor operating condition.

Operation

1. Operational precautions 20

2. Commissioning 20

3. Operation 22

4. Flown rate adjustment 23

5. Before/After a long period of stoppage 24

Operation

1. Operational precautions

⚠ WARNING

- **Qualified personnel only**
  This product should be handled or operated by qualified personnel with a full understanding. Any person not familiar with the product should not take part in the operation or maintenance of this product.



- **Be sure to turn off all the related power supplies prior to any inspection/maintenance and installation works (motor fan cover).**
  Working on the pump with power ON, any rotating part may catch the hand, finger, hair, or clothes, and it may result in serious injury.



- **Do not touch the pump or pipe with bare hands**
  Risk of burning. The surface temperature of the pump or pipe rises high along with liquid temperature in or right after operation.



⚠ CAUTION

- **Observe the motor rotational direction**
  Check the rotational direction of the pump. Clockwise seen from the motor end is a correct direction. Operation in a reverse direction may cause pump damage.



- **Closed-discharge operation is not allowed**
  Do not close a discharge line during operation. Otherwise, liquid leakage or pump head/motor/piping breakage may result due to overpressure.
  Do not close a suction line during operation. Otherwise, internal parts are excessively worn by friction heat and fatal pump damage results.



2. Commissioning

Always make commissioning when first mounting the pump in your system or resuming operation after a long period of stoppage.

■ Before operation

Operate the pump by the following procedure. Be sure to turn off main power.

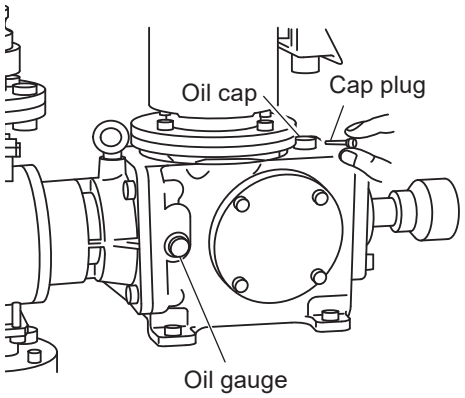

1. Check for transit damage, loose bolts and an oil leak.
2. Observe the specified power voltage. Check the nameplate of the motor. Electrical wiring must be correct. See the ***"4. Wiring"*** section on page 18 or motor manufacturer's instruction manuals.
3. Check for a liquid level in the supply tank and poor connections.
4. Check the oil gauge on the gear unit. An oil level should be at the middle of the gauge (marked in red).
5. Remove the cap plug before operation.
6. Check if the discharge and suction lines are laid correctly.

Operation

■ Starting process

Operate the pump by the following procedure.

	Operation procedure	Remarks
1	• Open the suction and discharge valves.	
2	• Turn on power to run the pump.	• Check the rotational direction of the motor. Clockwise seen from the motor end is a correct direction.
3	• Set the stroke length to 0%.	• See **"■ Stroke length adjustment"** on page 23 for detail.
4	• Run the pump for 5 minutes with 0% stroke length and check for abnormality.	• In cold climates, an electric current to the motor can double right after the start of operation. This overcurrent results when gear-oil temperature is too low. Run the pump with no discharge pressure until the oil warms up.
5	• Expel air from the pump head.	• Open an air vent line so that the discharge line is not pressurized. Increase the stroke length little by little until air is completely expelled.
6	• Set the stroke length to 100% and run the pump for 30-60 minutes (running-in).	• Check an electric current to the motor is rated value and the system for abnormality. Keep the air vent line open during this time period.
7	• Close the air vent line little by little and open a discharge line.	
8	• Use a calibration cylinder to measure discharge capacity. • Determine the discharge capacity at every stroke rate and then meet the specified discharge capacity.	• Repeat measurement. The pump and system are ok when the measured discharge capacity does not change. • Test data with our piping system is available but try to determine how much discharge capacity is obtained at what stroke rate by using your actual piping system.

■ Points to be checked

Check the following points during commissioning. If you notice any abnormal or dangerous conditions, suspend operation immediately and inspect/solve problems. See Troubleshooting on page 26 or contact us.

1	**Operating conditions** a. Check a liquid level in the supply tank and discharge capacity. b. Check the suction and discharge pressure with a pressure gauge. They must not exceed the maximum pressure. See the nameplate for detail. c. When the discharge capacity or discharge pressure falls down in operation, suspend operation immediately and check the pump and piping connections. d. Possibility of clogging or closed-discharge operation. Suspend operation immediately and remove problems when the discharge pressure rises sharply.
2	**Noise and vibration** Viscous liquid delivery with entrained air can be the root cause of noise or vibration.
3	**Pump/motor surface temperature** Check pump/motor surface temperature during commissioning. Stop operation if it is too high.
4	**Inlet/outlet connections** A small gap in between pipe connections can entrain air and reduce discharge capacity. Secure every connections.
5	**Air chamber** Liquid dissolves/reduces air volume in the air chamber. Periodically supply air to keep its performance.

3. Operation

Start full operation in your system. Observe the above instructions to keep the optimal operating conditions. If you notice any abnormal or dangerous conditions, suspend operation immediately and inspect/solve problems. See page 26 "Troubleshooting" or contact us.

4. Flow rate adjustment

Use the stroke length knob to determine the liquid volume per stroke.

■ Stroke length adjustment

The adjustment should be made while the pump is running. Do not rotate the knob beyond the max or min position. A flow rate does not change beyond these positions.

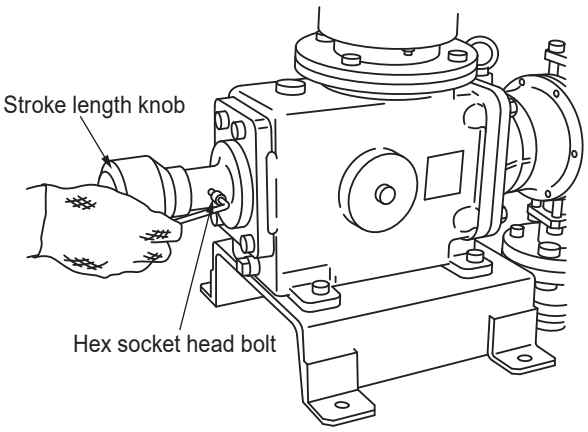

1. Loosen the hex socket head bolt.
2. Run the pump in the system and measure discharge capacity with a calibration cylinder.
3. Determine the optimal stroke length to obtain the specified discharge capacity. See "**■ Knob rotation and Stroke length**" to get a rough idea about knob rotation.
4. Tighten the hex socket head bolt to fix the length.

■ Knob rotation and Stroke length

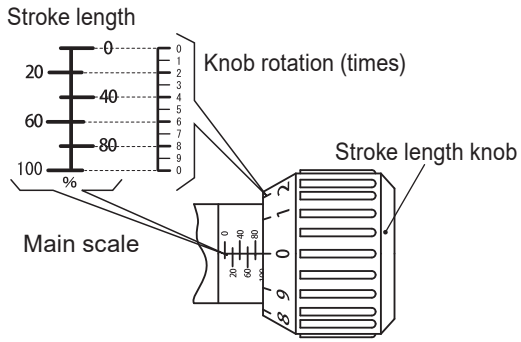

LK-5

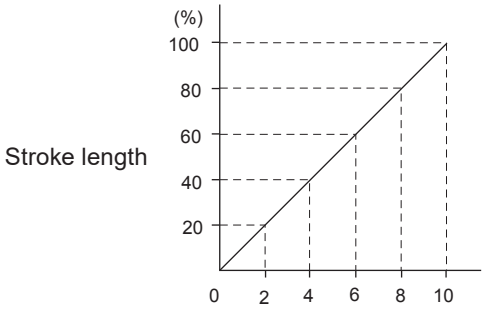

5. Before/After a long period of stoppage

■ Before a long period of stoppage

1. Solution in the discharge line may be under pressure. Release the pressure from the discharge line before disconnecting plumbing or disassembly of the pump to avoid solution spray.

2. Flush the inside of the pump and pipework with clean water or cleaning liquid.

3. Frozen liquid may damage the pump and piping. Drain liquid before leaving the pump/piping for a long time or use measures to prevent liquid from freezing in winter.

4. Temporally use the band heater to keep the liquid in the pump and piping warm when suspending operation just for a short period of time.

5. Set the stroke length to 100% in operation and then stop the motor. Open the motor fan cover and rotate the motor fan by hand until the diaphragm shaft is fully retracted (the lightest fan rotation is obtained at the full retraction; the SL knob becomes hard to rotate in between 90 and 100% as shortening the stroke length) in order to prevent the diaphragm deformation.
Run the pump with zero discharge-line pressure for about 5 minutes every 3 months in order to keep the motor bearing lubricated.

■ Resumption after stoppage

1. When operation is resumed after a short period of stoppage (within a week), the pump can start to run at any stroke length and discharge pressure. Do not forget to expel air before operation as necessary.

2. When operation is resumed after a long period of stoppage (a few weeks later), run the pump with 0% stroke length and zero discharge-line pressure, for a few minutes to lubricate the internal parts in the drive unit before full operation.

3. When operation is resumed after a long period of stoppage (a few months later), the flow rate may be too low to meet the specified discharge capacity due to diaphragm deformation. The diaphragm may recover its original shape after a few hours of running in.

Maintenance

1. Troubleshooting 26

2. Maintenance & Inspection..... 29

3. Spare & Wear parts 30

4. Dismantlement & Assembly 31

Maintenance

1. Troubleshooting

If you can not find out the root cause of failure, contact us.

States	Possible causes	Solutions
Motor does not starts to run.	Motor failure	Replace with new one.
	Disconnection	Reconnect motor wires or replace the motor.
	Power fuse has blown.	Inspect/solve the root cause of the blowout.
	Power voltage reduction	Inspect/solve the root cause of the reduction.
	Over pressure (discharge line)	Inspect/solve the root cause of the over pressure.
	Out of the rated voltage range	Inspect/solve the root cause of the abnormal power voltage.
Flow is too low.	NPSHr is not satisfied.	Review the pump and piping system to meet the NPSHr.
	Ball valve and valve seat have been worn.	Replace with new ones.
	Foreign matters in the ball valve	Take apart and clean the valve.
	Clogged suction line or strainer	Take apart and clean them.
	Stroke length knob is not set correct.	Set optimal stroke length.
	Stroke rate reduction	Check the power voltage, motor and gear unit.
	Over pressure (discharge line)	Inspect/solve the root cause of the over pressure.
	Air ingress from the suction line.	Check for loose connections and retighten as necessary.
	Different liquid is used.	Check liquid characteristics and pump specification.
	Pressure gauge has failed.	Replace with new one.
	Clogging in a pressure gauge	Remove clogging.
	A leak from a relief valve	Check the set pressure or secure connections.
	Damaged diaphragm	Replace with new one.
	Damaged gaskets or O rings	Replace with new ones.
	Entrained air in the pump head.	Perform degassing.
	Misarranged valve assembly	Rebuild it in correct order.
Flow is too high.	Stroke length knob is not set correct.	Determine optimal stroke length.
	Minimal differential pressure is not kept and overfeeding results.	Keep the minimal differential pressure.
	Different liquid is used.	Check liquid characteristics and pump specification.
Flow fluctuates.	NPSHr is not satisfied.	Review the pump and piping system to meet the NPSHr..
	Ball valve and valve seat have been worn.	Replace with new ones.
	Foreign matters in the ball valve	Take apart and clean the valve.
	Clogged suction line or strainer	Take apart and clean them.
	Minimal differential pressure is not kept and overfeeding results.	Keep the minimal differential pressure.
	Stroke rate reduction	Check the power voltage, motor and gear unit.
	Air ingress from the suction line.	Check for loose connections and retighten as necessary.
	Different liquid is used.	Check liquid characteristics and pump specification.
	A leak from a relief valve	Check the set pressure or secure connections.
	Damaged gaskets or O rings	Replace with new ones.
	Entrained air in the pump head.	Perform degassing.

Maintenance

States	Possible causes	Solutions
Motor over current	Motor failure	Replace with new one.
	Disconnection	Reconnect motor wires or replace the motor.
	Power voltage reduction	Inspect/solve the root cause of the reduction.
	Foreign matters in the ball valve	Take apart and clean the valve.
	Clogged suction line or strainer	Take apart and clean them.
	Over pressure (discharge line)	Inspect/solve the root cause of the over pressure.
	Out of the rated voltage range	Inspect/solve the root cause of the abnormal power voltage.
	Different liquid is used.	Check liquid characteristics and pump specification.
	Oil level, grade or quality is wrong.	Check if it is proper. Replace as necessary.
No discharge	NPSHr is not satisfied.	Review the pump and piping system to meet the NPSHr.
	Ball valve and valve seat have been worn.	Replace with new ones.
	Foreign matters in the ball valve	Take apart and clean the valve.
	Clogged suction line or strainer	Take apart and clean them.
	Air ingress from the suction line.	Check for loose connections and retighten as necessary.
	Different liquid is used.	Check liquid characteristics and pump specification.
	A leak from a relief valve	Check the set pressure or secure connections.
	Damaged diaphragm	Replace with new one.
	Entrained air in the pump head.	Perform degassing.
	Misarranged valve assembly	Rebuild it in correct order.
Discharge pressure is too low.	NPSHr is not satisfied.	Review the pump and piping system to meet the NPSHr..
	Ball valve and valve seat have been worn.	Replace with new ones.
	Foreign matters in the ball valve	Take apart and clean the valve.
	Clogged suction line or strainer	Take apart and clean them.
	Air ingress from the suction line.	Check for loose connections and retighten as necessary.
	Different liquid is used.	Check liquid characteristics and pump specification.
	Pressure gauge has failed.	Replace with new one.
	Clogging in a pressure gauge	Remove clogging.
	A leak from a relief valve	Check the set pressure or secure connections.
	Damaged diaphragm	Replace with new one.
	Entrained air in the pump head.	Perform degassing.
	Misarranged valve assembly	Rebuild it in correct order.

States	Possible causes	Solutions
Liquid leaks.	Clogged suction line or strainer	Take apart and clean them.
	Over pressure (discharge line)	Inspect/solve the root cause of the over pressure.
	Different liquid is used.	Check liquid characteristics and pump specification.
	Damaged diaphragm	Replace with new one.
	Damaged gaskets or O rings	Replace with new ones.
	Misarranged valve assembly	Rebuild it in correct order.
	Loose connection of the inlet and outlet	Tighten them as necessary.
	Loose pump-head-fixing-bolts	Tighten them as necessary.
A noise level is too high.	Motor failure	Replace with new one.
	NPSHr is not satisfied.	Review the pump and piping system to meet the NPSHr.
	Ball valve and valve seat have been worn.	Replace with new ones.
	Foreign matters in the ball valve	Take apart and clean the valve.
	Clogged suction line or strainer	Take apart and clean them.
	Over pressure (discharge line)	Inspect/solve the root cause of the over pressure.
	Oil level, grade or quality is wrong.	Check if it is proper. Replace as necessary.
	Misarranged valve assembly	Rebuild it in correct order.
Oil leaks.	Damaged gaskets or O rings	Replace with new ones.
No suction	NPSHr is not satisfied.	Review the pump and piping system to meet the NPSHr.
	Ball valve and valve seat have been worn.	Replace with new ones.
	Foreign matters in the ball valve	Take apart and clean the valve.
	Clogged suction line or strainer	Take apart and clean them.
	Air ingress from the suction line.	Check for loose connections and retighten as necessary.
	Damaged diaphragm	Replace with new one.
	Damaged gaskets or O rings	Replace with new ones.
	Entrained air in the pump head.	Perform degassing.
	Misarranged valve assembly	Rebuild it in correct order.
Gear unit temperature is too high.	Over pressure (discharge line)	Inspect/solve the root cause of the over pressure.
	Oil level, grade or quality is wrong.	Check if it is proper. Replace as necessary.

2. Maintenance & Inspection

⚠ WARNING

- **Turn off power before service**

  Risk of electrical shock. Be sure to turn off power to stop the pump and related devices before service is performed.


Turning off power

- **Wear protective clothing**

  Always wear protective clothing such as an eye protection, chemical resistant gloves, a mask and a face shield during disassembly, assembly or maintenance work. The specific solution will dictate the degree of protection. Refer to SDS precautions from the solution supplier.


Wear protective gear

- **Be sure to turn off all the related power supplies prior to any inspection/ maintenance and installation works (motor fan cover).**

  Working on the pump with power ON, any rotating part may catch the hand, finger, hair, or clothes, and it may result in serious injury.


Rotational direction

⚠ CAUTION

- **Do not touch the pump or pipe with bare hands**

  Risk of burning. The surface temperature of the pump or pipe rises high along with liquid temperature in or right after operation.


Do not touch

■ Daily inspection

1. Check whether the pump runs without abnormal noise or vibration.
2. Check that discharge pressure/capacity and a motor current value are as per specifications on the nameplate during operation.
3. Always check for leakage before pump operation. Do not run the pump when liquid leaks.
4. Check for a low oil level, oil leak and deterioration.
5. If a spare pump is stored, run it from time to time to keep it ready for operation at any time when needed.

■ Periodic inspection

1. Check wear parts such as valve set (a ball valve, valve guide, valve seat and O ring) and diaphragm for heavy damage or wear at least every 6 months. Note their lives change with operating conditions such as liquid characteristics and operating pressure.
2. Check pump head connections for a leak. Tighten loose connections to the specified torque (see page 34) or replace parts in question as necessary.

■ Oil replacement

Replace the reduction gear oil every year or when deteriorated.

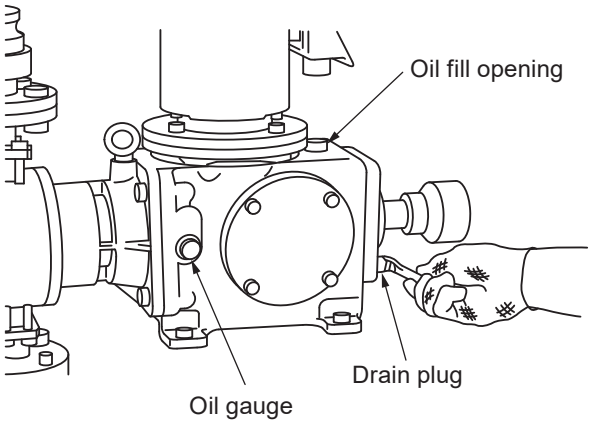

Oil company	Product name
MOBIL SEKIYU	Mobilgear 600 XP 220

1. Loosen the drain plug and release old oil.
2. Pour flushing oil through the oil fill opening and rinse the inside of the gear unit.
3. Repeat rinsing a few times.
4. Drain flushing oil and pour new gear oil through the opening until it comes to the middle of the oil gauge.
   <Specified oil volume>
   LK-A: 1.6L
   LK-B: 2.8L

NOTE: Wear protective clothing such as an eye protection, gloves, a mask and a face shield when handling pump. Observe local codes.

NOTE: Keep good ventilation in a storage area. Do not store oil in a flammable atmosphere or high temperature. Conform to local codes.

3. Spare & Wear parts

Appropriate spare parts are necessary for a long period of continuous operation. We recommend that wear parts always be in stock.

Part names	Q'ty	Estimated lives
Ball valve	2	1 year
Valve guide	2	1 year
Valve seat	2	1 year
O ring	4	1 year
Valve gasket (LK-A55/-A57 TC)	2	1 year
Diaphragm	1	4000 hours
Rear seat	1	4000 hours
Seal bellows	1	1 year

*Q'ty shows the required number of parts per pump.
*Estimated lives change with operating conditions.

4. Dismantlement & Assembly

See the exploded view of the pump head before disassembly. See "7. Part names" on page 11 for detail. Clean the inside of the pump head in advance. Be careful not to drop the pump head.

⚠WARNING

- Risk of electrical shock. Be sure to turn off power to stop the pump and related devices before service is performed.
- Solution in the discharge line may be under pressure. Release the pressure from the discharge line before disconnecting plumbing or disassembly of the pump to avoid solution spray.

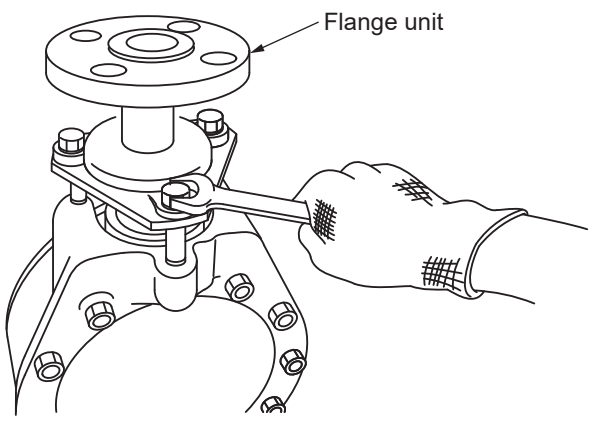

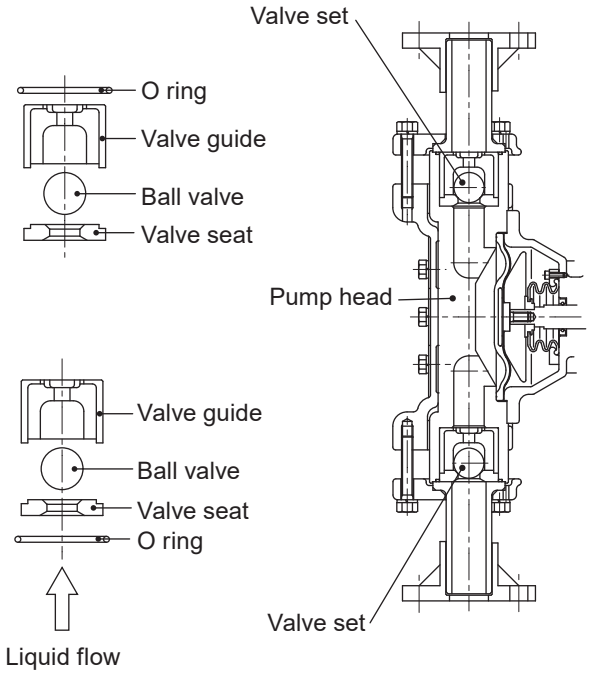

■ Valve set replacement/assembly/disassembly

1. Remove the discharge and suction line from the pump.

NOTE: Close a suction and a discharge valve fully.

2. Remove the hex. head bolts that are fixing the flange unit and take out the valve set (a valve guide, a ball valve and a valve seat).

NOTE: Solution in the discharge line may be under pressure. Release the pressure from the discharge line before disconnecting plumbing or disassembly of the pump to avoid solution spray.

NOTE: The valve set may be stuck in the flange unit.

NOTE: Replace a valve guide, ball valve, valve seat and O ring with new ones if they are damaged.

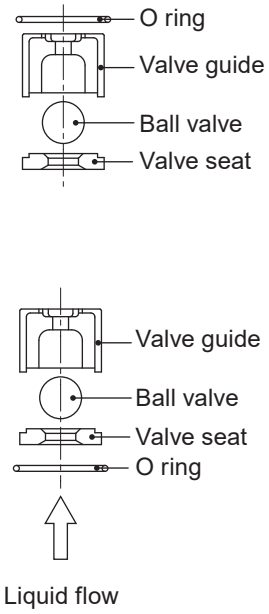

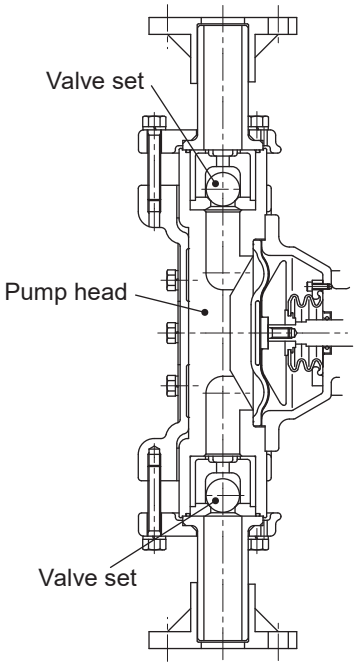

■ Valve set assembly process

1. Assemble the valve set. Note the valve guide, ball valve, valve seat and valve gasket have a mounting direction.

NOTE: Observe the mounting direction of the valve guide, ball valve, valve seat and valve gasket. Otherwise, a backflow, overpressure and motor/piping damage may result.

2. Place both the valve set in the inlet and the outlet of the pump head. Be sure to place an O ring and then tighten the flange units.

3. Connect the discharge line to the outlet and the suction line to the inlet via a flange gasket. Do not allow any gap between the connections.

NOTE: The connecting faces of the flange units must overlap each other without any interference when the connection is secured with bolts.

NOTE: Always fasten the flange units to the same tightening torque in diagonal order.

■ **Diaphragm replacement/assembly/disassembly**

⚠WARNING

- Risk of electrical shock. Be sure to turn off power to stop the pump and related devices before service is performed.
- Solution in the discharge line may be under pressure. Release the pressure from the discharge line before disconnecting plumbing or disassembly of the pump to avoid solution spray.

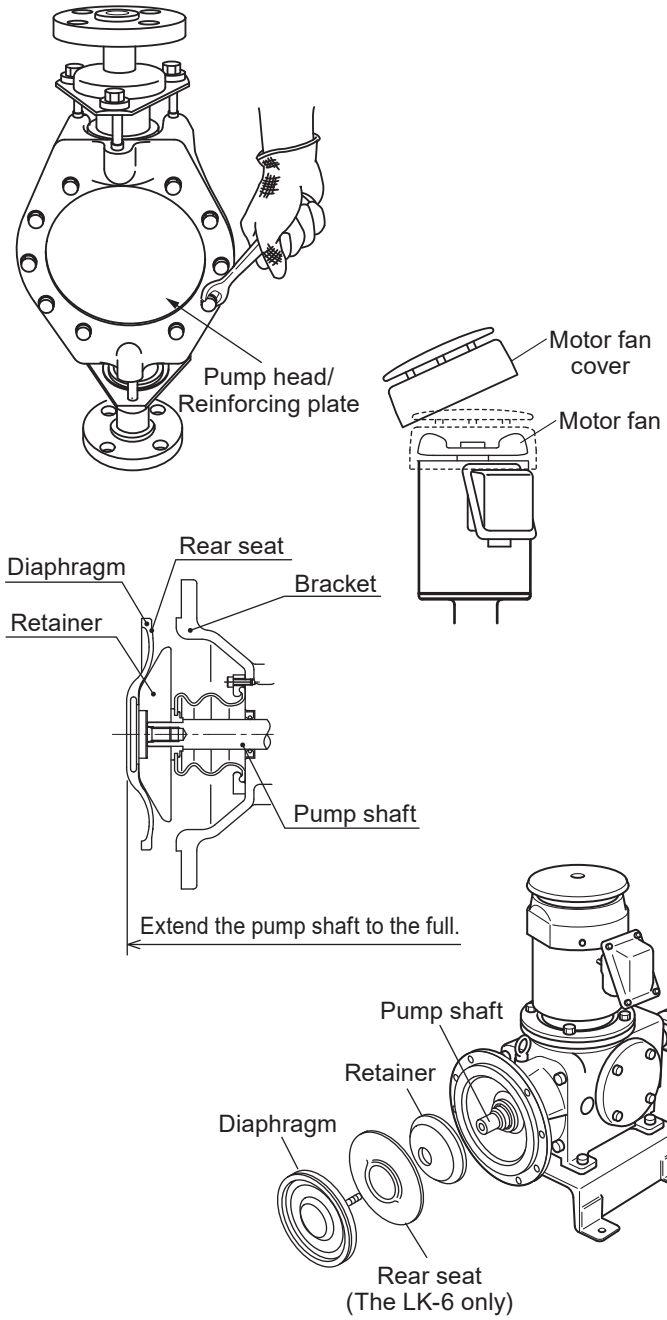

Disassembly process

1. Remove the discharge and suction line from the pump.
2. Remove the related bolts and take out the reinforcing plate and pump head.
3. Remove three related screws and take out the motor fan cover.
4. Rotate the motor fan by the hand to extend the pump shaft to the full.
5. Rotate the diaphragm anticlockwise and remove together with the rear seat and retainer.

NOTE: The LK-6 has a rear seat. Remove the rear seat as well.

NOTE: Check the diaphragm for damage and replace with new one as necessary.

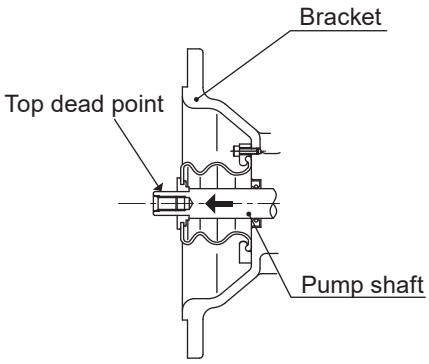

Assembly process

1. Check that the pump shaft is extended to the full.

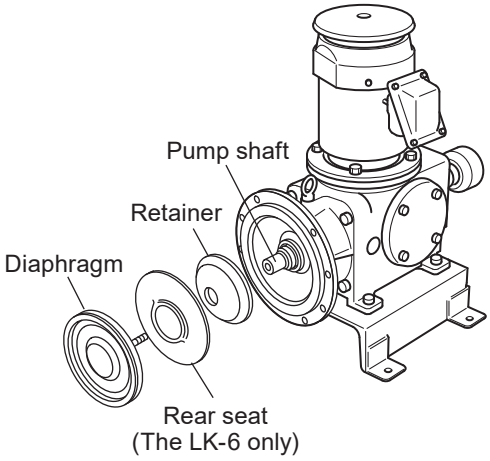

2. Fit the retainer into the pump shaft and screw the diaphragm into the pump shaft.

NOTE: The LK-6 has a rear seat. Take it in between the diaphragm and retainer.

NOTE: Push down the retainer as far as it will go. The retainer should not interfere with the diaphragm mounting.

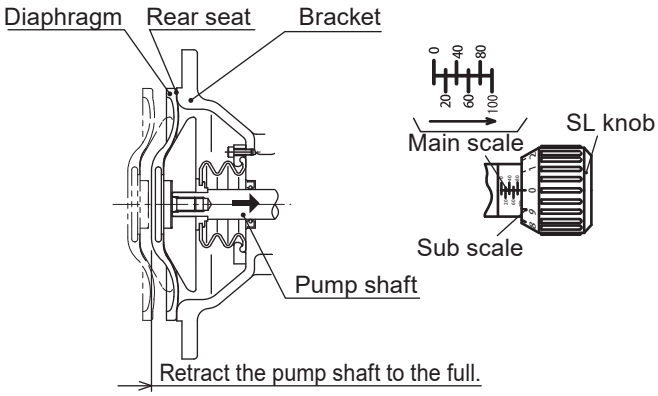

3. Set the stroke length to 100% and rotate the motor fan by the hand to retract the diaphragm to the full.

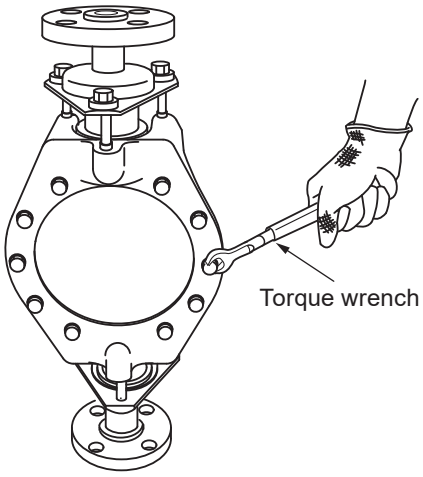

4. Mount the pump head and reinforcing plate with bolts. Tighten the bolts in diagonal order to the specified torque below. Do not allow any gap between the pump head and the bracket.

<Pump head tightening torque (RV)>

Model	Tightening torque
LK-5TC	11.8N•m
LK-6TC	13.7N•m

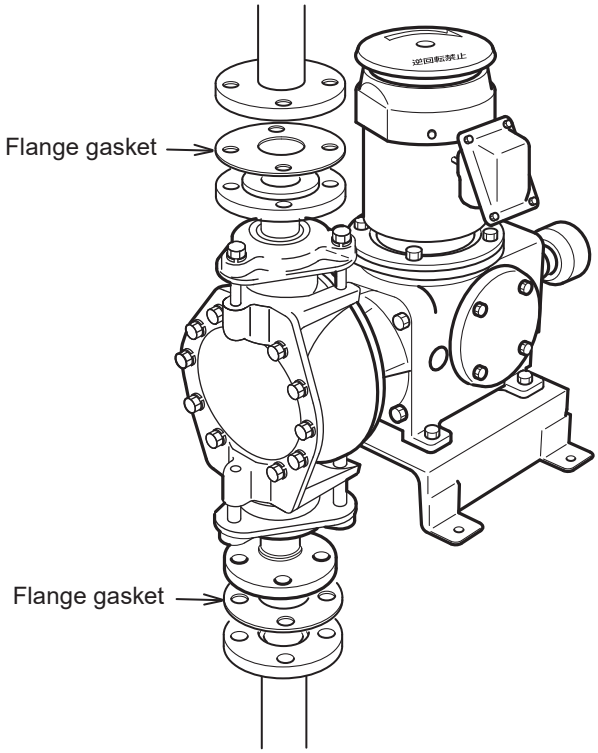

5. Fit and tighten the motor fan cover with screws.

6. Connect the suction and the discharge lines to the inlet and the outlet over the gaskets. Tighten the flange bolts to the same torque in diagonal order.

NOTE: Use measures to keep the pump connections fee from stress. Weight and thermal expansion/contraction of the piping can stress connection points.

Diagonal order

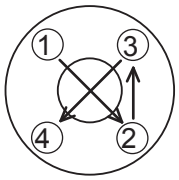

EC DECLARATION OF CONFORMITY

A copy of the original Declaration of Conformity

(SUPPLIER'S NAME)

WE

IWAKI CO.,LTD.

(ADDRESS)

6-6 2-CHOME KANDA-SUDACHO CHIYODA-KU TOKYO JAPAN

(PRODUCT)

DECLARE UNDER OUR SOLE RESPONSIBILITY THAT THE PRODUCTS

METERING PUMP

(MODEL NAME)

LK SERIES

TO WHICH THIS DECLARATION RELATES ARE IN CONFORMITY

WITH THE FOLLOWING STANDARDS OR DIRECTIVES AS FAR AS APPLICABLE

(DIRECTIVES)

MACHINERY DIRECTIVE 2006/42/EC (ANNEX IIA)
RoHS DIRECTIVE 2011/65/EU

(STANDARDS)

EN ISO12100: 2010 EN809: 1998 + A1: 2009 EN IEC63000: 2018

(A PERSON WHO IS AUTHORISED TO COMPILE THE TECHNICAL FILE IN THE COMMUNITY)

IWAKI EUROPE GMBH
SIEMENSRING 115 D-47877 WILLICH GERMANY

NOTE: THIS DECLARATION BECOMES INVALID IF TECHNICAL OR OPERATIONAL MODIFICATIONS ARE INTRODUCED WITHOUT THE MANUFACTURER'S CONSENT.

T. Sawada.

TSUTOMU SAWADA

DEPUTY SENIOR GENERAL MANAGER,

QUALITY ASSURANCE HEAD OFFICE

Tokyo, Sep. 13, 2021

(PLACE AND DATE OF ISSUE) **(NAME AND SIGNATURE OR EQUIVALENT MARKING OF AUTHORIZED PERSON)**

DOCUMENT NO. IS-51K-566-2

CE conformity

■ **Information on CE conformity of pump units when the motor is fitted by the customer (dealer/operator)**

We hereby confirm the CE conformity of our pump unit provided that the following criteria about intended use are satisfied as described in this instruction manual:

- Motor conformity in accordance with any relevant EC directives which are currently effective.
- The dimensions of a required motor flange and shaft must fit the specified pump.
- The motor must be installed to the pump according to this instruction manual.
- Guaranteed grounding
- The pump must not be repainted over our original upper coating.

Any reseller or dealer who connects the pump with a motor and markets it as a complete unit must conform to all relevant EC directives. In such cases, the reseller or dealer then becomes the manufacturer.

Waste Electrical and Electronic Equipment (WEEE)

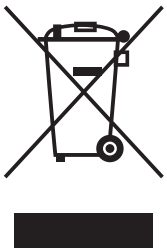

In accordance with the European Directive 2012/19/EU on waste electrical and electronic equipment, this product features the crossed-out wheelie bin symbol. When this product is disposed of in household wastes, toxic components included in it can cause major environmental and human health problems. Use appropriate waste collection systems for recovery and recycling. Contact your local distributor or nearest Iwaki company for the detailed collection systems.

IWAKI

https://www.iwakipumps.jp

IWAKI CO.,LTD. 6-6 Kanda-Sudacho 2-chome Chiyoda-ku Tokyo 101-8558 Japan
TEL: +81 3 3254 2935 FAX: +81 3 3252 8892

European Headquarter / IWAKI Europe GmbH
TEL: +49 2154 9254 0 FAX: +49 2154 9254 48
Germany / IWAKI Europe GmbH
TEL: +49 2154 9254 50 FAX: +49 2154 9254 55
The Netherlands / IWAKI Europe GmbH (Netherlands Branch)
TEL: +31 74 2420011 FAX: +49 2154 9254 48
Italy / IWAKI Europe GmbH (Italy Branch)
TEL: +39 0445 561219 FAX: +39 0445 569088
Spain / IWAKI Europe GmbH (Spain Branch)
TEL/FAX: +34 934 741 638
Poland / IWAKI Europe GmbH (East Europe Branch)
TEL: +48 12 347 0755 FAX: +48 12 347 0900
Denmark / IWAKI Nordic A/S
TEL: +45 48 242345
Finland / IWAKI Suomi Oy
TEL: +358 10 201 0490
Norway / IWAKI Norge AS
TEL: +47 23 38 49 00

Sweden / IWAKI Sverige AB
TEL: +46 8 511 72900
Belgium / IWAKI Belgium N.V.
TEL: +32 13 670200 FAX: +32 13 672030
France / IWAKI France S.A.
TEL: +33 1 69 63 33 70 FAX: +33 1 64 49 92 73
U.S.A. / IWAKI America Inc.
TEL: +1 508 429 1440 FAX: +1 508 429 1386
Brazil / IWAKI Do Brasil Comercio De Bombas Hidraulicas LTDA.
TEL/FAX: +55 19 3244 5900
China (Shanghai) / IWAKI Pumps (Shanghai) Co., Ltd.
TEL: +86 21 6272 7502 FAX: +86 21 6272 6929
China (Hong Kong) / IWAKI Pumps Co., Ltd.
TEL: +852 2607 1168 FAX: +852 2607 1000
China (Guangzhou) / GFTZ IWAKI Engineering & Trading Co., Ltd.
TEL: +86 20 84350603 FAX: +86 20 84359181
China (Shenzhen) / IWAKI Pumps (Shenzhen) Co., Ltd.
TEL: +86 0755 8656 3696

Singapore / IWAKI Singapore Pte Ltd.
TEL: +65 6316 2028 FAX: +65 6316 3221
Indonesia / IWAKI Singapore Pte Ltd. (Indonesia Office)
TEL: +62 21 6906606 FAX: +62 21 6906612
Malaysia / IWAKIm SDN. BHD.
TEL: +60 3 7803 8807 FAX: +60 3 7803 4800
Korea / IWAKI Korea Co., Ltd.
TEL: +82 2 6238 4800 FAX: +82 2 6238 4801
Taiwan / IWAKI Pumps Taiwan Co., Ltd.
TEL: +886 2 8227 6900 FAX: +886 2 8227 6818
Thailand / IWAKI (Thailand) Co., Ltd.
TEL: +66 2 322 2471 FAX: +66 2 322 2477
Australia / IWAKI Pumps Australia Pty Ltd.
TEL: +61 2 9899 2411 FAX: +61 2 9899 2421

T1034-4 '26/09