IWAKI PUMPS

IWAKI Metering Pump

LK-F (Europe)

Instruction Manual

⚠Read this manual before use of product

Thank you for selecting the Iwaki Mechanical-driven Diaphragm Type Metering Pump model LK-F. This instruction manual has been prepared to ensure correct and safe handling of the pump. Please read this manual carefully and thoroughly prior to operating the pump. Pay special attention to the "Safety Instruction to Prevent Personal Injuries," "Warning," and "Caution" messages included in this manual.

This instruction manual should be kept by each end user and within reach of the actual operator, for quick reference when needed.

Contents

IMPORTANT INSTRUCTIONS 1
Safety Instructions to Prevent Personal Injuries

OUTLINE OF PRODUCT 6
1. Before Using Pump 7
2. Operating Principle 8
3. Identification Codes 8
4. Specifications and Outer Dimensions 9
5. Names of Parts 14
6. Description on Main Unit and Label 23
7. Precautions for use 24

PUMP OPERATION 25
1. Handling Instructions 26
2. Installation 28
3. Piping 29
4. Wiring 31
5. Operation Step 31

MAINTENANCE 35
1. Causes of Trouble and Troubleshooting .. 36
2. Maintenance and Inspection 38
3. Consumable Parts 39
4. Disassembly and Assembly 40

EC DECLARATION OF CONFORMITY 43
CE conformity 44
Waste Electrical and Electronic Equipment (WEEE) 44

Please contact the Iwaki sales office or Iwaki dealer for any inquiries or questions regarding this product.

Important instructions

For the Safe and Correct Handling of the Pump

- "Safety Instruction" section deals with important details about handling of the product. Before use, read this section carefully for the prevention of personal injury or property damage.
- Observe the instructions accompanied with "WARNING" or "CAUTION" in this manual. These instructions are very important for protecting users from dangerous situations.
- The symbols on this instruction manual have the following meanings:

⚠ **WARNING**	**Nonobservance or misapplication of "Warning" sections could lead to a serious accident which may result in death.**
⚠ **CAUTION**	**Nonobservance or misapplication of "Caution" sections could lead to personal injury or property damage.**

Types of Symbols



Indicates that "Warning" or "Caution" must be exercised. Inside this triangle, a concrete and practical image provided as a warning or caution message is depicted.



Indicates a prohibited action or procedure. Inside or near this circle, a concrete and practical image of the activity to be avoided is depicted.



Indicates an important action or procedure which must be performed or carried out without fail. Failure to follow the instructions herein can lead to malfunction or damage to the pump.

⚠ Export Restrictions

Technical information contained in this instruction manual might be treated as controlled technology in your countries, due to agreements in international regime for export control. Please be reminded that export license/permission could be required when this manual is provided, due to export control regulations of your country.

Safety instructions

⚠WARNING

- **Turn off power before service**
  Risk of electrical shock. Be sure to turn off power to stop the pump and related devices before service is performed.


Requirement

- **Stop operation**
  If you notice any abnormal or dangerous conditions, suspend operation immediately and inspect/solve problems.


Requirement

- **Do not use the pump in any condition other than its intended purpose**
  The use of the pump in any conditions other than those clearly specified may result in failure or injury. Use this product in specified conditions only.


Prohibited

- **Do not modify the pump**
  Alterations to the pump carry a high degree of risk. It is not the manufacturer's responsibility for any failure or injury resulting from alterations to the pump.


Do not remodel

- **Wear protective clothing**
  Always wear protective clothing such as an eye protection, chemical resistant gloves, a mask and a face shield during disassembly, assembly or maintenance work. The specific solution will dictate the degree of protection. Refer to SDS precautions from the solution supplier.


Wear protectors

- **Stay out from under suspended loads**
  Risk of personal injury. Keep away from the pump while it is lifted up.


Prohibited

- **Do not damage the power cable**
  Do not pull, knot or crush the power cable. Damage to the power cable could lead to a fire or electrical shock if cut or broken.


Prohibited

- **Do not stand on the pump**
  Injury or damage may result when the pump turns over.


Prohibited

- **Do not get access to the inside of the drive unit during operation**
  Risk of personal injury. A reciprocating diaphragm/shaft may catch the finger or hand.


Caution

Safety instructions

⚠WARNING

- **Do not replace the motor fan cover in operation**

  Any rotating part may catch the hand, finger, hair, or clothes, and it may result in serious injury.


Caution

- **Qualified personnel only**

  The pump should be handled or operated by qualified personnel with a full understanding of the pump. Any person not familiar with the product should not take part in the operation or maintenance of the pump.


Requirement

- **Before starting the pump**

  Ensure no one is around the pump before connecting the power. The pump does not have an ON-OFF switch and starts automatically when the power cable is plugged in.


Requirement

- **Closed-discharge operation is not allowed**

  Do not close a discharge line during operation. Otherwise, liquid leakage or pump-head/motor/piping breakage may result due to overpressure.


Prohibited

Safety instructions

⚠CAUTION

- **Use specified power only**

  Do not apply power other than that specified on the nameplate. Otherwise, failure or fire may result. Ensure the pump is properly grounded.


Requirement

- **Ventilation**

  Fumes or vapours can be hazardous with certain solutions. Ensure proper ventilation at the operation site.


Requirement

- **Do not install/store the pump:**
  - In a flammable/explosive/corrosive atmosphere.
  - In a dusty/humid environment.
  - Where ambient temperature can exceed 0-40ºC.
  - In direct sunlight or wind & rain.
  - Under mechanical vibrations


Prohibited

- **Spill precautions**

  Ensure protection and containment of solution in the event of plumbing or pump damage (secondary containment).


Requirement

- **Do not touch the pump or pipe with bare hands**

  Risk of burns. The surface temperature of the pump or piping becomes very high during and immediately after operation, depending on the liquid temperature.


Caution

- **Do not bring the pump close to a flammable substance**

  Keep the pump away from a flammable substance for the prevention of fire. Do not allow a leak of lubricating oil. Observe local rules and regulations for handling of oils.


Fire ban

- **Grounding**

  Risk of electric shock! Always properly ground the pump. Conform to local electric codes.


Grounding

- **Install a GFCI (earth leakage breaker)**

  An electrical failure of the pump may adversely affect other devices on the same line. Purchase and install an earth leakage breaker separately.


Electrical shock

Safety instructions

⚠CAUTION

- **Remove foreign matter**
  If foreign matter enters the pump, turn off the power and clean the pump. Otherwise, the pump may be damaged.



- **Preventative maintenance**
  Follow instructions in this manual for replacement of wear parts. Do not disassemble the pump beyond the extent of the instructions.



- **Do not use a damaged pump**
  Use of a damaged pump could lead to an electric shock or death.



- **Disposal of a used pump**
  Dispose of any used or damaged pump in accordance with local rules and regulations. See the last page of the manual to comply with the European Directive 2012/19/EU on waste electrical and electronic equipment.



- **Do not cover the pump with a cloth**
  Covering the pump may cause heat to build up in the motor, resulting in fire or electrical/mechanical failure.



- **Non freezing**
  Frozen liquid may damage the pump and piping. Drain liquid before leaving it for a long time or use measures to prevent liquid from freezing in winter.



- **Pressure removal**
  Solution in the discharge line may be under pressure. Release the pressure from the discharge line before disconnecting plumbing or disassembly of the pump to avoid solution spray.



- **Use a proven chemically-resistant tube**
  The 4m PVC braided tube attached, for example, may be chemically attacked especially with sodium hypochlorite. Use a proven chemical resistant tube if an aggressive chemical is used.



OUTLINE OF PRODUCT

1. Before Using Pump 7

2. Operating Principle 8

3. Identification Codes 8

4. Specifications and Outer Dimensions..... 9

5. Name of Parts..... 14

6. Description on Main Unit and Label.. 23

7. Precautions for use 24

1. Before Using Pump

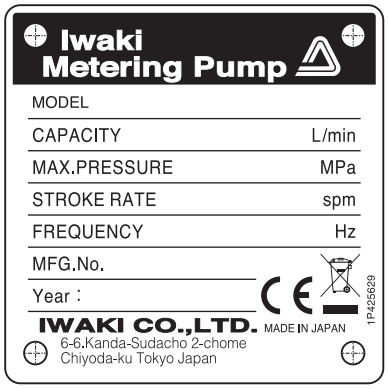

1. Check if the delivery is correct

Open the package and check that the product conforms to your order. If any problem or inconsistency is found, immediately contact your distributor.

1. Check the nameplate to see if the information such as model codes, discharge capacity, discharge pressure and stroke rate are as ordered.
2. Check for transit damage, deformation, and loose bolts.

NOTE: The pump may fall over when the package is opened with no supports. Hold the pump for the prevention of personal injury.

NOTE: When the pump is lifted, lift it up horizontally so that the lubrication oil will not leak out of the pump drive unit.

*The CE marking on our product(s) is for us to market the product(s) into the European market, however, the CE marking does not ensure any safety or conformity of the product(s) outside the European market.
When the pump is incorporated into the equipment marketed in the European market, such equipment must meet all the requirements of applicable directives.
In such a case, any person who places the equipment on the market must carry a CE mark on the equipment as a manufacturer.

2. Check accessories are complete

Check the table below to see if there is no missing part.

	Model	V6H/VCH	V6T/VCT/TCT	S6
Standard	M8×25 bolts (×4)	✔	✔	✔
	BVC-1P (×1)	✔	—	—
	4m braided tube (×1)	✔	—	—
	S-V4H or S-V12H (×1)	✔	—	—
Option	Pump base	Options are provided if requested.		
	Foundation bolts/nuts (×4)			

*The parenthetic value represents the number of parts attached to a pump.
*The BVC-1P is not attached to the LK-47.
*Flange units are packed separately for all the V6T, VCT and TCT types.

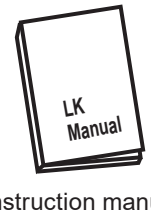

Instruction manual

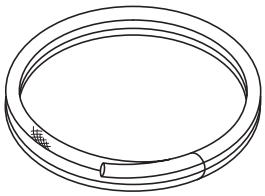
4m braided tube

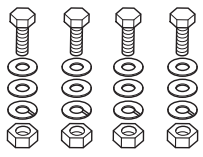
M8×25 mounting bolts

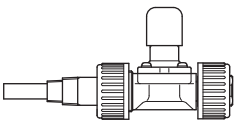
BVC-1P back pressure valve


S-V4H/S-V12H
strainer

2. Operating Principle

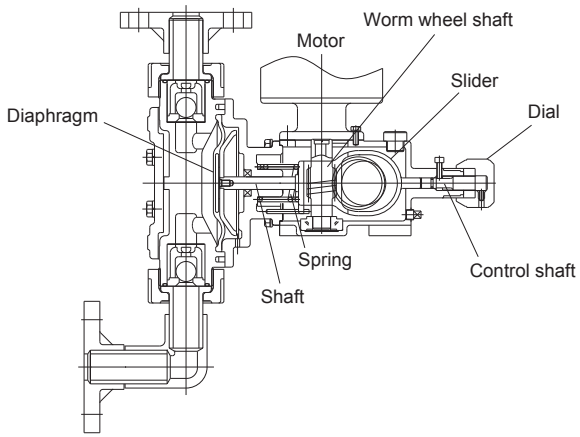

The rotation of the motor is reduced by means of the worm and wheel. The rotary motion is changed to a reciprocating motion by the spring-back mechanism (including the worm wheel shaft, slider, spring, etc.). The reciprocating motion is transmitted to the diaphragm directly connected with the shaft, changing the volume inside the pump chamber. Thus, variation of the volume inside the pump chamber and the functioning of the valves in the pump head produce pump operation.

For adjusting the stroke length, the adjusting dial fixed on the control shaft is rotated to change the return of the slider.

3. Identification Codes

LK - F 31 VC H - S
a b c d e

a. Series
LK-F type series

b. Type symbol
Refer to the "4. Specifications and Outer Dimensions" section on the next page.

c. Material symbol
Refer to the material table on the next page for the wet end codes (VC, V6, TC, and S6).

d. Connection
No code: Flange (JIS) T: Flange (DIN) H: Hose

e. Special symbol
S: Special specification

■ Standard Material

Material symbol			VC	V6	TC	S6
Part	Pump head		PVC		PVDF/CFRPVDF	SUS316
	Valve ball		CE	SUS316 EQUIVALENT	CE	SUS316 EQUIVALENT
	Valve seat	Type 11 to 32	FKM	EPDM	FKM	SUS316
		Type 45 to 57	PVC		CFRPVDF	SUS316
	O ring		FKM	EPDM	FKM	-
	Valve gasket		PTFE			
	Diaphragm		PTFE+EPDM			

CE: Alumina ceramic

(Note) For the actual names of the parts, refer to a paragraph which deals with the parts.

4. Specifications and Outer Dimensions

Model	Capacity L/min		Allowable pressure limit MPa		Stroke speed spm		Connection			
							Flange (Nominal dia)			Hose
	50Hz	60Hz	VC/V6/TC	S6	50Hz	60Hz	VC/V6	S6	TC	VC/V6
LK-F 11	0.020	0.024	1.0	1.5	48	58	DIN PN10 DN15	DIN PN16 DN15	DIN PN16 DN15	I.D.4mm O.D.9mm
21	0.050	0.060	1.0	1.5	48	58				
22	0.10	0.12	1.0	1.5	96	116				
31	0.25	0.30	1.0	1.5	48	58				I.D.12mm O.D.18mm
32	0.50	0.60	1.0	1.5	96	116				
45	0.85	1.0	1.0	1.5	48	58				
47	1.7	2.0	0.8	0.8	96	116				
55	2.8	3.3	0.5	0.5	48	58	DIN PN10 DN25		DIN PN16 DN25	
57	6.0	7.2	0.3	0.3	96	116				

(Note) Noise level: 75dB (A)

■ Outer dimensions

LK-F11, 21, 22, 31, 32, 45, 47, 55, 57 VC, V6

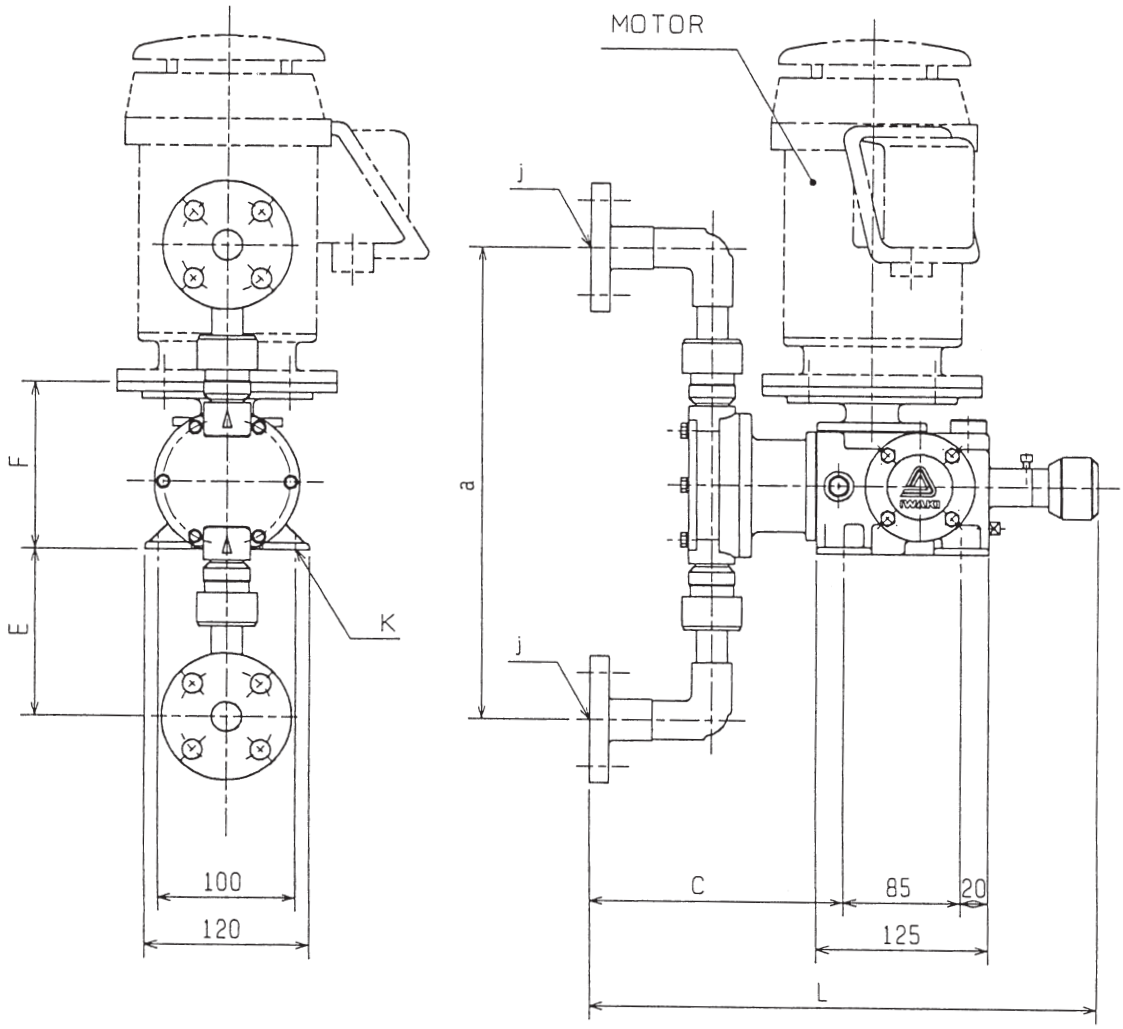

Model	L	a	C	E	F	j	K
LK-F11, VC, V6	363	272	183	86	123	15	4 - ø 9
LK-F21, 22, VC, V6	363	290	183	95	123	15	4 - ø 9
LK-F31, 32, VC, V6	366	350	186	125	123	15	4 - ø 9
LK-F45, 47, VC, V6	370	369	188	135	123	15	4 - ø 9
LK-F55, 57, VC, V6	395	350	211	125	123	25	4 - ø 9

■ Outer dimensions

LK-F11, 21, 22, 31, 32, 45, 47, 55, 57 VCH, V6H

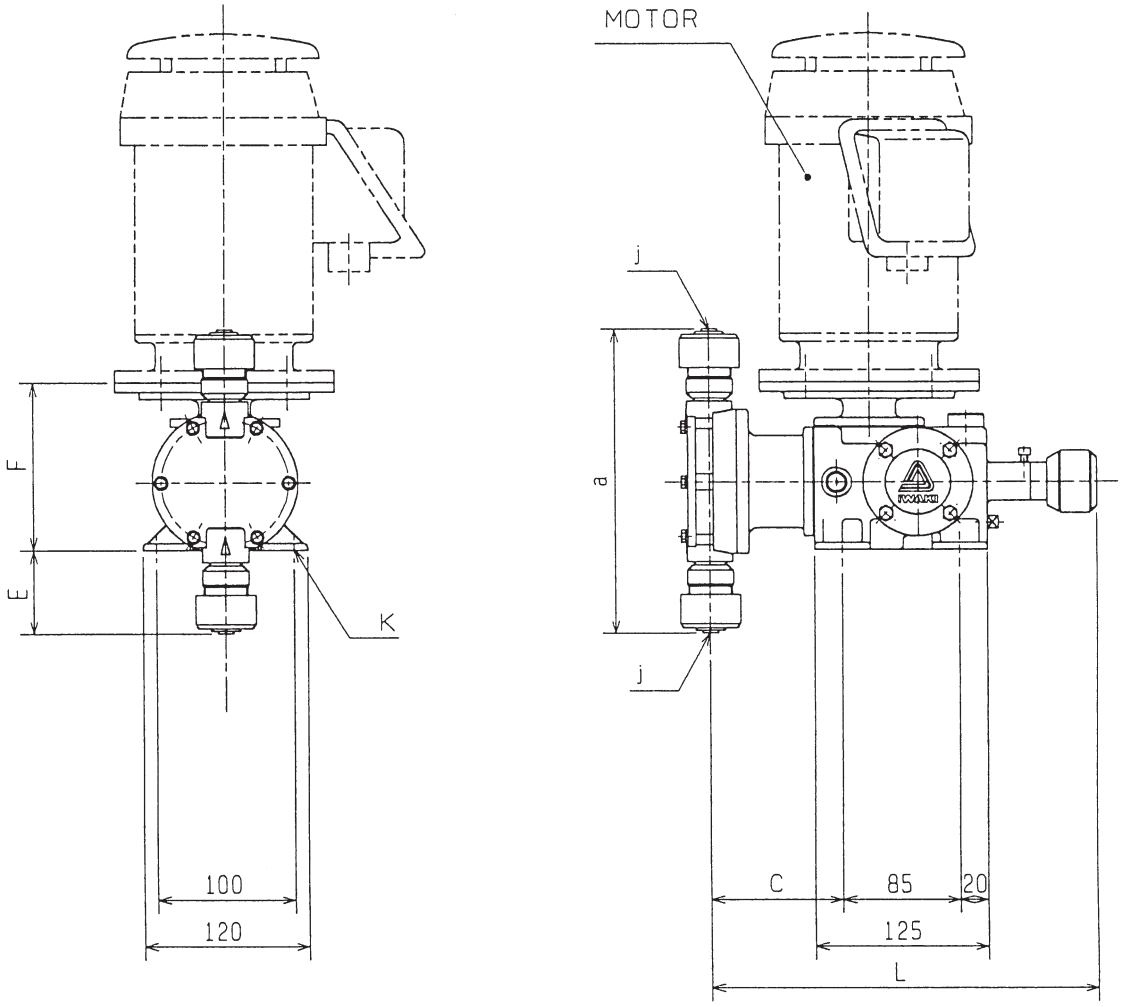

Model	L	a	C	E	F	j	K
LK-F11, VC, V6	275	146	95	23	123	ø 4 × ø 9	4 - ø 9
LK-F21, 22, VC, V6	275	164	95	32	123	ø 4 × ø 9	4 - ø 9
LK-F31, 32, VC, V6	277	224	97	62	123	ø 12 × ø 18	4 - ø 9
LK-F45, 47, VC, V6	281	249	99	75	123	ø 12 × ø 18	4 - ø 9
LK-F55, 57, VC, V6	300	292	115	96	123	ø 12 × ø 18	4 - ø 9

■ Outer dimensions

LK-F11, 21, 22, 31, 32, 45, 47, 55, 57 TC

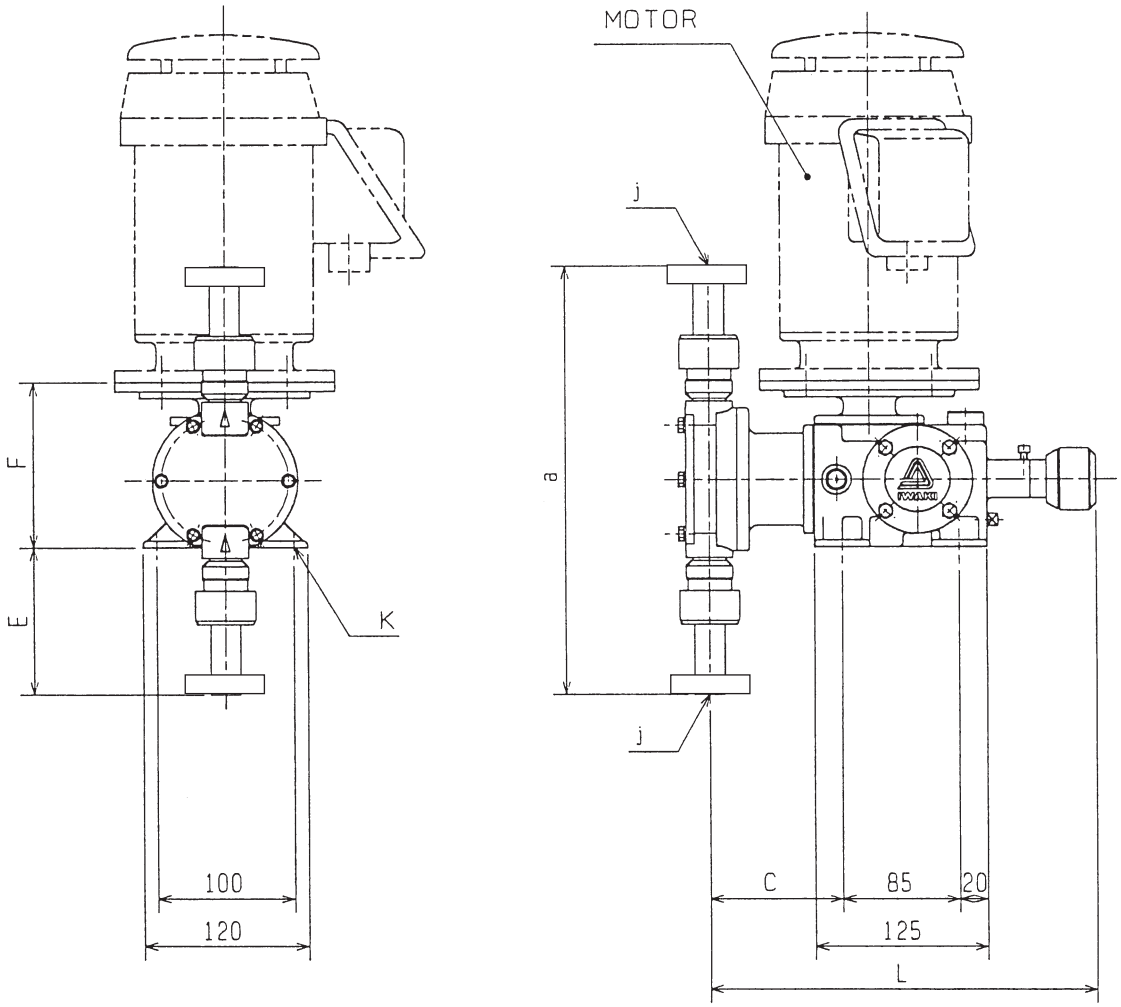

Model	L	a	C	E	F	j	K
LK-F11, TC	275	256	94	78	123	16	4 - ø 9
LK-F21, 22, TC	275	273	95	86	123	16	4 - ø 9
LK-F31, 32, TC	277	332	97	116	123	16	4 - ø 9
LK-F45, 47, TC	282	353	99	126	123	16	4 - ø 9
LK-F55, 57, TC	299	325	114	113	123	25	4 - ø 9

■ Outer dimensions

LK-F11, 21, 22, 31, 32, 45, 47, 55, 57 S6

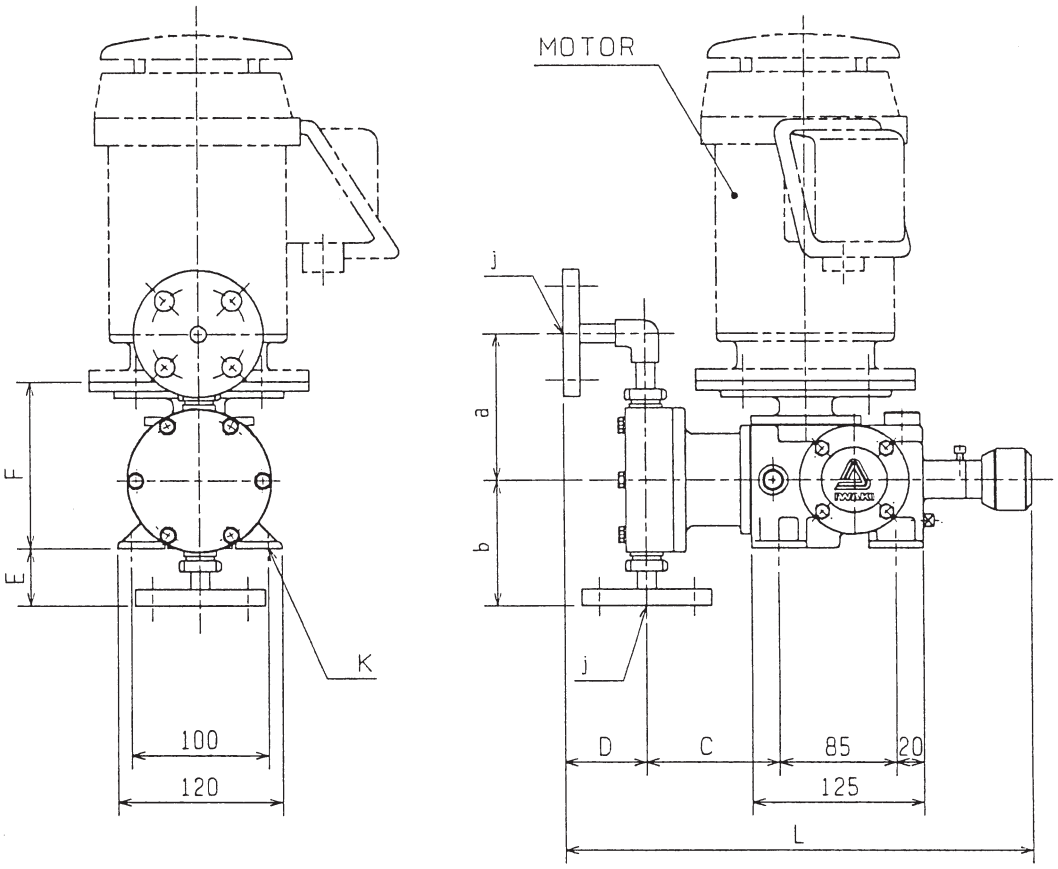

Model	L	a	b	C	D	E	F	j	K
LK-F11 S6	332	86	70	92	60	20	123	15	4 - ø 9
LK-F21, 22 S6	332	91	75	92	60	25	123	15	4 - ø 9
LK-F31, 32 S6	337	109	92	97	60	42	123	15	4 - ø 9
LK-F45, 47 S6	343	140	130	101	60	80	123	15	4 - ø 9
LK-F55, 57 S6	399	208	160	111	104	110	123	25	4 - ø 9

5. Names of Parts

■ LK-F11, 21, 22, 31, 32 VC, V6

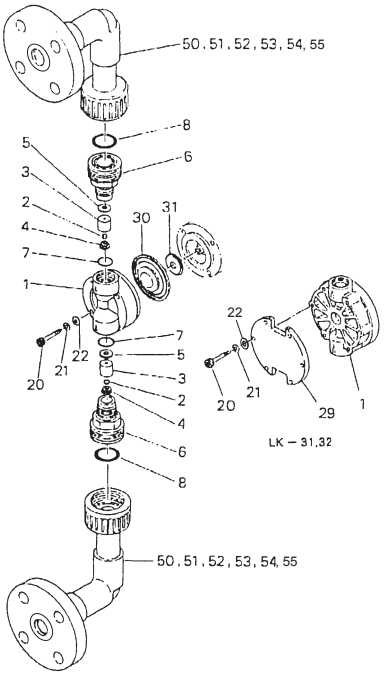

No.	Parts name	Q'ty	Material	
			VC	V6
1	Pump head	1	PVC	PVC
2	Valve (ball check)	2	ALUMINA CERAMIC	SUS316 EQUIVALENT
3	Valve guide	2	PVC	PVC
4	Valve seat	2	FKM	EPDM
5	Valve gasket	2	PTFE	PTFE
6	Adapter	2	PVC	PVC
7	O-ring (S-14*)	2	FKM	EPDM
8	O-ring (P-20)	2	FKM	EPDM

*P-16 O ring for the LK-31/-32

No.	Parts name	Q'ty	Material	Remarks		
				LK-F11	LK-F21, 22	LK-F31, 32
20	Hex. socket bolt	–	STNLS STL	M4 × 35 4PCS	——	——
20	Hex. head bolt	–	STNLS STL	——	M5 × 30 4PCS	M5 × 45 6PCS
21	Spring washer	–	〃	M4 4PCS	M5 4PCS	M5 6PCS
22	Plate washer	–	〃	M4 4PCS	M5 4PCS	M5 6PCS
29	Reinforcing plate	–	Steel	——	——	1PC
30	Diaphragm	1	PTFE+EPDM			
31	Retainer	1	SUS304			
50	Nut*	2	PVC			
51	Union (socket)*	2	〃			
52	Elbow*	2	〃			
53	Pipe*	2	〃			
54	Flange*	2	〃			
55	Flange adapter*	2	〃			

Note: The parts asterisked (*) are supplied as the flange unit.

■ LK-F11, 21, 22, 31, 32 V6H, VCH

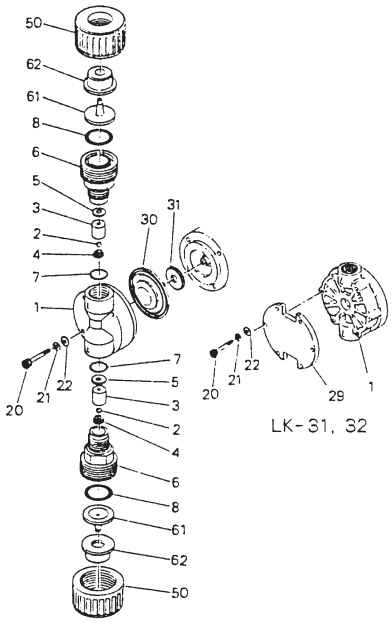

No.	Parts name	Q'ty	Material	
			VC	V6
1	Pump head	1	PVC	PVC
2	Valve (ball check)	2	ALUMINA CERAMIC	SUS316 EQUIVALENT
3	Valve guide	2	PVC	PVC
4	Valve seat	2	FKM	EPDM
5	Valve gasket	2	PTFE	PTFE
6	Adapter	2	PVC	PVC
7	O-ring (S-14*)	2	FKM	EPDM
8	O-ring (P-20)	2	FKM	EPDM

*P-16 O ring for the LK-31/-32

No.	Parts name	Q'ty	Material	Remarks		
				LK-F11	LK-F21, 22	LK-F31, 32
20	Hex. socket bolt	–	STNLS STL	M4 × 35 4PCS	———	———
20	Hex. head bolt	–	STNLS STL	———	M5 × 30 4PCS	M5 × 45 6PCS
21	Spring washer	–	〃	M4 4PCS	M5 4PCS	M5 6PCS
22	Plate washer	–	〃	M4 4PCS	M5 4PCS	M5 6PCS
29	Reinforcing plate	–	Steel	———	———	1PC
30	Diaphragm	1	PTFE+EPDM			
31	Retainer	1	SUS304			
50	Nut	2	PVC			
61	Tube insert	2	〃			
62	Ferrule	2	Steel			

■ LK-F45, 47, 55, 57 V6H, VCH

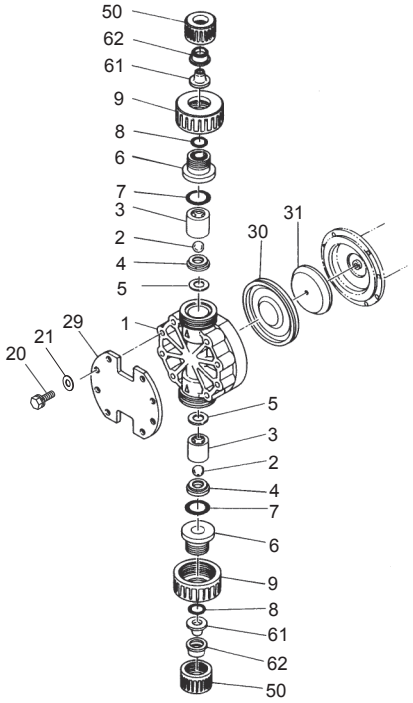

No.	Parts name	Q'ty	Material	
			VCH	V6H
1	Pump head	1	PVC	PVC
2	Valve (ball check)	2	ALUMINA CERAMIC	SUS316 EQUIVALENT
3	Valve guide	2	PVC	PVC
4	Valve seat	2	PVC	PVC
5	Valve gasket	2	PTFE	PTFE
6	Adapter	2	PVC	PVC
7	O-ring (P-32*)	2	FKM	EPDM
8	O-ring (P-20)	2	FKM	EPDM
9	Nut	2	PVC	PVC

*P-38 O ring for the LK-55/-57

No.	Parts name	Q'ty	Material	Remarks	
				LK-F45, 47	LK-F55
20	Hex. head bolt	8	STNLS STL	M8 × 60	M8 × 75
21	Spring washer	8	〃		
29	Reinforcing plate	1	———	Steel	FC200
30	Diaphragm	1	PTFE+EPDM		
31	Retainer	1	SUS304		
50	Nut	2	PVC		
61	Tube insert	2	〃		
62	Ferrule	2	Steel		

■ LK-F45, 47, 55, 57 VC, V6

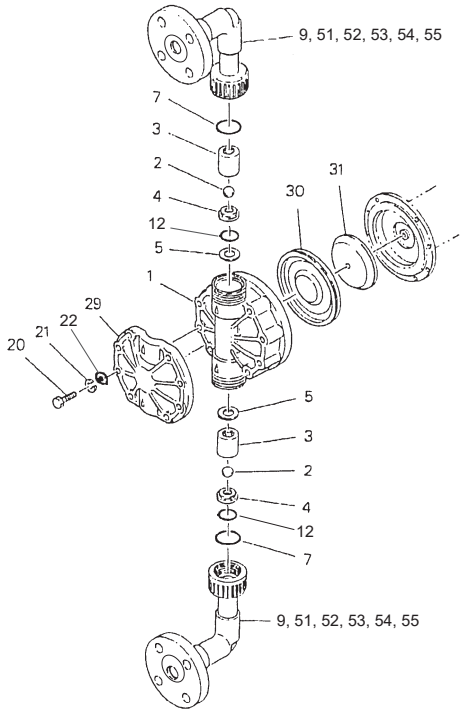

No.	Parts name	Q'ty	Material		Remarks	
			VC	V6	LK-F45, 47	LK-F55, 57
1	Pump head	1	PVC	PVC		
2	Valve (ball check)	2	ALUMINA CERAMIC	SUS316 EQUIVALENT		
3	Valve guide	2	PVC	PVC		
4	Valve seat	2	PVC	PVC		
5	Valve gasket	2	PTFE	PTFE		
7	O-ring	2	FKM	EPDM	P-32	P-38
12	O-ring	2	FKM	EPDM	None	P-26

No.	Parts name	Q'ty	Material	Remarks	
				LK-F45, 47	LK-F55, 57
20	Hex. head bolt	8	STNLS STL	M8 × 60	M8 × 75
21	Spring washer	8	〃	M8	M8
22	Plain washer	8	〃	None	M8
29	Reinforcing plate	1	——	Steel	FC200
30	Diaphragm	1	PTFE+EPDM		
31	Retainer	1	SUS304		
9	Nut*	2	——	PVC	GFRPP
51	Union (socket)*	2	PVC		
52	Elbow*	2	〃		
53	Pipe*	2	〃		
54	Flange*	2	〃		
55	Flange adapter*	2	〃		

Note: The parts asterisked (*) are supplied as the flange unit.

■ LK-F11, 21, 22, 31, 32 TC

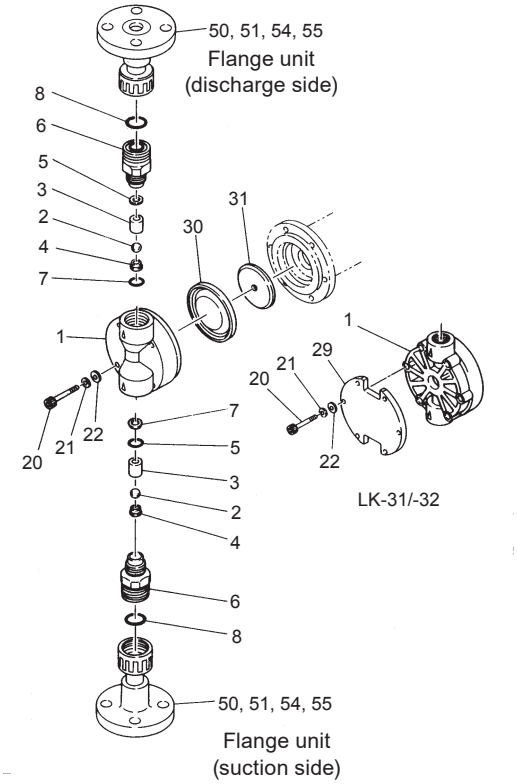

No.	Names	Q'ty	Materials	Remarks
1	Pump head	1	PVDF	
2	Valve	2	Alumina ceramic	
3	Valve guide	2	PVDF	
4	Valve seat	2	FKM	
5	Valve gasket	2	PTFE	
6	Adapter	2	PVDF	
7	O ring	2	FKM	S-14*1
8	O ring	2	FKM	P-20
20	Hex head bolt*2	4*5	STNLS STL	M4×35*3
21	Spring washer	4*5	STNLS STL	M4*4
22	Plate washer	4*5	STNLS STL	M4*4
29	Reinforcing plate (LK-31/-32)	1	SS400	
30	Diaphragm	1	PTFE/EPDM	
31	Retainer plate	1	SUS304	
50	Nut*6	2	PVDF	
51	Union*6	2	PVDF	
54	Flange*6	2	PPG	
55	Flange adapter*6	2	PVDF	

*1P-16 O rings for the LK-31/-32
*2Hex bolts for the LK-31/-32
*3M5×30 for the LK-21/-22 and M5×45 for the LK-31/-32
*4M5 washers for the LK-21/-22/-31/-32
*5The number of parts are 6 for the LK-31/-32
*6The parts asterisked (*) are supplied as the flange unit.

■ LK-F45, 47 TC

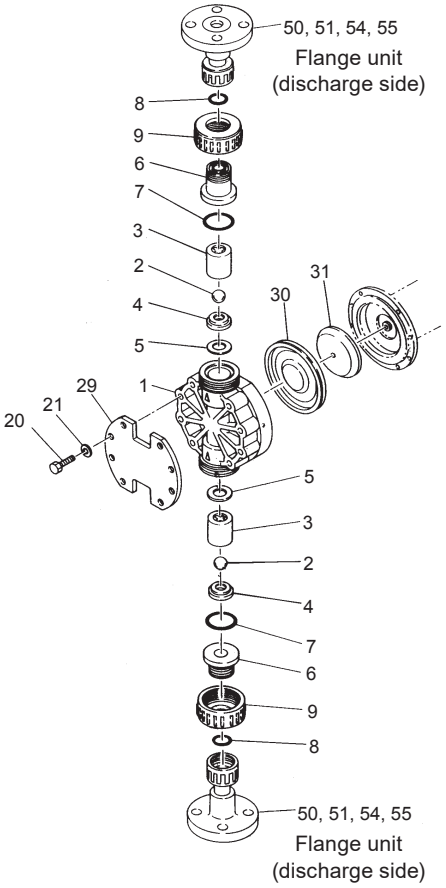

No.	Names	Q'ty	Materials	Remarks
1	Pump head	1	CFRPVDF	
2	Valve	2	Alumina ceramic	
3	Valve guide	2	CFRPVDF	
4	Valve seat	2	CFRPVDF	
5	Valve gasket	2	PTFE	
6	Adapter	2	CFRPVDF	
7	O ring	2	FKM	P-32
8	O ring	2	FKM	P-20
9	Nut	2	CFRPVDF	
20	Hex bolt	8	STNLS STL	M8×60
21	Spring washer	8	STNLS STL	M8
29	Reinforcing plate	1	SS400	
30	Diaphragm	1	PTFE/EPDM	
31	Retainer plate	1	SUS304	
50	Nut*[1]	2	CFRPVDF	
51	Union*[1]	2	PVDF	
54	Flange*[1]	2	PPG	
55	Flange adapter*[1]	2	PVDF	

*[1]The parts asterisked (*) are supplied as the flange unit.

■ LK-F55, 57 TC

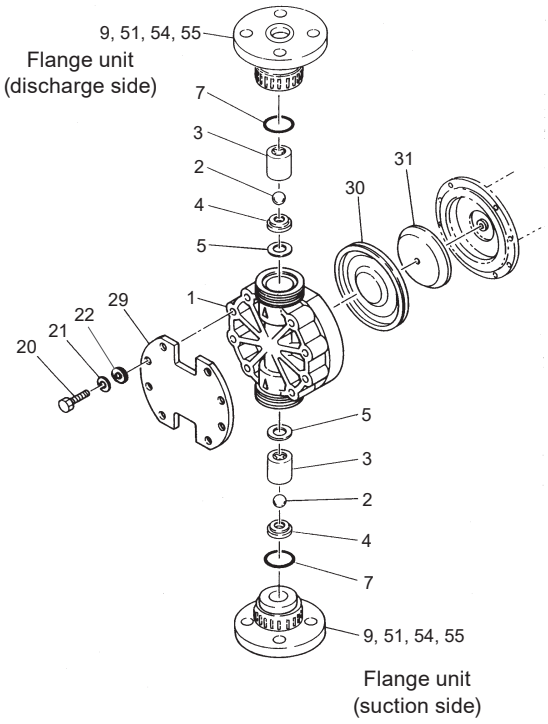

No.	Names	Q'ty	Materials	Remarks
1	Pump head	1	CFRPVDF	
2	Valve	2	Alumina ceramic	
3	Valve guide	2	CFRPVDF	
4	Valve seat	2	CFRPVDF	
5	Valve gasket	2	PTFE	
7	O ring	2	FKM	P-38
20	Hex head bolt	8	STNLS STL	M8×75
21	Spring washer	8	STNLS STL	M8
22	Plain washer	8	STNLS STL	M8
29	Reinforcing plate	1	FC200	
30	Diaphragm	1	PTFE/EPDM	
31	Retainer plate	1	SUS304	
9	Nut*[1]	2	CFRPVDF	
51	Union*[1]	2	PVDF	
54	Flange*[1]	2	PPG	
55	Flange adapter*[1]	2	PVDF	

*[1]The parts asterisked (*) are supplied as the flange unit.

■ LK-F11, 21, 22, 31, 32 S6

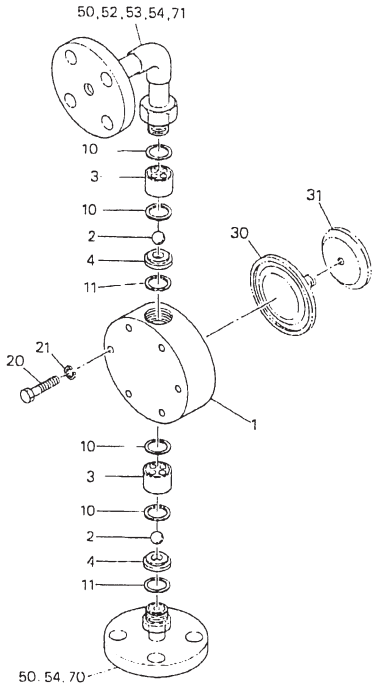

No.	Parts name	Q'ty	Material
1	Pump head	1	SUS316
2	Valve (ball check)	2	SUS316 EQUIVALENT
3	Valve guide	2	SUS316
4	Valve seat	2	SUS316
10	Valve gasket A	4	PTFE
11	Valve gasket B	2	PTFE

No.	Parts name	Q'ty	Material	Remarks		
				LK-F11	LK-F21, 22	LK-F31, 32
20	Hex. head bolt	–	STNLS STL	M4 × 40 4PCS	M5 × 35 4PCS	M5 × 45 6PCS
21	Spring washer	–	STNLS STL	M4 4PCS	M5 4PCS	M5 6PCS
30	Diaphragm	1	PTFE+EPDM			
31	Retainer plate	1	SUS304			
50	Nut*	2	SUS304			
52	Elbow*	1	SUS316			
53	Pipe*	1	SUS316			
54	Flange*	2	SUS316			
70	Suction port*	1	SUS316			
71	Discharge port*	1	SUS316			

Note: The parts asterisked (*) are supplied as the flange unit.

■ LK-F45, 47, 55, 57 S6

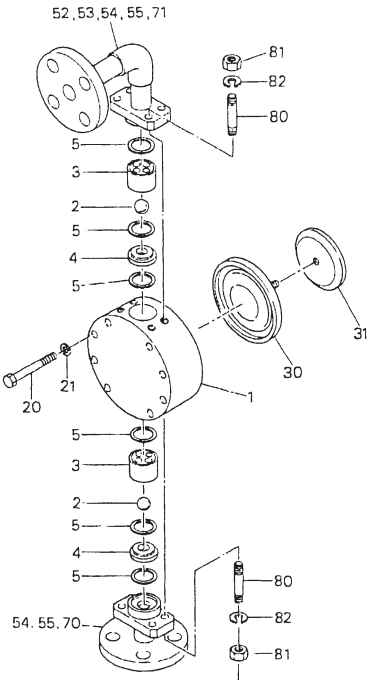

No.	Parts name	Q'ty	Material
1	Pump head	1	SUS316
2	Valve (ball check)	2	SUS316 EQUIVALENT
3	Valve guide	2	SUS316
4	Valve seat	2	SUS316
5	Valve gasket	6	PTFE

No.	Parts name	Q'ty	Material	Remarks	
				LK-F45, 47	LK-F55, 57
20	Hex. head bolt	8	STNLS STL	M8 × 65	M8 × 65
21	Spring washer	8	STNLS STL		
30	Diaphragm	1	PTFE+EPDM		
31	Retainer plate	1	SUS304		
52	Elbow*	1	SUS316		
53	Pipe*	1	SUS316		
54	Flange*	2	SUS316		
55	*Setting flange	2	SS400		
70	Suction port*	1	SUS316		
71	Discharge port*	1	SUS316		
80	Stud bolt	8	STNLS STL		
81	Hex. nut	8	STNLS STL		
82	Spring washer	8	STNLS STL		

Note: The parts asterisked (*) are supplied as the flange unit.

6. Description on Main Unit and Label

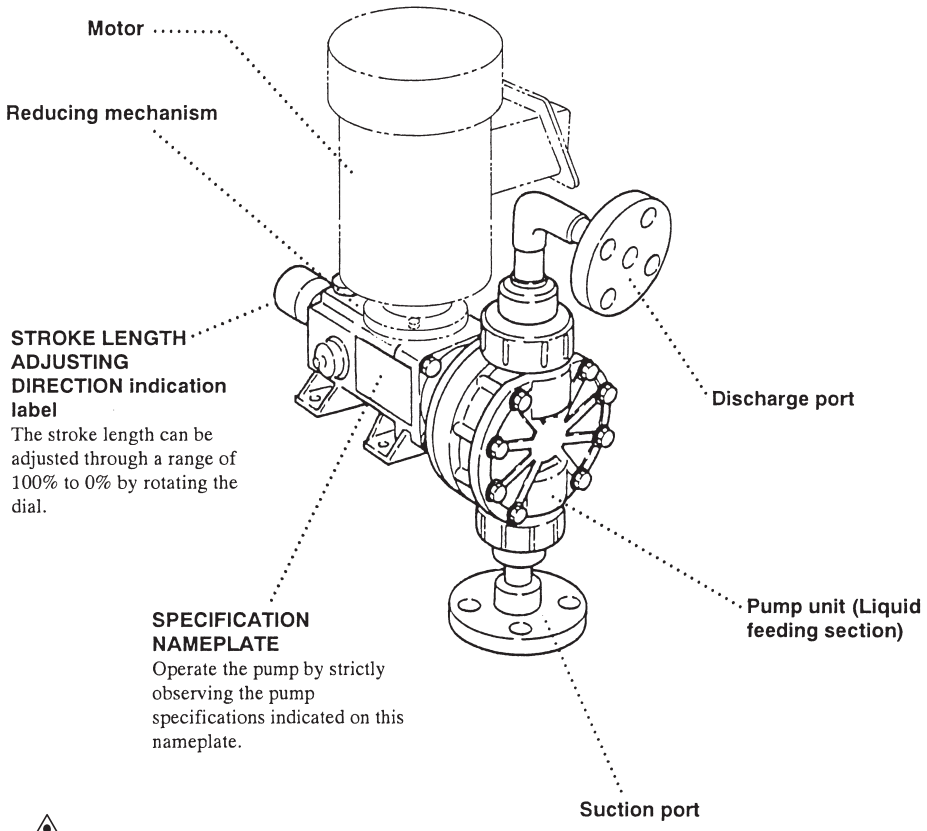

⚠ CAUTION

Do not use any solvent when wiping the nameplate, labels, or the pump main unit.

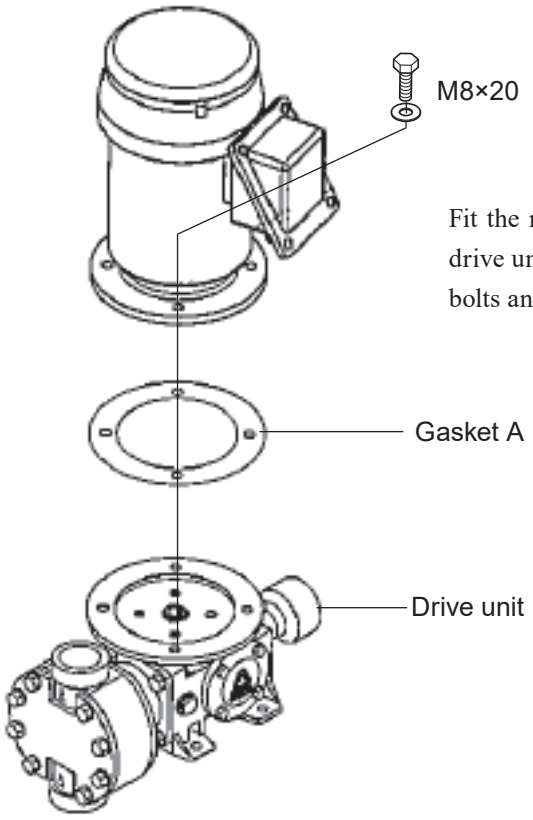

Fit the motor and gasket A to the drive unit by four M8×20 hexagon bolts and M8 washers.

7. Precautions for use

Always observe the following points.

1. Use care handling the pump. Do not drop. An impact may affect pump performance. Contact us or your nearest distributor if a pump has been damaged.
2. Be careful not to exceed the maximum flow rate and discharge pressure. A flow rate and discharge pressure change with piping length, piping I.D., piping layout. Use the pump only for liquid delivery.
3. Do not close the discharge/suction valves during operation, or the pump/piping system may be damaged by overpressure. Do not leave the valves opened after operation.
4. Keep the supply tank free from foreign matters. Foreign mattes may clog the pump/piping system, causing flow fluctuation or a poor flow.
5. Release a pressure from a discharge line before dismantling the pump or removing piping.
6. The metering pump by nature keeps working, exceeding the limit pressure of discharge line. This may damage the pump/piping system and burn out the motor. Install a relief valve close to the pump and fix its set pressure below the maximum allowable pressure of the pump/piping system.
7. Install an air chamber in order to reduce flow pulsation, piping vibration and overfeeding*1.
8. Install a back pressure valve in order to reduce the possibility of overfeeding.
9. Provide a strainer at the end of a suction line for the prevention of foreign matter interfusion (Clean the strainer periodically.). Otherwise, clogging may result.
10. Install a pressure gauge to monitor the discharge line pressure.
11. Be sure to turn off all the related power supplies prior to any inspection/maintenance and installation works (motor fan cover). Working on the pump with power ON, any rotating part may catch the hand, finger, hair, or clothes, and it may result in serious injury.

Glossary*1 A condition check valves in the pump head stay open and liquid continues flowing into discharge line. Overfeeding occurs when the discharge line pressure is much lower than the suction line pressure.

PUMP OPERATION

1. Handling Instructions 26

2. Installation 28

3. Piping 29

4. Wiring 31

5. Operation Step 31

1. Handling Instructions

(Observe all the following instructions to prevent injuries and accidents.)

⚠ Warning
● **Do not operate the pump for the circulation of hazardous mediums (such as explosive, combustible, flammable, or toxic substances, as well as corrosive or irritating substances considered harmful to human health).**
⚠ Caution
● **Read the following information prior to installing the pump.** ● **Protective wear:** When operating the pump or working near it, with the pump system loaded with chemical liquid, always wear protective clothing, face guard, goggles, and gloves. Further precautionary measures must be taken depending upon the type of liquid used. ● **Pump repair beyond the range specified in this instruction manual:** Do not try to disassemble or repair the pumps by yourself.

[1] Handle the pump carefully.

Strong impacts caused by dropping the pump on the floor or striking it may result in damage or faulty performance.

[2] Do not operate the pump in the following places.

- Places where the temperature falls below 0ºC
- Places where corrosive gas or explosive gas is generated
- Places exposed to splashing water
- Places where the ambient temperature is 40ºC or above
- Places where the humidity is excessively high (Permissible humidity: 35-85%RH)
- Places filled with or likely to be filled with explosive or corrosive atmosphere
- Danger due to dust, fire, earthquake and/or any externally imposed shock

[3] Keep the pump away from fire.

To prevent fire and explosions, do not place dangerous or inflammable substances near the pump.

[4] If pump is damaged

Do not operate a damaged pump, otherwise there may be electricity leakage or electric shocks.

[5] No remodeling

Never try to remodel the pump. This may cause a serious accident or damage.

[6] No disassembly or repair

Users are allowed to disassemble and repair the pump to the degree of the given description in "Disassembly and Assembly" in this manual.

⚠ Caution

Pump repair beyond the range specified in this instruction manual:

Do not try to disassemble or repair the pumps by yourself.

* The pump must be repaired by trained and qualified operators only. When it needs to be disassembled and repaired, stop operation and contact the supplier for advice.

[7] Do not close any discharge or suction valve while in operation.

Pump operation with any valve above closed increases the load onto the pump itself and will eventually damage the pump.

[8] Do not turn the stroke adjusting dial while the pump is not operating.

Rotating the stroke adjusting dial while not in operation applies load onto the dial and will eventually damage the pump.

[9] Allowable pressure limit

Set the discharge pressure at the allowable tolerable pressure limit level indicated in the "Specifications" paragraph or lower.

[10] Temperature humidity fluctuation

Temperature fluctuation may not change the performance of the pump itself. However, the liquid may change in terms of its viscosity, pressure, or corrosion resistance. Pay special attention to changes in liquid characteristics as a result of temperature fluctuation.

Liquid temperature range Material symbol VC, V6 : 0-50ºC Material symbol S6 : 0-80ºC
Ambient temperature range : 0-40ºC
Humidity range : 35-85%RH

2. Installation

■ Before installation

Always observe the following points. Observe information on the drawing and specification sheet. Allow sufficient space around the pump for easy access and maintenance.

⚠WARNING

- **Use care handling the pump.**
  Do not drop. An impact may affect pump performance. Keep the pump level when lifting it up.


Requirement

- **Ventilation**
  Fumes or vapours can be hazardous with certain solutions. Ensure proper ventilation at the operation site.


Caution

- **Qualified electrician only**
  Electrical work should be performed by a qualified electrician. Otherwise, personal injury or property damage could result.


Requirement

- **Keep the pump free from stress**
  Use measures to keep the pump connections free from stress. Weight and thermal expansion/contraction of the piping can stress connection points.


Prohibited

- **Do not lay the pump on its side**
  Lubricant oil may leak from the gear box and wet the motor.


Prohibited

• Install the pump in reference to drawings and specifications.
• Check pump model and performance on the drawings and specifications.
• Allow sufficient space around the pump for easy access and maintenance.

[1] Installation position

- Install the pump as close to the suction tank as possible and in the lowest position available (for flooded suction).

* The lift head depends upon the liquid properties, temperature, and length of the suction piping. For details of the setup, consult Iwaki or your dealer.

[2] Indoor and outdoor use

The pump can be operated either indoors or outdoors. However, safety measures should be taken so as not to expose the motor and power distribution unit to flooding or other natural hazards.

[3] Installation site

Select an installation site that is flat and free of vibrations caused by nearby machines. Space sufficient for maintenance work should be provided.

■ Lifting

Lift the pump horizontally so that the lubrication oil will not leak out of the pump drive unit.

[1] The area for anchoring the pump must be greater than the area of the base. If the anchoring area is not enough, the base may be destroyed due to a concentrated load on it.

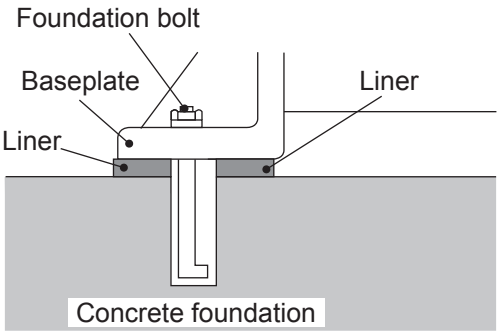

[2] If pump operation is to be subject to vibration (resonance with the piping, for example), provide an expansion joint between the pump and the piping. Otherwise, the piping, gauge, etc., may be damaged.

[3] Installation advice

- Use anchor bolts to fasten the pump base firmly.
- Install the pump horizontally.
- Sufficient space is required to allow cool air from the motor fan to circulate.
- Allow ample space around the pump for easy and efficient maintenance work.

3. Piping

Tightening torque for piping flange of pump. (In the case of flange with rubber gasket.)

Recommended bolt size and tightening torque for piping flange are as follows.

Model	Bolt size	Tightening torque
LK-F11, 21, 22, 31, 32, 45, 47, VC, V6, TC	M12	16N•m
LK-F55, 57, VC, V6, TC	M16	20N•m
LK-F11, 21, 22, 31, 32, 45, 47 S6	M12	16N•m
LK-F55, 57 S6	M16	20N•m

Load of piping for LK-F

When piping the pump, support the piping and use an expansion joint so as not to apply a load onto the pump discharge/suction piping.

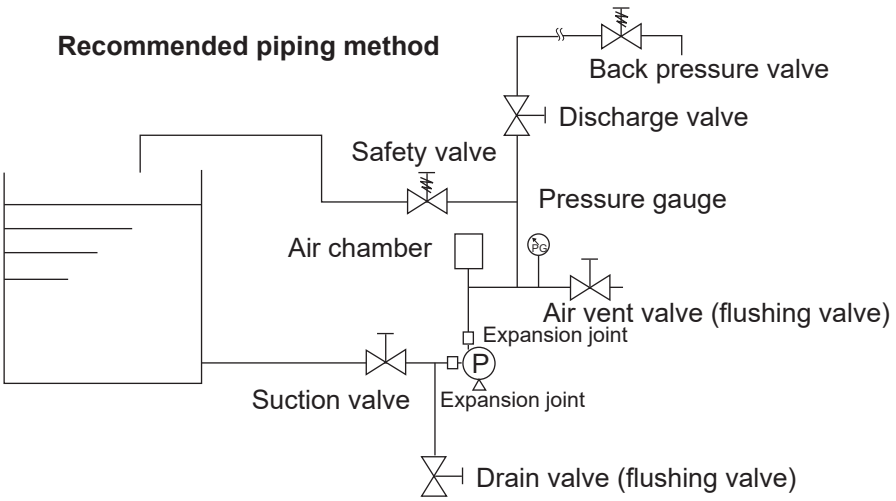

■ General precautions

(1) All piping should be supported independently so that unnecessary weight and vibration are not transmitted directly to the pump. Expansion joint is recommended to avoid damaging the pump head especially.
(2) The best piping arrangement for minimum loss is based on straight runs with as few bends and fittings as possible.
(3) When handling a high or low temperature liquid, provide an expansion joint in a pipe line to allow for stress caused by thermal expansion and contraction.
(4) When handling a slurry liquid, provide a drain plug at the bottom of piping and do not make a down loop in piping system.
(5) When handling a viscous, toxic or crystallizable liquid, provide piping for cleaning.
(6) Use reliable piping materials which can resist pressure and corrosion.
(7) Clean the inside of pipes before installation. Remove the caps fitted on the pump inlet and outlet before installing piping. The caps are provided for preventing contamination by foreign matter.
(8) A safety valve should be installed on the discharge line near the pump.
(9) Frozen liquid may damage the pump and piping. Drain liquid before leaving the pump/piping for a long time or use measures to prevent liquid from freezing in winter.

■ Suction piping

(1) Flooded suction is always recommended.
(2) The diameter of the suction pipe should never be smaller than the pump inlet.
(3) The suction piping should be as short as possible. Excessive length may lead to flow instability.
(4) Air leakage from the joints in the piping system may cause pumping failure or flow instability. Seal the joints firmly.

■ Discharge piping

(1) Install a safety valve near the pump. Its setting pressure should not exceed the pressure permissible for the pump and pipes.
(2) Firmly connect and seal the joints.
(3) Do not fail to install a pressure gauge on the discharge piping.
(4) Install a pulsation dampener (air chamber or accumulator) in the discharge piping to prevent any fluctuation of pressure. Install the pulsation dampener in a position close to the pump discharge port.

4. Wiring

Electrical connections

ATTENTION



The electrical connection should be carried out by an authorized electrician in accordance with local regulations. Please make sure that the electrical data on the nameplate of the motor correspond to the electricity supply on which it will be used. Motors must be connected to a motor protection switch.

[1] The pump and motor do not have protection equipment. Use an electromagnetic switch that conforms with the specifications (voltage, capacity, etc.) of the pump motor.

[2] If using the pump outdoors, waterproof the wiring to protect the switches from rainwater.

[3] Electromagnetic switches and push buttons should be installed reasonably distant from the pump.

5. Operation Step

■ Operation instructions

[1] Never operate the pump with the suction and discharge side valve closed. Otherwise, the inside of the pump will be damaged.

[2] In the event of a service power failure, turn off the power switch immediately and close the discharge valve.

[3] Maximum pump surface temperature
The max. pump surface temperature of each model is shown in the table. Arrange protective measures in accordance with the temperature levels.

Model	Liquid temp (°C)	Maximum surface temperature when ambient temperature is at 40°C (°C)
LK-F11, 21, 22, 31, 32, 45, 47, 55, 57, VC, V6, TC	50	45
LK-F11, 21, 22, 31, 32, 45, 47, 55, 57 S6	80	75

[4] Sound generated by pump
The level of sound generated by LK-F type of pump is 85 (dB). Arrange a muffling measures in accordance with the sound level if necessary. The procedure for sound measurement conforms to the EN 31201 (ISO11201).

■ Preparation for start-up

Preparations should be made, as described below, in the case of initial operation after installation and in the case of restarting of operation after a long period of inactivity.

[1] Thoroughly clean the inside of the tank and pipe. Then, supply liquid.
[2] Tighten the flange connecting bolts and the installation bolts on the base.
[3] Check every part of the pump for defects, loosened bolts, oil leakage, etc.
[4] Check the oil gauge to see if the drive unit is filled with the specified amount of oil.
[5] Remove the cap plug before operation.

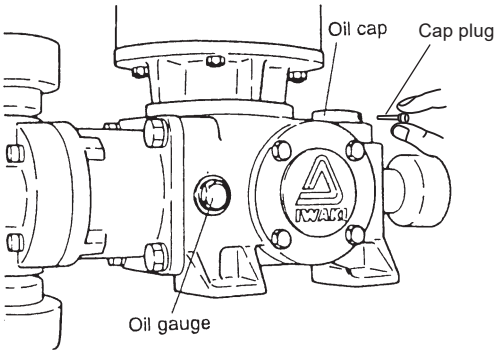

[5] Run the motor instantaneously to check for correct direction of motor rotation. The motor should run in the direction indicated with the arrow on the pump. If the direction is reversed, exchange any two wires of the three-phase power wires.

■ Operation

[1] Open the valves of the suction and discharge pipes.

⚠Caution
DO NOT OPERATE THE PUMP WITH THE VALVES CLOSED.
Do not close a discharge line during operation. Otherwise, liquid leakage or pump-head/motor/piping breakage may result due to overpressure.

[2] Turn on the power switch of the motor.
[3] Loosen the hex. socket head bolt of the stroke length dial. Set the stroke length at 0% by turning the stroke length dial.

⚠Caution
DO NOT TURN THE DIAL WHILE THE PUMP IS NOT OPERATING.

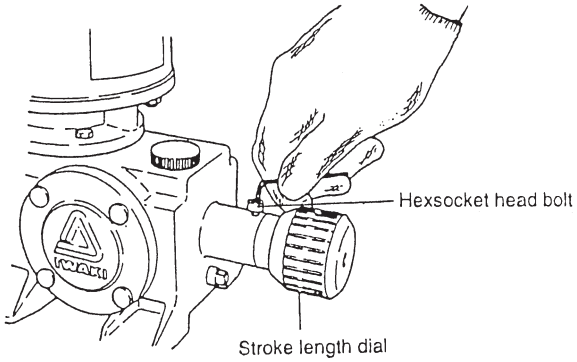

[4] Continue to run the pump for 30 minutes or longer to let it warm up. Check that no abnormality is found. This procedure is necessary only during at the first operation, but when the ambient temperature is extremely low, continue no-load running until the oil temperature rises sufficiently because the motor may sometimes be overloaded a little due to an increase in the viscosity of oil in the drive unit.

[5] Open an air vent valve to purge the discharge line for air.

[6] Increase the stroke length up to 100% and continue to run the pump for 30 minutes or longer again.

[7] Close the air vent valve gradually, watching the pressure gauge. The liquid will come into the discharge line and be discharged from the end of the pipe. Should the discharge pressure exceed the permissible pressure for the pump before the air vent valve is completely closed, check the piping system.

[8] Check that the motor amperage does not exceed the rated one and that no abnormality is found.

■ Metering

[1] Operate the pump using the liquid to be actually used.

[2] Setting the stroke length at 100%, determine the discharge capacity per minute several times. If no noticeable variation is found after repeated measuring, the pump is working normally.

[3] Measure the discharge capacity at two or three points of the stroke length. When a set point is changed, measure the discharge capacity after running one minute or longer.

[4] Make a pump calibration curve using the results of the above procedures.
[Note] Our in-plant test data, available on request, is based on pumping water at normal ambient temperature with a short piping system. Therefore, there will be a difference between the test data and the practical performance data.

[5] The relation between amount of stroke length dial revolution and stroke length is shown in the following graphs.

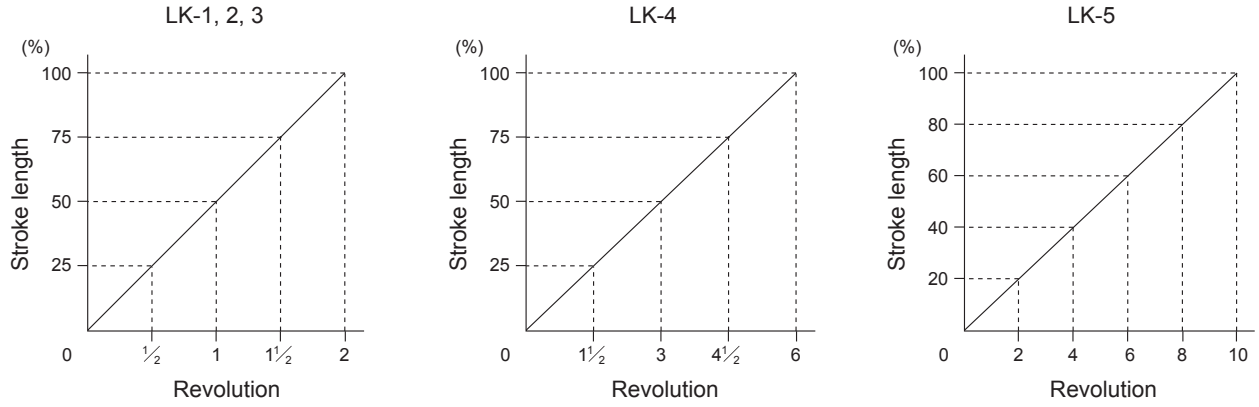

■ Before a long period of stoppage

1. Solution in the discharge line may be under pressure. Release the pressure from the discharge line before disconnecting plumbing or disassembly of the pump to avoid solution spray.
2. Flush the inside of the pump and pipework with clean water or cleaning liquid.
3. Frozen liquid may damage the pump and piping. Drain liquid before leaving the pump/piping for a long time or use measures to prevent liquid from freezing in winter.
4. Temporally use the band heater to keep the liquid in the pump and piping warm when suspending operation just for a short period of time.
5. Fully retract the diaphragm shaft before a long period of stoppage. Set the stroke length to 100% in operation and then stop the motor. Open the motor fan cover and rotate the motor fan by hand. The fan rotation may be heavy or light depending on rotation degree. Find a degree that gives the lightest rotation and stop rotating the fan. Check if lightest rotation is obtained through the whole stroke length, rotating the stroke length knob and finally set it to 0%. Run the pump with zero discharge-line pressure for about 5 minutes every 3 months in order to keep the motor bearing lubricated.

■ Resumption after stoppage

1. When operation is resumed after a short period of stoppage (within a week), the pump can start to run at any stroke length and discharge pressure. Do not forget to expel air before operation as necessary.
2. When operation is resumed after a long period of stoppage (a few weeks later), run the pump with 0% stroke length and zero discharge-line pressure, for a few minutes to lubricate the internal parts in the drive unit before full operation.
3. When operation is resumed after a long period of stoppage (a few months later), the flow rate may be too low to meet the specified discharge capacity due to diaphragm deformation. The diaphragm may recover its original shape after a few hours of running in.

■ Pulsation dampener

It is always recommended to install a pulsation dampener, i.e. diaphragm type accumulator, air chamber, etc. Because a metering pump is a reciprocating device, it produces pressure pulsations that the system sees in the forms of acceleration, inertia, shock, noise, and reduced service life. Especially when a piping is long, use a pulsation dampener for accurate metering. Air should be periodically supplied to the air chamber (having no membrane) because the air, compressed by the liquid, gradually dissolves in the liquid as time passes, resulting in insufficient air volume.

MAINTENANCE

1. Causes of Trouble and Troubleshooting 36

2. Maintenance and Inspection 38

3. Consumable Parts 39

4. Disassembly and Assembly 40

1. Causes of Trouble and Troubleshooting

Refer to this "1. Causes of Trouble and Troubleshooting". Consult supplier for more information.
If you find any troubles, turn off the power supply immediately.

Item	Problems	Ref. No. for cause/countermeasures
A	Discharge capacity is short.	1, 2, 4, 5, 6, 7, 8, 9, 11, 12
B	Discharge capacity is excessive.	3, 7, 9
C	Discharge capacity is unstable.	1, 2, 3, 4, 5, 7, 8, 11, 12
D	No liquid is discharged.	1, 2, 4, 7, 8, 11, 12
E	Discharge pressure does not rise.	1, 2, 4, 8, 10, 11, 12
F	Liquid is not being sucked.	1, 2, 4, 5, 6, 7, 8, 12
G	Liquid leaks.	5, 6, 20, 21
H	Motor does not run.	15, 16, 17, 18, 19
I	Excessive amperage is applied to motor.	13, 15, 16, 17, 19
J	Excessive vibration and loud noise.	8, 12, 13, 15, 19
K	Oil leaks.	14
L	Gear box is excessively heated.	7, 13, 19

Ref.	Cause	Countermeasures
1	Foreign matter is clogging valve ball, valve seat and/or valve guide.	Disassemble and clean.
2	Valve seat and/or valve ball is worn.	Replace.
3	Differential pressure is inadequate.	Install a back-pressure valve in discharge line. (0.3 bar is required as min. differential pressure.)
4	Air leaks into suction line.	Inspect suction pipes and connections. Re-tighten.
5	Defect of valve gasket or O-ring	Replace.
6	Damage to diaphragm	Replace. Check discharge pressure and foreign matter or crystallization in pump chamber if its life is too short.
7	Pumping condition (liquid, temperature, pressure, piping, etc.) is altered.	Renew pump performance data regarding altered pumping condition after confirming that pump is suitable.
8	Suction pipe or strainer is clogged.	Disassemble and clean.
9	Stroke length dial is shifted.	Readjust and tighten lock bolt securely after confirming that no liquid is discharged at stroke length of 0%.
10	Dust is clogging mouth of pressure gauge or pressure gauge is defective.	Clean or replace.
11	Leak from safety valve	Readjust pressure setting or replace if it is defective.

Ref.	Cause	Countermeasures
12	Cavitation occurs due to insufficient NPSH required.	Examine suction condition. Refer to foot note.
13	Lubricating oil of drive unit is not proper.	Check that specified oil is used. Check oil quantity and stain. Replenish or replace if necessary.
14	Defect of oil seal or O-ring	Replace.
15	Defect of motor	Replace.
16	Wrong wiring or defect of contact	Check wiring. Replace switch, etc. if necessary.
17	Voltage drop	Inspect cause and take countermeasures accordingly.
18	Fuse is burnt.	Inspect cause and take countermeasures accordingly.
19	Overload (excessive discharge pressure)	Check discharge line and take countermeasures for lowering pressure.
20	The nuts or setting flanges that are holding a suction and a discharge port are loose.	Tighten the nuts or setting flanges.
21	Pump head fixing bolts are loose.	Tighten the bolts.

Note: NPSHr of each model is as follows.

Pump Model	NPSHr (m)
LK-F 11	7.3
LK-F 21 LK-F 22	7.3
LK-F 31	7.3
LK-F 32	8.3
LK-F 45 LK-F 47	7.3
LK-F 55 LK-F 57	8.3

2. Maintenance and Inspection

■ Daily inspection

[1] Check whether the pump operates smoothly, without generating any abnormal noise or vibration.

[2] Check the level of the liquid in the suction tank.

[3] Check for no leakage.

[4] Check the drive unit for oil loss and leakage.

[5] Compare the discharge pressure and electric current measured during operation with the values indicated on the motor nameplate for the verification of normal pump load.

* Note that the values indicated on the pressure gauge vary in proportion to the specific gravity of the liquid. The cock of the pressure gauge must be opened only when measurement is carried out. It must be closed upon the completion of each measurement. If the cock remains open during pump operation, the meter mechanism may be affected by noise or vibration.

[6] If a spare pump is available, activate it from time to time to keep it ready for use any time.
Check to be sure there is no liquid leakage in the pump before operating it. If leakage is detected, never try to operate the pump.

[7] Check to be sure the discharge pressure, discharge flow rate, and motor power supply voltage do not fluctuate during pump operation. If considerable fluctuation of the respective values occurs, refer to "1. Causes of Trouble and Troubleshooting" for correct measures.

■ Periodic inspection

To ensure efficient and smooth operation of the pump, carry out periodic inspections by following the procedures described below. When inspection, overhauling, or repair work is necessary, stop the pump operation and contact the supplier.

The overhauling and repair work for Iwaki pumps must be performed by qualified personnel who have been trained and certified by the pump supplier. User's failure to observe this instruction exempts Iwaki from the responsibility for personal injury or damage to the equipment or facility which result from its misuse.

[1] Valve Unit

Check the valve balls, valve seats and valve guides every 6 months. If flaws or worn parts are found, replace them.

[2] Diaphragm

Check the diaphragm every 6 months if the usage is fairly light. The life of the diaphragm depends on the characteristics, pressure, temperature, etc. of the liquid being pumped. If any deformation or crack is found, the diaphragm should be replaced with a new one.

[3] Pump head seal materials

Tighten the pump head fixing bolts by the specified torque when detecting a leak. Replace seal materials as necessary.

[4] Oil

Replace the reduction gear oil at the following intervals to keep pump performance.

- Running-in period: after 500 hours
- Operation period: every 2000-3000 hours

Recommended oil is:

Oil company	Product name
Exxon Mobil Corporation	Mobilgear 600XP220

Remove the drain plug and drain the drive unit. Flush the inside with oil to clean it. Then, add new oil up to the 220mL of the oil gauge.

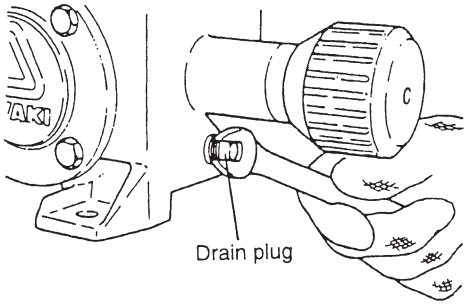

3. Consumable Parts

Consumable parts shown on table below must be replaced at the time of replacement shown as below.

Parts No.	Parts	Time to be replaced
2	Valve	12 months
3	Valve guide	
4	Valve seat	
5	Valve gasket	
7, 8, 12	O ring	
30	Diaphragm	4,000 hours

Note 1. Time to be replaced is based on pumping clear water at ambient temperature and it depends on characteristics, temperature and other conditions of pumped liquid.

2. O ring must be replaced every time when pump is disassembled regardless of the time to be replaced mentioned above.

3. Refer to pages 14 to 22 for parts no.

4. Disassembly and Assembly

Refer to exploded view of the model corresponding to your pump. The views are shown on "name of parts."

⚠Caution

- Before disassembling/assembling the pump, do not fail to turn off the main power supply. Display a board "WORKING" near the power switch to let other personnel know the situation. Power ON initiated by any other person than the operator/service man may result in an accident. The operator has the responsibility to take special precautions to prevent this.
- Prior to disassembly or assembly, close the suction valve and discharge valve fully.
- The piping and the pump often retain liquid. When a dangerous liquid is handled, wear protectors (goggles, rubber gloves, etc.) when disconnecting the pipes.
- Solution in the discharge line may be under pressure. Release the pressure from the discharge line before disconnecting plumbing or disassembly of the pump to avoid solution spray.

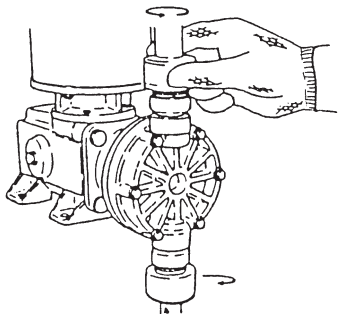

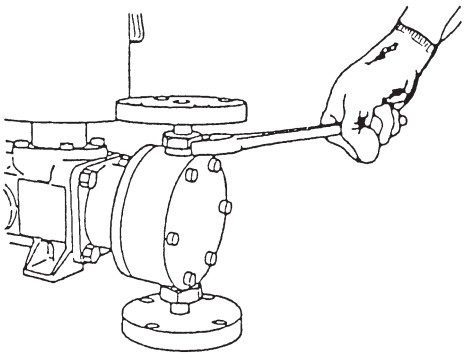

■ Disassembly

[1] Disassemble only after thoroughly washing out the liquid inside the pump by use of flushing piping, clean the inside of the pump.

⚠Warning

Always wear protective clothing such as an eye protection, chemical resistant gloves, a mask and a face shield during disassembly, assembly or maintenance work. The specific solution will dictate the degree of protection. Refer to SDS precautions from the solution supplier.

[2] Remove the discharge and suction piping.

⚠Caution

Close the suction valve and discharge valve fully.

1. Valve
   (1) Remove the suction and discharge flange unit by loosening the nut (50).
   Remove the adapter (6) if any, and take out the valve (2), valve guide (3), valve seat (4), valve gasket (5) and O-ring (7). If the pump head is made of stainless steel, the valve assembly can be taken out by loosening the setting flange (54) or the nuts (81).
   (2) Check the valve and valve seat, and if a flaw or wear is found, replace it with a new one. It is recommended to replace the gasket and O-ring every time.

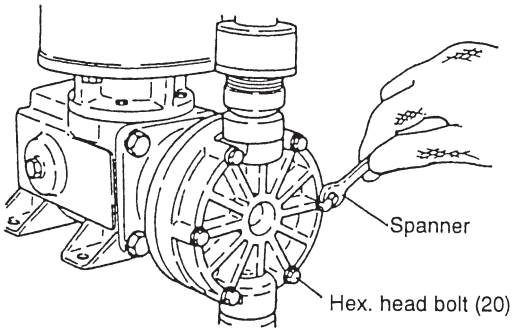

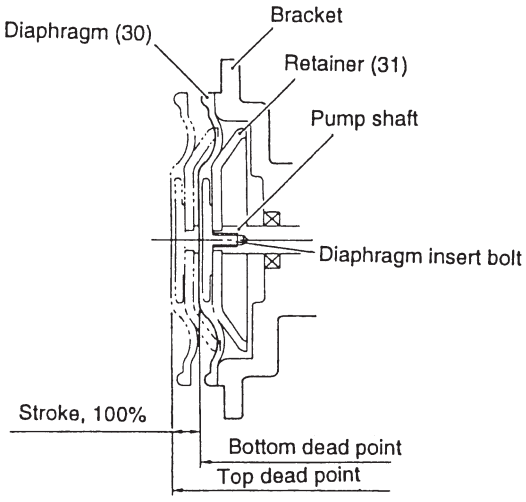

2. Diaphragm

(1) Loosen the hex. head bolts (20). Loosen the hex. socket bolts (20), if any.

(2) Remove the pump head (1).

(3) Connect power supply and run the motor temporarily.
Set stroke length to 100%. Turn off when the diaphragm comes to the top dead point.
Disconnect power supply.

⚠Caution

Do not touch any moving parts during operation.

(4) Remove the diaphragm from the pump shaft by turning the diaphragm counterclockwise with hand. If any worn or deformed part is found, replace it with a new one.

(5) Fix the new diaphragm firmly to the pump shaft by turning it clockwise with hand. Confirm that the retainer (31) is firmly seated in a depression of the diaphragm insert bolt and touches the end of the pump shaft. Should the position of the pump shaft be changed after reassembling the diaphragm, set it at the top dead point, following the above procedure (3).

■ Assembly

The pump should be assembled by carrying out the steps of disassembly in reverse. Pay attention to the following points.

1. Valve

(1) Replacement of O ring and gasket
When replacing the O ring or gasket, be sure to install a new one. In addition, see that the O ring or gasket is not twisted or pressed by another part.

* The sealing section should be cleaned free of dust or scratches before installation.

(2) Assemble the valve assembly by reversing the procedure, taking special care with the direction and position of the valve guide, valve seat and valve gasket.

⚠Caution

If the direction or position is mistaken in assembling the valve guide, valve ball, or valve seat, the pump may be damaged.

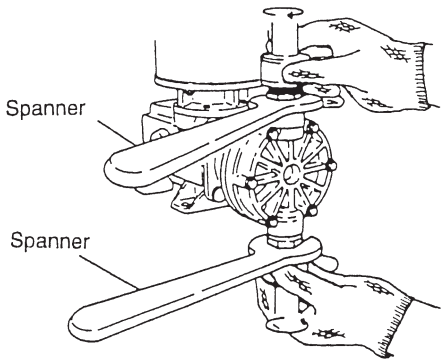

(3) When installing a LK-F 11, 21, 22, 31, or 32 flange (VC, V6, or TC type), use a spanner to fix the adapter (6) then fasten the nut (50) by hand.

2. Diaphragm

(1) Connect power supply and run the motor temporarily, and move the diaphragm to the bottom dead point where the diaphragm is fully drawn back.
Turn off motor.

⚠Caution
Do not touch any moving parts during operation.

(2) Fit the pump head (1) to the bracket of the drive unit with the hex. head bolts (20), if any.
Tighten all the bolts securely and uniformly.

	Tighening torque for bolts (20)				**unit : Nm**
	LK-F 11	LK-F 21, 22	LK-F 31, 32	LK-F 45, 47	LK-F 55, 57
VC, V6, TC	2.2	2.9	2.9	11.8	11.8
S6	2.2	2.9	4.9	11.8	11.8

EC DECLARATION OF CONFORMITY

A copy of the original Declaration of Conformity

(SUPPLIER'S NAME)

WE

IWAKI CO.,LTD.

(ADDRESS)

6-6 2-CHOME KANDA-SUDACHO CHIYODA-KU TOKYO JAPAN

(PRODUCT)

DECLARE UNDER OUR SOLE RESPONSIBILITY THAT THE PRODUCTS

METERING PUMP

(MODEL NAME)

LK SERIES

TO WHICH THIS DECLARATION RELATES ARE IN CONFORMITY WITH THE FOLLOWING STANDARDS OR DIRECTIVES AS FAR AS APPLICABLE

(DIRECTIVES)

MACHINERY DIRECTIVE 2006/42/EC (ANNEX IIA)
RoHS DIRECTIVE 2011/65/EU

(STANDARDS)

EN ISO12100: 2010 EN809: 1998 + A1: 2009 EN IEC63000:2018

(A PERSON WHO IS AUTHORISED TO COMPILE THE TECHNICAL FILE IN THE COMMUNITY)

IWAKI EUROPE GMBH
SIEMENSRING 115 D-47877 WILLICH GERMANY

NOTE: THIS DECLARATION BECOMES INVALID IF TECHNICAL OR OPERATIONAL MODIFICATIONS ARE INTRODUCED WITHOUT THE MANUFACTURER'S CONSENT.

T. Sawada.

TSUTOMU SAWADA
DEPUTY SENIOR GENERAL MANAGER,
QUALITY ASSURANCE HEAD OFFICE

Tokyo, Sep. 13, 2021

(PLACE AND DATE OF ISSUE) **(NAME AND SIGNATURE OR EQUIVALENT MARKING OF AUTHORIZED PERSON)**

DOCUMENT NO. IS-51K-566-2

CE conformity

■ **Information on CE conformity of pump units when the motor is fitted by the customer (dealer/operator)**

We hereby confirm the CE conformity of our pump unit provided that the following criteria about intended use are satisfied as described in this instruction manual:

- Motor conformity in accordance with any relevant EC directives which are currently effective.
- The dimensions of a required motor flange and shaft must fit the specified pump.
- The motor must be installed to the pump according to this instruction manual.
- Guaranteed grounding
- The pump must not be repainted over our original upper coating.

Any reseller or dealer who connects the pump with a motor and markets it as a complete unit must conform to all relevant EC directives. In such cases, the reseller or dealer then becomes the manufacturer.

Waste Electrical and Electronic Equipment (WEEE)

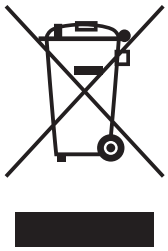

In accordance with the European Directive 2012/19/EU on waste electrical and electronic equipment, this product features the crossed-out wheelie bin symbol. When this product is disposed of in household wastes, toxic components included in it can cause major environmental and human health problems. Use appropriate waste collection systems for recovery and recycling. Contact your local distributor or nearest Iwaki company for the detailed collection systems.

https://www.iwakipumps.jp
IWAKI CO.,LTD. 6-6 Kanda-Sudacho 2-chome Chiyoda-ku Tokyo 101-8558 Japan
TEL: +81 3 3254 2935 FAX: +81 3 3252 8892

European Headquarter / IWAKI Europe GmbH
TEL: +49 2154 9254 0 FAX: +49 2154 9254 48
Germany / IWAKI Europe GmbH
TEL: +49 2154 9254 50 FAX: +49 2154 9254 55
The Netherlands / IWAKI Europe GmbH (Netherlands Branch)
TEL: +31 74 2420011 FAX: +49 2154 9254 48
Italy / IWAKI Europe GmbH (Italy Branch)
TEL: +39 0445 561219 FAX: +39 0445 569088
Spain / IWAKI Europe GmbH (Spain Branch)
TEL/FAX: +34 934 741 638
Poland / IWAKI Europe GmbH (East Europe Branch)
TEL: +48 12 347 0755 FAX: +48 12 347 0900
Denmark / IWAKI Nordic A/S
TEL: +45 48 242345
Finland / IWAKI Suomi Oy
TEL: +358 10 201 0490
Norway / IWAKI Norge AS
TEL: +47 23 38 49 00
Sweden / IWAKI Sverige AB
TEL: +46 8 511 72900
Belgium / IWAKI Belgium N.V.
TEL: +32 13 670200 FAX: +32 13 672030
France / IWAKI France S.A.
TEL: +33 1 69 63 33 70 FAX: +33 1 64 49 92 73
U.S.A. / IWAKI America Inc.
TEL: +1 508 429 1440 FAX: +1 508 429 1386
Brazil / IWAKI Do Brasil Comercio De Bombas Hidraulicas LTDA.
TEL/FAX: +55 19 3244 5900
China (Shanghai) / IWAKI Pumps (Shanghai) Co., Ltd.
TEL: +86 21 6272 7502 FAX: +86 21 6272 6929
China (Hong Kong) / IWAKI Pumps Co., Ltd.
TEL: +852 2607 1168 FAX: +852 2607 1000
China (Guangzhou) / GFTZ IWAKI Engineering & Trading Co., Ltd.
TEL: +86 20 84350603 FAX: +86 20 84359181
China (Shenzhen) / IWAKI Pumps (Shenzhen) Co., Ltd.
TEL: +86 0755 8656 3696
Singapore / IWAKI Singapore Pte Ltd.
TEL: +65 6316 2028 FAX: +65 6316 3221
Indonesia / IWAKI Singapore Pte Ltd. (Indonesia Office)
TEL: +62 21 6906606 FAX: +62 21 6906612
Malaysia / IWAKIm SDN. BHD.
TEL: +60 3 7803 8807 FAX: +60 3 7803 4800
Korea / IWAKI Korea Co., Ltd.
TEL: +82 2 6238 4800 FAX: +82 2 6238 4801
Taiwan / IWAKI Pumps Taiwan Co., Ltd.
TEL: +886 2 8227 6900 FAX: +886 2 8227 6818
Thailand / IWAKI (Thailand) Co., Ltd.
TEL: +66 2 322 2471 FAX: +66 2 322 2477
Australia / IWAKI Pumps Australia Pty Ltd.
TEL: +61 2 9899 2411 FAX: +61 2 9899 2421

T1045-6 '26/09