Iwaki Linear Pump
LR-TR (Europe)

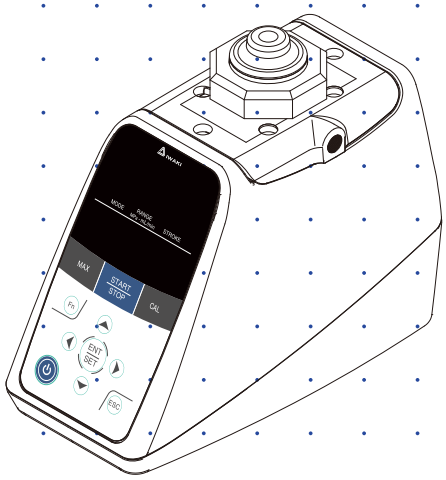

Instruction manual

Thank you for choosing our product.

⚠ Please read through this instruction manual before use.

This instruction manual describes important precautions and instructions for the product. Always keep it on hand for quick reference.

©2026 IWAKI CO., LTD.

Order confirmation

Open the package and check that the product conforms to your order. If any problem or inconsistency is found, immediately contact your distributor.

a. Check if the delivery is correct

Check the nameplate to see if the model code is as ordered.

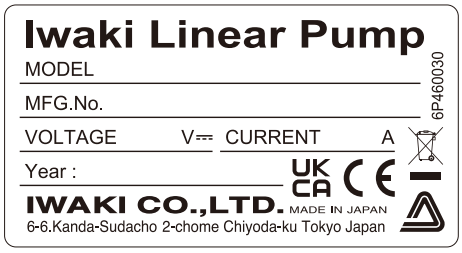

*The CE/UKCA markings on our product(s) are for us to market the product(s) into the European Union market / the Great Britain (England, Wales and Scotland) market, however, the CE/UKCA markings do not ensure any safety or conformity of the product(s) outside the EU/GB markets. When the pump is incorporated into the equipment marketed in the EU/GB markets, such equipment must meet all the requirements of applicable directives/regulations. In such a case, any person who places the equipment on the markets must carry CE/UKCA marks on the equipment as a manufacturer.

b. Check accessories are complete

<*AC* adapter>

- AC adapter (certified by UL as an NRTL for US and Canada)

  Manufacturer: Delta Electronics, Inc.
  Model: ADT-060A24AB
  Rated input voltage: 100-240 VAC ±10%
  Rated output voltage: 24 VDC
  Rated current: 2.5 A

*See the manufacturer's website to read through the instruction manual of the AC adapter before use.

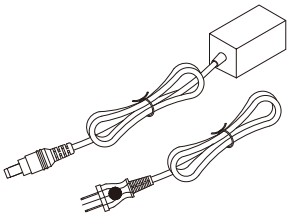

<*Other accessories*>

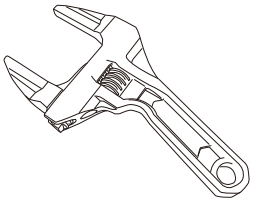

Adjustable wrench

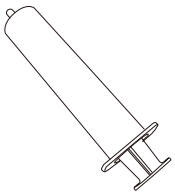

Syringe with a 4 mm O.D. inlet

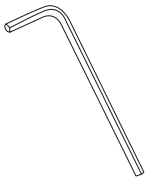

2.5 mm hex wrench

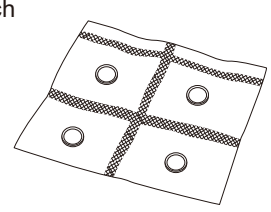

Four module gaskets

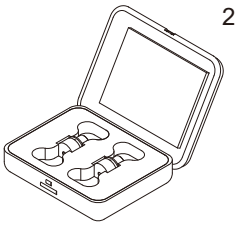

Valve module (option)
*Provided in the case

c. Check if the delivery is damaged or deformed

Check for transit damage and loose bolts.

Contents

Order confirmation **2**

Safety instructions ***7***

WARNING **8**

CAUTION **9**

Precautions for use **11**

Overview ***12***

Introduction **12**

Pump structure & Operating principle 12

Features 12

Operational functions **13**

MODE 13

■ MANUAL (see page 39) 13

■ BATCH (with the external dry signal or ENT key, see page 40) 13

RANGE 13

STROKE 14

■ SIN (Sine) 14

■ PLS (Pulse) 14

■ CONT (Continuous) 14

Other functions 14

■ MAX speed (of each range) 14

■ Priming speed (see page 29) 15

■ STOP function (see page 41) 15

■ Tuning (see page 62) 15

■ Initialization (see page 62) 15

■ Error messages and error signal (see page 61) 15

Remote communication (COM mode) 15

Part names **16**

Pump 16

Operational panel 16

Control display 17

■ Basic displays & Pump states 17

Identification codes **19**

Pump 19

Installation ***20***

Pump mounting **20**
Plumbing **21**
System overview 21
■ Discharge & Suction valves 21
■ Air vent line 21
■ Back pressure valve 21
■ Relief valve 21
■ Pressure gauge 21
Pump inlet/outlet connections 22
■ Tube connection 22
Wiring **23**
Wire connection with external devices 23
■ Signal input/output 23
■ Modbus communication 24
End terminals 25
Wiring diagram 26
■ Signal input/output 26
■ Modbus communication 26
Pin assignment 27
Operation 28
Before operation **28**
Points to be checked 28
Retightening of pump head fixing bolts 28
Retightening of the union nut 28
Priming 29
■ Pump with RS valve module 29
■ Pump with SS valve module 31
Commissioning 32
Output mode setting 33
Perform a calibration **34**
Push to Calibrate 34
Count then Calibrate 36
Check the max output capacity 38
Operation using keypads or external signals **39**
Manual operation 39
Batch operation 40
STOP function 41
Before the pump is stopped 41

Operation using Modbus communication **42**
Modbus operation 42
■ Operational functions in the COM mode 42
■ Communication standard 43
Modbus specification 43
■ Communication protocol 43
Input Registers (Read only) 44
■ Measured and monitored parameters 44
■ Logs 45
Holding Register (Read/Write) 48
Operation mode 52
■ Select the STD mode 52
■ Select the COM mode 52
■ Turn off the pump in COM mode 52
■ Troubleshooting (communication failure) 53
COM mode setting 53
Operation programming **54**
Setting overview 54
Basic menus 55
Function menus 56
■ Standard mode 56
■ Communication mode 58

Maintenance 59

Troubleshooting **59**
■ Pump 59
Error messages **61**
Tuning **62**
Initialization **62**
Inspection **63**
Daily inspection 63
Wear part replacement **64**
Wear part list 64
Before replacement 65
■ Flushing 65
Wear parts 66
■ Disassembly 66
■ Cleaning valve module 68
■ Cleaning pump head 69

■ Assembly 70
Exploded view 73
Pump 73
Specifications/Outer dimensions 74
Specifications 74
■ Pump 74
■ CV (Coefficient of Variation) value at 25°C 74
■ Control 75
■ Input/Output 76
■ Display 76
■ Keypads 77
Outer dimension 77
Appendix 78
MODBUS 78
Communication protocol 78
Communication frame 78
How to generate CRC-16 79
Exception response 79
Communication frame for four function codes 79
■ Function code 0x04: Input register (R) 80
■ Function code 0x03: Holding register (R) 80
■ Function code 0x06: Holding register (W) 81
■ Function code 0x10: Holding registers (W) 81
Communication sequence 82
Modbus basic sequence 82
■ Sequence description 82
Basic setup example (MAN mode) 83
MAN start/stop setup example (for the slave address of 21) 84
Flow rate adjustment setup example (MAN mode) 85
BATCH start and completion example 86
BATCH abort example 87
CAL setup example 88
Count then Calibrate example 89
Tuning example 90
Pump identification (with Extra data saving_0) 91
Power off pump 92
EC DECLARATION OF CONFORMITY 93
UK DECLARATION OF CONFORMITY 94

Safety instructions

Read through this section before use. This section describes important information for you to prevent personal injury or property damage.

■ Symbols

In this instruction manual, the degree of risk caused by incorrect use is noted with the following symbols. Please pay attention to the information associated with the symbols.

⚠ **WARNING**	**Indicates mishandling could lead to a fatal or serious accident.**
⚠ **CAUTION**	**Indicates mishandling could lead to personal injury or property damage.**

A symbol accompanies each precaution, suggesting the use of "Caution", "Prohibited actions" or specific "Requirements".



⚠Export Restrictions

Technical information contained in this instruction manual might be treated as controlled technology in your countries, due to agreements in international regime for export control.
Please be reminded that export license/permission could be required when this manual is provided, due to export control regulations of your country.

⚠WARNING



Turn off power before service

Risk of electrical shock. Be sure to turn off power to stop the pump and related devices before service is performed.



Stop operation

If you notice any abnormal or dangerous conditions, suspend operation immediately and inspect/solve problems.



Do not use the pump in any condition other than its intended purpose

The use of the pump in any conditions other than those clearly specified may result in failure or injury. Use this product in specified conditions only. Using this product outside the scope defined in the instruction manual may compromise its protective capabilities.



Do not modify the pump

Alterations to the pump carry a high degree of risk. It is not the manufacturer's responsibility for any failure or injury resulting from alterations to the pump.



Wear protective clothing

Always wear protective clothing such as an eye protection, chemical resistant gloves, a mask and a face shield during disassembly, assembly or maintenance work. The specific solution will dictate the degree of protection. Refer to SDS precautions from the solution supplier.



Do not damage a power cable

Do not pull, knot, or crush the power cable. Damage to the power cable could lead to a fire or electrical shock if cut or broken.



Do not operate the pump in a flammable atmosphere

Do not place explosive or flammable material near the pump.



Daily inspection and measurement

Measurement, daily inspection, and maintenance are required to ensure this pump can safely handle hazardous liquids in your system.

⚠CAUTION


Requirement

Qualified personnel only

The pump should be handled or operated by qualified personnel with a full understanding of the pump. Any person not familiar with the product should not take part in the operation or maintenance of the pump.


Requirement

Use only the provided AC adapter and power cable

Use of any other adapter or cable could lead to failure or fire.


Prohibited

Keep electric parts and wiring dry

Risk of fire or electric shock. Install the pump and the AC adapter where they can be kept dry.


Caution

Ventilation

Fumes or vapours can be hazardous with certain solutions. Ensure proper ventilation at the operation site.


Prohibited

Do not install/store the pump:

- In a flammable/corrosive atmosphere.
- In a dusty/humid environment.
- Where ambient temperature can exceed 0-40°C.
- In direct sunlight or wind & rain.


Requirement

Spill precautions

Ensure protection and containment of solution in the event of plumbing or pump damage (secondary containment).


Prohibited

Do not use the pump in a wet location

The pump is not waterproof. Use of the pump in wet or extremely humid locations could lead to electric shock or short circuit.


Prohibited

Preventative maintenance

Follow instructions in this manual for replacement of wear parts. Do not disassemble the pump beyond the extent of the instructions. Observe the service lives of the wear parts; otherwise, performance degradation or the parts damage may result.


Prohibited

Do not use a damaged pump

Use of a damaged pump could lead to an electric shock or death.


Requirement

Disposal of a used pump

Dispose of any used or damaged pump in accordance with local rules and regulations. If necessary, consult a licensed industrial waste disposal company.


Caution

Check pump head bolts

Liquid may leak if any of the M3 pump head bolts become loose. Remove rubber bushes and use the 2.5 mm hex wrench to tighten the bolts diagonally and evenly by 0.7 N•m before initial operation and at regular intervals.


Caution

Retighten the union nut:

- After the pump head is taken apart for cleaning and then put together.
- Before the pump starts to run.
- When the room temperature or liquid temperature drops 5°C or more from the beginning of operation.

A loose union nut, that is, loose valve modules could lead to a chemical leak and performance degradation. Tighten the union nut by hand and then use the supplied adjustable wrench to turn it further (for about 30°).


Caution

Do not leave the pump "paused" under pressure

While the pump is temporarily stopped by the START/STOP key or an external switch or solid-state device, the pump is actually "driven" to keep the diaphragm position under pressure. The built-in circuit protector will turn off the pump automatically with an error display if overcurrent/overheat is detected in this condition.


Prohibited

Do not close suction and discharge lines during operation

Solution may leak or pump and piping may break. Install a relief valve to ensure safety and prevent damaged plumbing.


Caution

Do not use excessive force when tightening fittings to the PEEK pump head

Overtightening may damage components around the pump inlet and outlet. Wrap the R⅛" male fittings with sealing tape—two full turns—prior to installation.

- Recommended sealing tape:
  VALQUA Tape Seal (0.1 mm thickness, 8 mm width)

Tighten the fittings to the inlet/outlet ports to a torque of 1.3 N·m. If a torque wrench is not available, use an adjustable spanner to tighten the fittings approximately four full turns after initial contact.


Caution

EMC Class A Product

This product is classified as Class A equipment under the EMC Directive. It may cause radio interference in residential environments. Take appropriate measures if necessary.

Precautions for use

- Select a level location, free from vibration, that won't hold liquid. If the pump is not installed level, output may be affected.



- The suction line I.D. should be 2 mm or wider.



- The built-in circuit protector will stop the pump if it sees overcurrent that is over-pressure to the linear actuator; however, this is an extra protection. Purchase separately and use an external relief valve on the discharge line of the pump.



- Use care handling the pump. Do not drop. An impact may affect pump performance. Do not use a pump that has been damaged to avoid the risk of electrical damage or shock.



- Do not operate the pump while wet with solution or water. Failure or injury may result. Immediately dry off the pump if it gets wet.



- Solution in the discharge line may be under pressure. Release the pressure from the discharge line before disconnecting plumbing or disassembly of the pump to avoid solution spray.



- Wear protective clothing when handling or working with pumps. Consult solution SDS for appropriate precautions. Do not come into contact with residual solution.



- Do not send a liquid with slurry particles, deposits, or debris, as premature wear of the valve module and diaphragm will result in pump failure or performance degradation. The LR pump with the ruby valve ball and the sapphire seat, especially, is more easily subjected than the stainless counterparts.



- After receiving a response from the pump in the Modbus COM mode, a controlling device should make at least 50 ms interval to send a next request to the pump.



- In accordance with the European Directive 2012/19/EU on waste electrical and electronic equipment (WEEE), this product features the crossed-out wheelie bin symbol. When this product is disposed of in household wastes, toxic components included in it can cause major environmental and human health problems. Use appropriate waste collection systems for recovery and recycling. Contact your local distributor or nearest Iwaki company for the detailed collection systems.



Overview

Pump characteristics, features and part names are described in this section.

Introduction

Pump structure & Operating principle

The LR series Linear Pump is a diaphragm metering pump with an advanced control engineering. Linear actuators control the reciprocating motion of diaphragms individually, achieving a less liquid pulsation and operation noise than ever.

Principle of operation

The reciprocating motion of two linear actuators and diaphragms, and volumetric change in the diaphragm chambers let in liquid and then let out with the assistance of the valve modules.

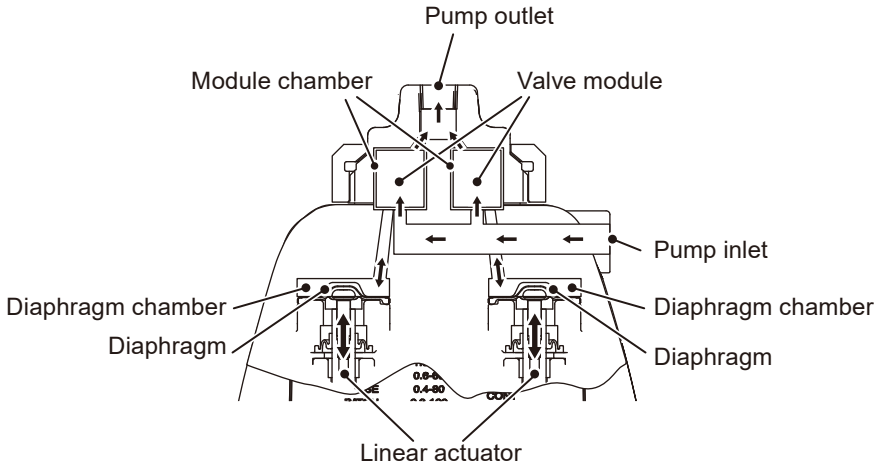

Features

● 10000:1 Turndown Ratio

The linear actuator that is highly efficient design and the four level flow ranges assure a full and accurate turndown ratio up to 10000:1 where output capacity can be precisely adjusted from 100 mL/min (3.38 fl-oz/min) down to 0.01 mL/min (0.000338 fl-oz/min).

● High Accuracy

The pump with SS valve module code, that stands for stainless valve ball and stainless valve seat, achieves the best repeatability of ±0.5 % (at 50 % or higher pump capacity of each range option: 1.0MPa-30mL/min, 0.6MPa-60mL/min, 0.4MPa-80mL/min, or 0.3MPa-100mL/min range).

Also, the pump with RS code, ruby valve ball and sapphire valve seat, achieves the best lowest flow range (0.01 mL/min to 0.1 mL/min range where the SS type can not reach) with the high repeatability of ±3.0 %.

*See page 74, for graphs also.

● Silent Design

Much less mechanical noise than our legacy solenoid pumps (40 dBA (1 m, A scale) with SIN/CONT strokes, 45 dBA (1 m, A scale) with PLS stroke). Suitable for very quiet environments.

● LED Status Indicator

The LED status indicator on the display tells users whether the pump is running, paused, or alarming.

Operational functions

This pump has three main setting categories of "MODE" where users select the Manual or Batch mode, "RANGE" the pressure/flow range, and "STROKE" the pulse wave from the pump output.

MODE

Select the Manual operation or the Batch operation.

■ MANUAL (see page 39)

Use the START/STOP key to run/stop the pump corresponding to the RANGE setting, the STROKE setting, and the desired output (mL/min). The output can be changed during operation or stop.

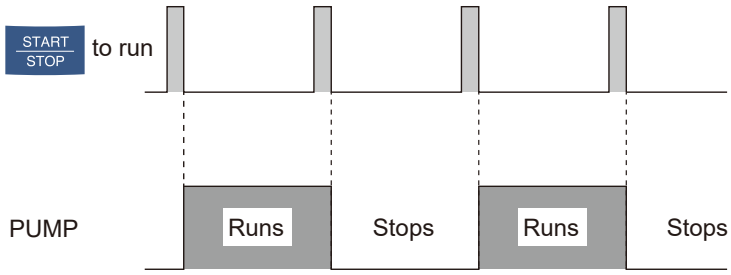

■ BATCH (with the external dry signal or ENT key, see page 40)

Use the ENT/SET key or a dry contact pulse signal (from a switch or solid-state device capable of switching 12 VDC at 10 mA) to run the pump corresponding to the user entry speed (mL/min), the MPa - mL/min range (RANGE) and the pulse wave (STROKE).

In the batch mode, the pump stops once the user entry volume (mL) is met. This is the end of a batch cycle. The next cycle will start with another push of the ENT key or another entry of pulse signal.

*Push of the ENT key or entry of the pulse signal will be cancelled while the pump is running for the earlier signal.

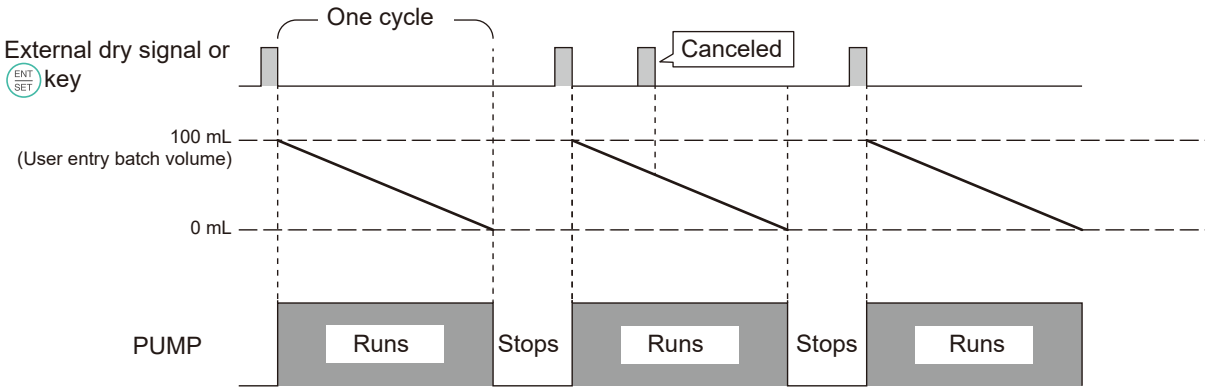

RANGE

Select the best suitable pressure range (MPa) and flow range (mL/min) for your application.

Range options	Pressure	Output capacity
	MPa	mL/min
1.0MPa - 30mL/min	0 - 1.0	0.01-30.00
0.6MPa - 60mL/min	0 - 0.6	0.01-60.00
0.4MPa - 80mL/min	0 - 0.4	0.01-80.00
0.3MPa - 100mL/min	0 - 0.3	0.01-100.00

*Observe the rated pressure range at each range option.

STROKE

Select the optimal pulse wave from the linear actuators for your application.

■ SIN (Sine)

The two actuators of this pump reciprocate in turn to reduce pulsation and operation noise (40 dB).

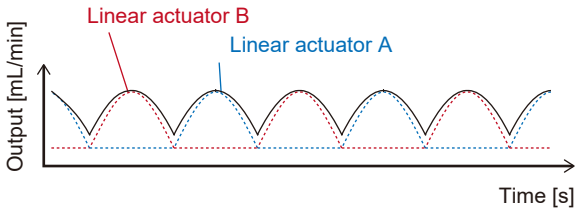

■ PLS (Pulse)

The two actuators of this pump reciprocate simultaneously to reproduce our legacy solenoid pump pulsation (45 dB).

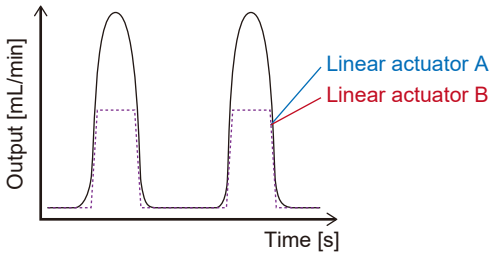

■ CONT (Continuous)

The two actuators of this pump reciprocate, mostly in turn, to minimize pulsation for a steady pump flow to your system and also reduce the operation noise (40 dB).

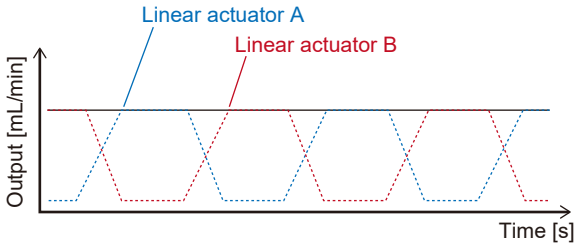

Other functions

■ MAX speed (of each range)

When the pump is running in the MAN mode or stops in the WAIT mode, while the MAX key is pressed, the pump runs at the maximum speed of each range selected. This function is provided, for example, for enabling Clean-In-Place (CIP).

*This function is NOT enabled while the pump is running in the batch mode.

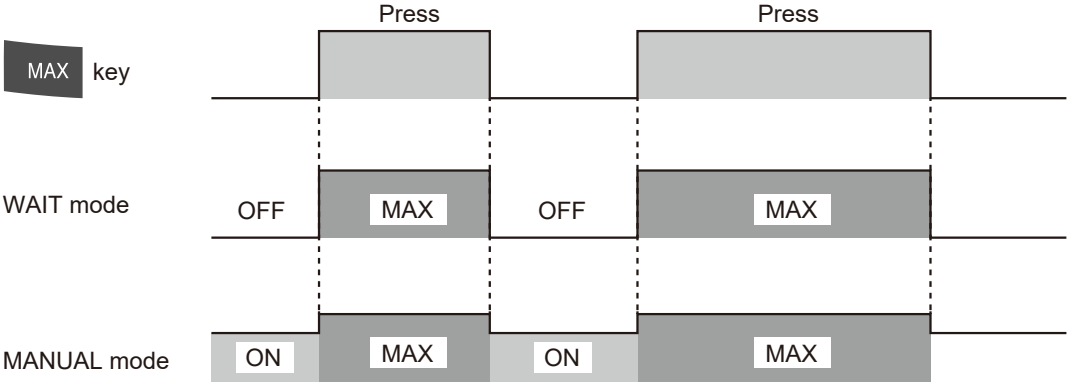

■ Priming speed (see page 29)

When the pump is running in the MAN mode or stops in the WAIT mode, while both the MAX key and the CAL key are pressed, the pump runs at the maximum speed to expel air from the pump and tubing. The difference from the MAX speed feature is, the priming speed runs the pump at its full speed (100 mL/min), no matter what range option is selected. Before using this function, you would need to depressurize your system or establish an independent priming system to your tubing system. See page 29 as well.

Priming speed is mainly used when:

- Pump is primed (the pump with ruby valve ball/sapphire valve seat needs manually primed with the attached syringe in advance.),
- Gas bubbles are generated in the pump and plumbing and you need to expel gas,
- Pump output fluctuates, and
- Pump output is too slow to expel air with the MAX key.

*This function is NOT enabled while the pump is running in the batch mode.

NOTE

The smaller tube I.D., the more tubing resistance (the more pressure to tubing connections). If this priming speed (100 mL/min) is used with the pump incorporated in your existing tubing system, it may exceed the allowable maximum pressure of your system. Keep zero system pressure during priming or establish an air vent line of a 4 mm or a wider I.D. that route back to the chemical tank to avoid solution spray from tubing connections.

■ STOP function (see page 41)

The LR series pump also includes a STOP function that allows an external signal to stop the operation of the pump. Halting this signal resumes pump operation.

■ Tuning (see page 62)

Tunes the linear actuators for accurate dosing every time when the ERROR 21 (unsteady output) appears on the display or every time when the valve module, the module gasket, or the diaphragm is replaced.

■ Initialization (see page 62)

Initialization returns all the user settings such as operating parameters to the uncalibrated factory default setting with:

- "MANUAL" to the MODE option,
- "0.3MPa-100mL/min" to the RANGE option,
- "SIN" to the STROKE option, and
- "100 mL/min" to the MAN/BATCH speed.

■ Error messages and error signal (see page 61)

If the pump has fallen into an error condition, a corresponding error message will be shown and the OUT 1 error signal, if it is enabled over the output mode setting menu, is outputted to an external device.

Remote communication (COM mode)

The LR series pump provides MODBUS-RTU communication with an external device (PC, PLC) over the RS-485 cable. See page 52 to run the pump in the COM mode.

Part names

Pump

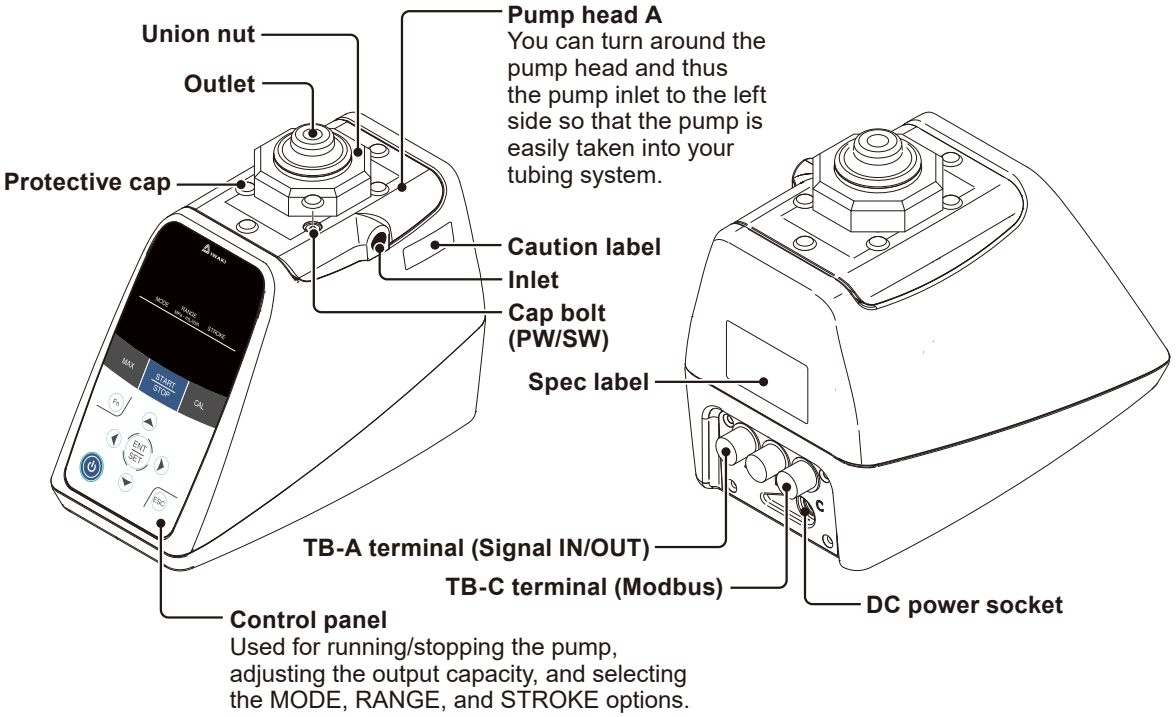

*Do not clean the pump or nameplate with a solvent such as benzine or thinner. This may discolour the pump or erase printing. Use a dry or damp cloth or a neutral detergent.
*Before cleaning the pump, disconnect the AC adapter from the mains electricity. Otherwise, an electrical shock or a short circuit may result.

Operational panel

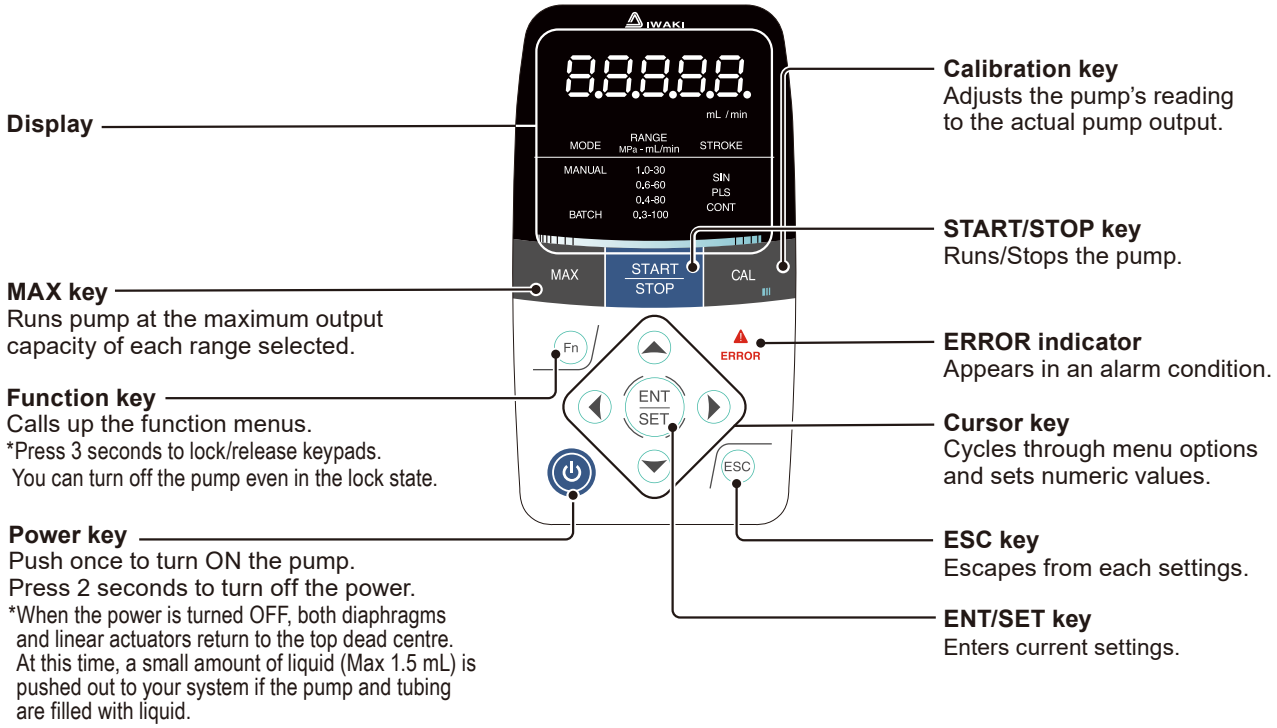

Control display

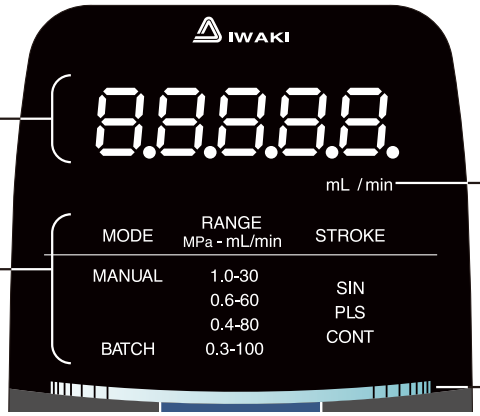

Alphanumeric field
Shows the pump output and alphabetic characters.

Setting field
Shows the main setting fields of MODE, RANGE, and STROKE.

mL/min field
Appears when the numeric value is output capacity.

LED progress bar
Shows the pump status.

■ Basic displays & Pump states

Display code	Alphabet	Status
oY	OK	Asking if your setting is OK or not.
StbY	STBY	Tuning mode or maintenance mode are ready to start.
Mnt	MNT	Maintenance mode is selected for replacing the pump head A and the diaphragm.
UAtH	UATH	In the maintenance mode, the diaphragm tops out at the TDC (Top Dead Centre) position so that the diaphragm is replaced.
AtH	ATH	In the maintenance mode, the diaphragm bottoms out at the BDC (Bottom Dead Centre) position so that the pump head A is replaced.
tUnE	TUNE	Tuning mode where the pump adjusts the linear actuators to operate best. Mainly used after the pump is initialized to the factory default setting or an error status is resolved.
ProC	PROC	Appears while the linear actuators are tuned.
CAL	CAL	Calibration mode, which adjusts the pump's reading to the actual output capacity, is performed in the two different ways: one is "Push to Calibrate" and the other is "Count then Calibrate". See the Calibration section on page 34.
StoP	STOP	Visible when the pump is stopped via external signal.
out-A	OUT-A	Select the OUT-A or OUT-B option according to the external device to be connected. See page 25 as well.
out-b	OUT-B	
LHt	LHT	Light adjustment mode adjusts the brightness of the control display and the LED bar. There are four level brightness, and the Lv1 is brightest.
dEF	DEF	The pump reverts back to the factory default setting if confirmed with this display code.
MAX-Q	MAX-Q	The max output capacity, which is defined by the calibration results, is shown if selected with this display code.
VEr	VER	The current software version of this pump is shown if selected with this display code.
Air	AIR	Shows up while the pump is running at the priming speed with the MAX key and the CAL key.
Err 1	ERR 1	Shows up when the pump is in an error condition. See the Error messages section on page 61 for more error codes and info.

Display code	Alphabet	Status
	LOCK	Blinks every 2 seconds in the keypads lock state.
	OP-MD	Change the operation mode of the pump.
	STD	Select the optimal operation mode between the STD mode (Standard) and COM mode (Communication). See page 42 to run the pump in the COM mode.
	COM	
	SID	Set the slave ID (slave address) in the COM mode.
	TERM	Set the 120Ω termination resistor for the RS-485 in the COM mode.
	TMON	Select ON (TMON) to set the termination resistor or OFF (TMOFF) option according to your system in the COM mode.
	TMOFF	
	BAUD	Set the baud rate in the COM mode.
	BCAST	Set the broadcast unit identifier address in the COM mode.

Identification codes

Each code represents the following information.

Pump

LR - TR 1 S S F 1 E - ___
a b c d e f g h i

a. Series name

b. Pump type
TR : Twin, RS-485 communication

c. Linear actuator size
1 : 40 W

d. Pump head A and B
S : SUS316
P : PEEK
*The "P" code of the pump head is only used for the RS valve module unit.

e. Valve
S : SUS316, SS valve module unit
R : Ruby/Sapphire, RS valve module unit

f. Gasket material
F : PTFE

g. Pump inlet/outlet size
1 : Rc⅛" female thread

h. Area
E : Europe

i. Special version
No code : Standard models
: Customized models will be suffixed with the special version codes.

Installation

This section describes the installation of the pump, piping and wiring. Read through this section before service is performed.

Points to be observed

- Risk of electrical shock. Be sure to turn off power to stop the pump and related devices before service is performed.
- If you notice any abnormal or dangerous conditions, suspend operation immediately and inspect/solve problems.
- Do not place explosive or flammable material near the pump.
- Use of a damaged pump could lead to an electric shock or death.
- Spill precautions. Ensure protection and containment of any liquid drained, leaked, or otherwise released from the pump or system. Use secondary containment as necessary, especially when handling flammable, toxic, corrosive, or high-temperature liquids (60°C or higher).

Pump mounting

1 Select a suitable place

- Select a level location, free from vibration, that won't hold liquid. If the pump is not installed level, output may be affected.
- Allow sufficient space around the pump for easy access and maintenance.
- Install the pump as close to the supply tank as possible.

2 Make up a suction lift system

Mount the pump at or higher than the level of liquid in the supply tank if possible.
The maximum suction lift varies with the valve module unit, the RANGE setting, and the STROKE setting.

Max suction lift

<table>
<tr><th>Valve module unit</th><th>Range options</th><th>SIN</th><th>PLS</th><th>CONT</th></tr>
<tr><td rowspan="4">SS</td><td>1.0MPa - 30mL/min</td><td rowspan="2">0.5 m</td><td rowspan="4">0.5m</td><td rowspan="2">0.5 m</td></tr>
<tr><td>0.6MPa - 60mL/min</td></tr>
<tr><td>0.4MPa - 80mL/min</td><td rowspan="2">1.0 m</td><td rowspan="2">1.0 m</td></tr>
<tr><td>0.3MPa - 100mL/min</td></tr>
<tr><td>RS</td><td>All ranges</td><td colspan="3">0.5 m</td></tr>
</table>

*For the bold number (0.5 m with SS valve module), the shorter suction line is desirable.

Plumbing

Depending on how your system is built up, you can turn around the pump head A thus the pump inlet to the left side so that the pump is in a better position in your plumbing. See page 70 as well.

System overview

The following devices are needed to monitor/safely operate the metering pump which by nature keeps increasing a system pressure if any point is blocked. Be sure to install, or personal injury or property damage may result.

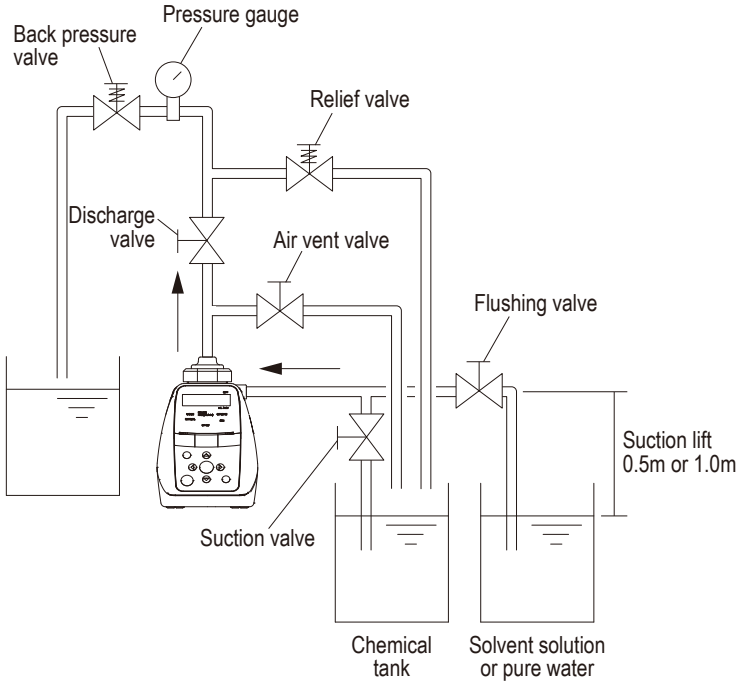

■ Discharge & Suction valves

Install a ball valve on the discharge line, as close to the pump outlet, for the convenience of maintenance or shutting off a flow, as well as the other ball valve on the suction line, as close to the pump inlet.

■ Air vent line

Mount an air vent line and a valve between the discharge valve and the pump outlet so entrained air can be expelled from the system successfully. Or air ingress from the joints in the tubing system may cause air lock or inconsistent flow (low repeatability).

■ Back pressure valve

If siphoning is a possibility, or if pumping downhill into open atmosphere (open tank), a separate back pressure/ anti-siphon valve must be installed.

■ Relief valve

Operation without a pressure relief safety valve installed could result in catastrophic failure and a dangerous condition if the discharge line is closed for any reason during operation. Install a pressure relief safety valve as close to the pump discharge as possible. Its setting pressure should not exceed the pressure permissible for the pump and tubes.

■ Pressure gauge

Install a pressure gauge to monitor the discharge line pressure.

Pump inlet/outlet connections

Arrange the pump inlet and outlet according to a piping system in which the pump is incorporated.

■ Tube connection

1 Purchase separately the R⅛" male quick connectors and a tubing

Such a tube should be pressure-/corrosion-resistant to a specific operating condition.

*Suction tubing with a smaller I.D. than 2 mm will adversely affect the pump output.

2 Cut the tube ends flat

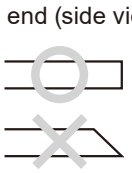

3 Wrap a sealing tape two to three turns around R⅛" male quick connectors

*Be careful not to turn too many, or connection points may break.

*Also, debris may enter the pump. Apply the sealing tape onto the threaded area only.

NOTE

Do not use a liquid sealant which could enter into the pump.

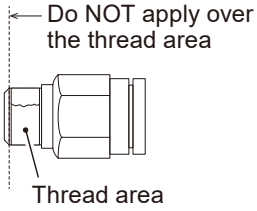

4 Use a spanner or an adjustable wrench to secure the R⅛" male quick connectors to the pump inlet and outlet

Hold the pump head A while screwing the connectors.

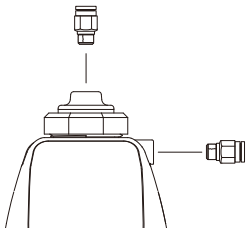

5 Connect tubes into the quick connectors

Use the tube that matches your quick connector and ensure the tube is caught and won't come off under pressure.

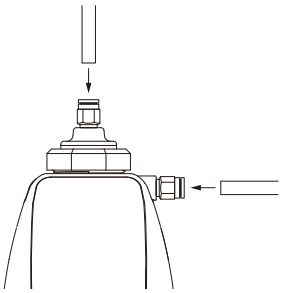

NOTE

Do not use excessive force when tightening fittings to the PEEK pump head. Overtightening may damage components around the pump inlet and outlet. Wrap the R⅛" male fittings with sealing tape—two full turns—prior to installation.

Recommended sealing tape: VALQUA Tape Seal (0.1 mm thickness, 8 mm width)

Tighten the fittings to the inlet/outlet ports to a torque of 1.3 N·m. If a torque wrench is not available, use an adjustable spanner to tighten the fittings approximately four full turns after initial contact.

Wiring

Wiring for power voltage, earthing, external signals and RS-485.

Points to be observed

- Electrical work should be performed by a qualified electrician. Always observe applicable codes or regulations.
- Do not perform wiring work while electric power is on. Disconnect your AC adapter from the mains electricity. Otherwise, an electrical shock or a short circuit may result.
- Always use the AC adapter that is applicable to the pump and a stable mains electricity (100 - 240 VAC). Do not use the power that comes from an APR (AC Power Regulator) or an AC/DC inverter which could damage the PCBA of the pump.
- An electronic circuit may break. Avoid branch circuits that also supply power to heavy or other equipment that could generate electrical interference.

Surge voltage

The electronics within the pump can be damaged by excessive surges in voltage. Do not install the pump near high-power electrical equipment that generates high surge voltages (200V or higher). If necessary,

- install a surge suppression device (such as a varistor with a resistance greater than 2000A) or,
- a noise reducing transformer at the pump's power connection.

Electromagnetic compatibility (EMC) for the Modbus operation

The EMC testing is conducted using a 5 m signal cable and an LR pump with the TM OFF setting (the termination resistor is set to OFF). Verify that your system conforms to the EMC directive when controlling your LR pump:

- simultaneously with other LR pumps.
- using a longer or shorter signal cable than 5 m.
- which sets the termination resistor to the TM ON communication setting option.

Wire connection with external devices

■ Signal input/output

Points to be checked

- Check that power voltage is turned off.

Purchase separately a cable with the Binder M12-A five contact female cable connector (Part no. 99-0436-10-05, M12, series 713) when electrically-connecting an external device to the signal input and output of the pump.

1 Make sure the pump and related devices are NOT electrically-connected with mains electricity

2 Remove the protection cap from the TB-A DIN male connector of the pump

3 Connect your female connector cable to the TB-A DIN connector

Before tightening the locking collar, make sure to catch the 5 pins with the female connector.

*If the 5 pins are wired internally in the pump at this point, and if an external device is connected over the female connector cable, then the pump is ready to run corresponding to the user setting (page 33) and the external signal.

*The BATCH signal input circuit (Pin 2 - 4) and the STOP signal input circuit (Pin 3 - 4) support an external device with isolated NPN open collector (max allowable residual voltage: 1.0 VDC) or with a mechanical relay).

NOTE

- Do not lay on the DIN signal cable in parallel with a power cable. Otherwise, the electromagnetic induction noise is generated and malfunction or failure may result.
- The BATCH signal input (Pin 2 - 4) and the STOP (Pin 3 -4) are Polarity Sensitive. When using an external device with isolated NPN open collector, be sure to connect the POSITIVE to POSITIVE and GND to GND with each connection.
- When using an external device with SSR for the BATCH signal input (Pin 2 - 4) or the STOP (Pin 3 - 4), such a semiconductor relay must be capable of handling the maximum applied voltage from the pump (12 VDC with 10 mA). See specs of the selected SSR. The OMRON G3TA-IDZR02S-US SSR or the G3TA-IDZR02SM-US SSR at least meets the requirement.
- When using a mechanical relay for the BATCH signal input (Pin 2 - 4) or the STOP (Pin 3 - 4), such a relay must support the maximum applied voltage from the pump (12 VDC with 10 mA). Also, the minimum application load of the relay should be 5mA or below.
- Insert the optional Binder female connector as far as it will go and then tighten the locking collar to make it secure.

■ Modbus communication

Points to be checked

- Check that power voltage is turned off.

Purchase separately a twisted pair cable (recommended cable length: 5m) with the Binder M12-A five contact female cable connector (Part no. 99-0436-10-05, M12, series 713) when electrically-connecting the pump to your controlling device for Modbus communication.

1 Make sure the pump and related devices are NOT electrically-connected with mains electricity

2 Remove the protection cap from the TB-C DIN male connector of the pump

3 Connect your female connector cable to the TB-C DIN connector

Before tightening the locking collar, make sure to catch the 5 pins with the female connector.

End terminals

Use the TB-A terminal for electrical wiring between the pump and an external device. Use Pin 2 for the BATCH signal input, Pin 3 for the STOP signal input, Pin 1 and Pin 5 for either the Alarm signal output or the Batch completion signal output. Use the TB-C terminal for electrical wiring to remotely communicate with the pump.

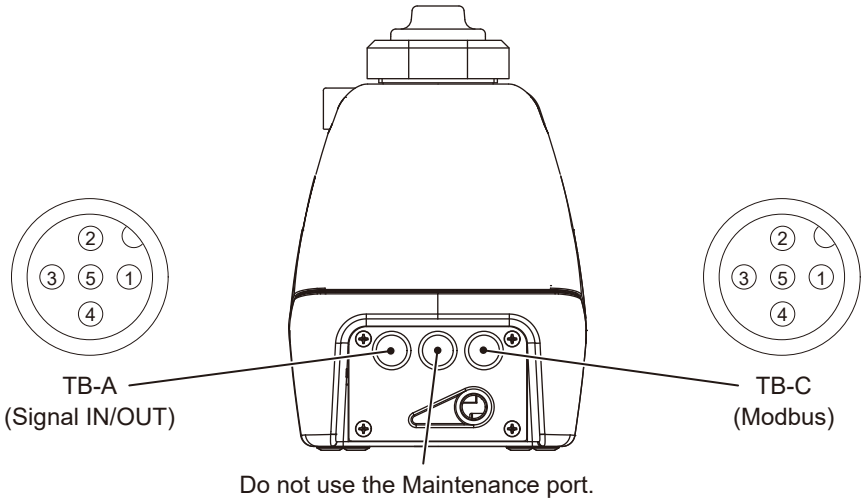

Signal IN/OUT port

Pin 1	TB-A-1	Pulse output, Open collector	ALARM/BATCH output
Pin 2	TB-A-2	Digital input that supports a device with isolated open collector or dry contact mechanical relay.	BATCH input
Pin 3	TB-A-3	Digital input that supports a device with isolated open collector or dry contact mechanical relay.	STOP input
Pin 4	TB-A-4	GND	Ground
Pin 5	TB-A-5	Pulse output, Open collector	ALARM/BATCH output

*Open collectors are Polarity Sensitive. Be sure to connect the POSITIVE to POSITIVE and GND to GND with each connection.

Modbus communication port

Pin 1	TB-C-1	RS-485 (A)	Modbus
Pin 2	TB-C-2	RS-485 (B)	Modbus
Pin 3	TB-C-3	N.C.	N.C.
Pin 4	TB-C-4	GND	Modbus-Signal Ground
Pin 5	TB-C-5	N.C.	N.C.

*RS-485 is Polarity Sensitive. Be sure to connect the POSITIVE to POSITIVE and GND to GND with each connection.
*When the power is turned on/off with the Power key or the power plug, electrical noise is temporarily generated on the cables.

Wiring diagram

■ Signal input/output

STOP/BATCH input (mechanical relay)

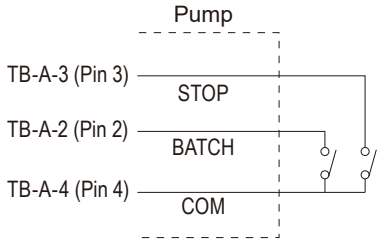

STOP/BATCH input (NPN open collector)

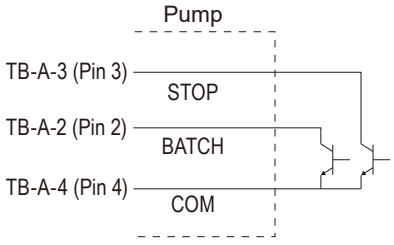

ALARM/BATCH completion output

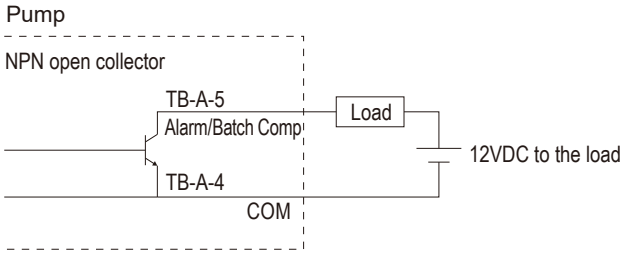

Maximum applied voltage to the contact: 25VDC with 10mA

*The STOP signal and the BATCH signal are Polarity Sensitive. Be sure to connect the POSITIVE to POSITIVE and GND to GND with each connection.

■ Modbus communication

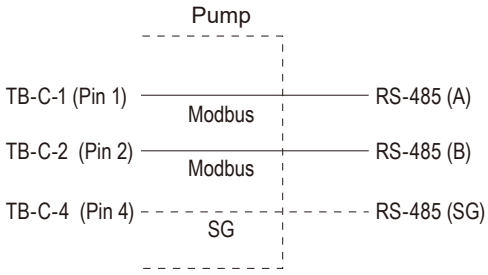

*RS-485 (A) and (B) are Polarity Sensitive. Be sure to connect the POSITIVE to POSITIVE and GND to GND with each connection.
*If necessary, connect the RS-485 (SG).
*When monitoring and controlling up to twenty pumps with a control device, daisy-chain their cables.

Pin assignment

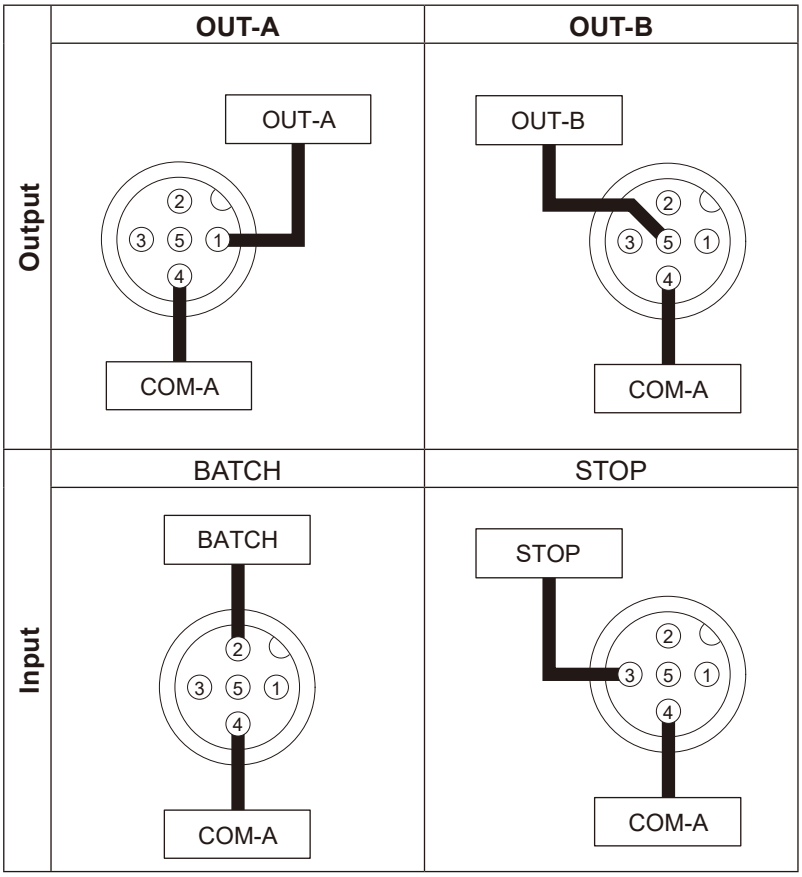

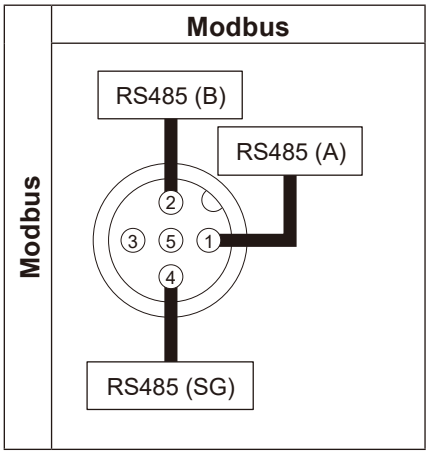

Operation

This section describes pump operation and programming. Run the pump after pipework and wiring are completed.

Before operation

First check tubing and wiring are correct. And then make commissioning, set the alarm/batch completion output, and calibrate the pump before starting operation.

Points to be checked

Before operation, check if:

- Liquid level in a supply tank is enough.
- Tubing is securely connected and is free from leakage and clogging.
- Discharge/suction valves on tubing are opened.
- During degassing, a draining pan (or container) is ready to collect liquid that comes out from the discharge tube end.

NOTE

- If gas bubbles in a liquid is a matter, use deaerated liquid only.
- If the chemical solution in your system is at 0.8 MPa or higher, you will see more gas bubbles in the liquid line and the pump which adversely affect output capacity. To minimize such a negative impact:
  - Further tighten the union nut for 30° from the hand-tight position,
  - Repeat the Max key and the Cal key step of the priming procedure,
  - Use the syringe provided and ensure air is fully eliminated (even to the SS valve module), and
  - Perform commissioning in actual operating conditions: tubing, liquid, pressure, and temperature.

Retightening of pump head fixing bolts

Six M3 pump head fixing bolts may loosen when plastic parts creep due to temperature change in storage or in transit. This could lead to a chemical leak. Tighten the bolts diagonally and evenly by 0.7 N•m before initial operation and at regular intervals (every month).

Retightening of the union nut

Tighten the union nut before running the LR pump. If it is loosened, not only a low pump output but also solution spray could result.

1 Hand-tighten the union nut

2 Use the provided adjustable wrench to turn the union nut further 30° clockwise

Priming

The gas in the pump and tubing is an obstacle and needs to be expelled before the pump is started. Especially:

- When the pump starts to run for the first time.
- When the pump output is too low.
- After liquid is replaced in a supply tank.
- After a long period of stoppage.
- After maintenance and inspection are performed.

■ Pump with RS valve module

The LR pump with the RS valve module is NOT capable of self-priming. Use the provided syringe for priming the pump every time the pump is used with the dry valve.

1 Close the discharge valve and open the air vent line

If you do not have the air vent line in your system, open the discharge valve and route the discharge line from the system to a draining pan.

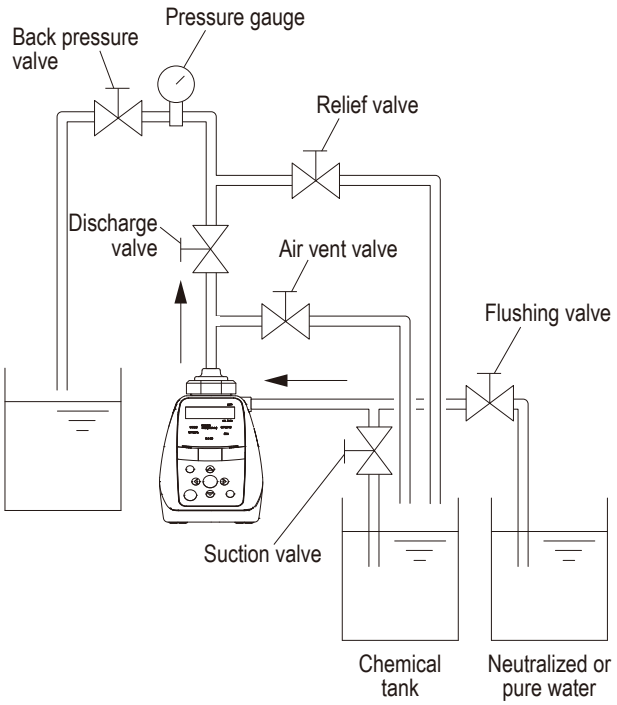

2 Use the syringe provided to the end of the air vent line end and manually introduce liquid into the pump and the discharge line

If you do not have the air vent line, use the syringe to the end of the discharge line and manually prime the pump.

Repeat this process until gas bubbles is eliminated.

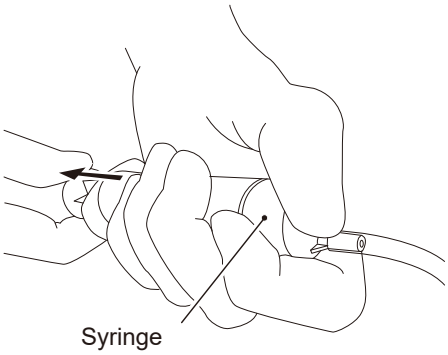

3 Remove the syringe from the air vent line (or discharge line if air vent line is not there)

4 Connect the DC power plug to the pump

Make sure it is properly connected.

*Always connect the AC adapter to the pump first, then the AC power plug to the power outlet.

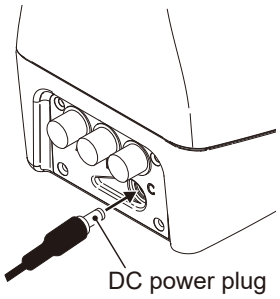

5 Plug in the AC power plug to the power outlet

The LED bar lights on the operation panel.

6 Push the key and turn on power

The display shows the desired output.

7 Push the MAX and the CAL key

While both keys are pressed, the pump runs at the maximum speed (100 mL/min). Push them until gas bubbles are completely eliminated from the pump.

8 Close the air vent valve and open the discharge line

If you do not have the air vent line in your system, route the discharge line back to the system.

NOTE

- The smaller tube I.D., the more tubing resistance (the more pressure to tubing connections). If this priming speed (100 mL/min) is used with the pump incorporated in your existing tubing system, it may exceed the allowable maximum pressure of your system. Fully open an air vent line (or a discharge line if you don't have an air vent line) of a 4 mm or a wider I.D. that route back to the chemical tank to avoid solution spray from tubing connections.
- A micropipette in the microreactor could be the weakest connection point where solution spray happens. Use measures so that the connection point withstands the possible maximum pressure which could happen during degassing.

■ Pump with SS valve module

The pump with the SS valve module code is capable of self-priming. You can just press the MAX and the CAL key to run the pump at its full speed (priming speed) no matter what range option is selected. Or you can use the syringe to manually prime the pump if needed according to page 29.

1 Close the discharge line and open the air vent line

If you do not have the air vent line in your system, open the discharge valve and route the discharge line from the system to a draining pan.

2 Connect the DC power plug to the pump

Make sure it is properly connected.

*Always connect the AC adapter to the pump first, then the AC power plug to the power outlet.

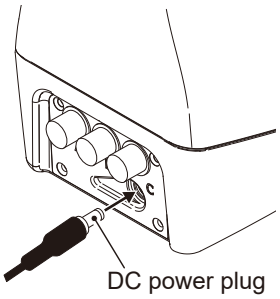

3 Plug in the AC power plug to the power outlet

The LED bar lights on the operation panel.

4 Push the key and turn on power

The display shows the desired output

5 Push the MAX and the CAL key

While both keys are pressed, the pump runs at the maximum speed (100 mL/min). Push them until gas bubbles are completely eliminated from the pump.

6 Close the air vent valve and open the discharge line

If you do not have the air vent line in your system, route the discharge line back to the system.

NOTE

- The smaller tube I.D., the more tubing resistance (the more pressure to tubing connections). If this priming speed (100 mL/min) is used with the pump incorporated in your existing tubing system, it may exceed the allowable maximum pressure of your system. Fully open an air vent line (or a discharge line if you don't have an air vent line) of a 4 mm or a wider I.D. that route back to the chemical tank to avoid solution spray from tubing connections.
- A micropipette in the microreactor could be the weakest connection point where solution spray happens. Use measures so that the connection point withstand the possible maximum pressure which could happen during degassing.

Commissioning

Always make commissioning when first mounting the pump in your system or resuming operation after a long period of stoppage. Clogged plumbing or a chemical leak from connection points ends up with failure of your dosing system.

1 In the WAIT mode with the white LED bar, push the ENT/SET key and then the up and down keys to select the MANUAL option that blinks

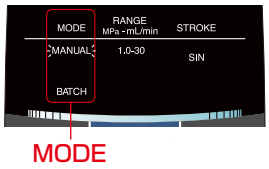

2 Push the ENT/SET key and select the RANGE option corresponding to your application

The 1.0 MPa - 30 mL/min, 0.6 MPa - 60 mL/min, 0.4 MPa - 80 mL/min, or the 0.3 MPa - 100 mL/min option.

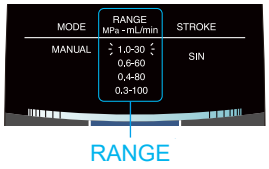

3 Push the ENT/SET key and select the STROKE option corresponding to your application

Select the SIN (sine), PLS (pulse), or CONT (continuous) option.

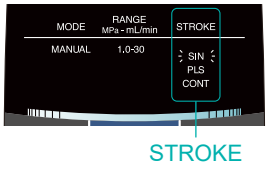

4 Push the ENT/SET key and adjust the MAN speed (mL/min) of the pump corresponding to your application

Use the right and left keys to move between digits.

Use the up and down keys to change the value.



5 Push the ENT/SET key. "oK" will appear on the display

Push the key again to confirm.

6 Push the START/STOP key to run the pump in your system

Check for a clogged plumbing or a chemical leak from connection points.

7 Push the START/STOP key to stop the pump

*The option or the numeric digit that blinks is where you are.
*The ESC key goes back to the first step of the setting.
*Commissioning is needed for both Manual and Batch control modes.

Output mode setting

Select the output mode corresponding to the OUT-A or OUT-B output wiring.

Display code	Alphabet	Status
	OUT 0	No output
	OUT 1	Outputs an alarm signal when an error is occurred.
	OUT 2	Outputs the End of Batch signal when a batch is finished.

1 In the WAIT mode with the white LED bar, push the Fn key to open the Function menu

Use the right and left keys to cycle through the function menu.

2 Select the "OUT-A" or "OUT-B" option and push the ENT/SET key

Select either option which wiring is actually done.

3 Select the "OUT0", "OUT1", or "OUT2" option and push the ENT/SET key

"oK" will show up.

4 Push the ENT/SET key again to confirm

*The ESC key goes back to the previous setting menu.

Perform a calibration

Calibrate the pump in your plumbing system with an actual chemical liquid, so that you'll read the real output capacity from the pump. The longer calibration time, the more accuracy you will have; however, it depends on the volume of your supply tank. Frequent calibration also helps correct reading.
The LR linear pump has two calibration methods of "Push to Calibrate" and "Count then Calibrate" depending on how the pump is installed in your system. Select the first option if the liquid comes with no delay or the later option if it delays.

*Before shipped from our factory, the pump is calibrated with pure water at room temperature and the maximum allowable output capacity; however, you will need to recalibrate the pump with an actual liquid and plumbing pressure.

Push to Calibrate

Mount the pump into your system. Provide a small ball valve to the discharge tube to shut off liquid and disconnect the injection point from the system. Put the injection point into a calibration beaker (use an electronic scale that the beaker weight is deducted in advance) and reproduce the back pressure of your system by adjusting the small ball valve. Push to Calibrate is used when you expect liquid comes with no delay. The liquid delay often happens by a small tube I.D. or any other factors.

1 In the WAIT mode with the white LED bar, push the ENT/SET key and then the up and down keys to select the MANUAL option

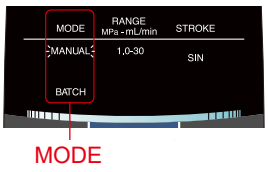

2 Push the ENT/SET key and select the RANGE option corresponding to your application

The 1.0 MPa - 30 mL/min, 0.6 MPa - 60 mL/min, 0.4 MPa - 80 mL/min, or the 0.3 MPa - 100 mL/min option.

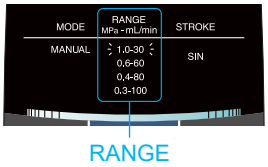

3 Push the ENT/SET key and select the STROKE option corresponding to your application

Select the SIN (sine), PLS (pulse), or CONT (continuous) option.

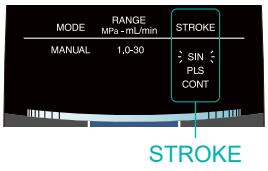

4 Push the ENT/SET key and adjust the MAN speed (mL/min) of the pump corresponding to your application



5 Push the ENT/SET key. "oK" will appear on the display

Push the key again to confirm.

6 Push the CAL key and enter the calibration speed (mL/min)

The calibration speed is valid only for this calibration mode. Usually it should be the same value with the MAN speed (mL/min) of Step 4.



7 Push the ENT/SET key and enter the calibration volume (mL)

The calibration volume is valid only for this calibration mode.



8 Push the ENT/SET key to get ready with the Stby (Standby)

9 Route the discharge line to a calibration beaker

The beaker on an electronic scale that is adjusted to zero weight in advance.

10 Push the ENT/SET key to run the pump

The pump starts at the calibration speed (mL/min) and stops when the calibration volume is met.

Also, a countdown starts to let you know the seconds that will take to finish the calibration.



NOTE

A countdown starts immediately as the ENT/SET key is pushed.

*The ESC key cancels the calibration and goes back to the WAIT mode.

11 Use an electronic scale to know how much volume exactly the pump discharges

12 Enter the actual liquid volume obtained and push the ENT/SET key once.

"oK" will appear on the display.

NOTE

If the actual liquid volume is less than two-thirds of the calibration volume you entered at Step 7, "oK" won't appear but a low threshold, 40 mL in this instance as it is two-thirds of 60 mL, will appear instead. Push the ESC key to get back to the WAIT mode. See the troubleshooting section on page 59 and remove the root cause, also.

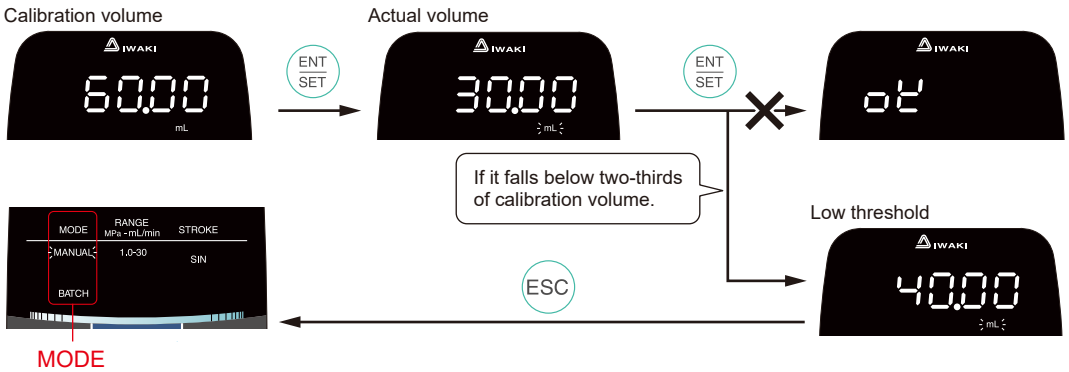

13 Push the ENT/SET key again to finish calibration

*The ESC key goes back to the first step of the setting.

Count then Calibrate

The "Push to Calibrate" method starts immediately right after the ENT/SET key is pushed; however, it is often the case that liquid does not come out at the right time especially when a small discharge tube I.D. is used or there is a large resistance in the line. The "Count then Calibrate" is an alternative method to catch up with such a delay. Mount the pump into your system. Provide a small ball valve to the discharge tube to shut off liquid and disconnect the injection point from the system. Put the injection point into a calibration beaker (use an electronic scale that the beaker weight is deducted in advance) and reproduce the back pressure of your system.

1 In the WAIT mode with the white LED bar, push the ENT/SET key and then the up and down keys to select the MANUAL option

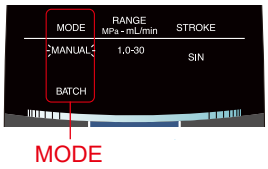

2 Push the ENT/SET key and select the RANGE option corresponding to your application

The 1.0 MPa - 30 mL/min, 0.6 MPa - 60 mL/min, 0.4 MPa - 80 mL/min, or the 0.3 MPa - 100 mL/min option.

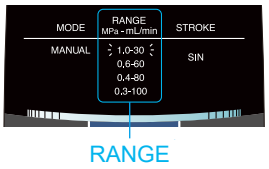

3 Push the ENT/SET key and select the STROKE option corresponding to your application

Select the SIN (sine), PLS (pulse), or CONT (continuous) option.

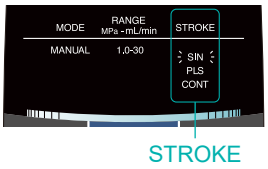

4 Push the ENT/SET key and adjust the MAN speed (mL/min) of the pump corresponding to your application



5 Push the ENT/SET key. "oK" will appear on the display

Push the key again to confirm.

6 Calculate the measuring time by the formula of:

Measuring time = Calibration volume (b) ÷ Calibration speed (a) × 60

*The larger calibration volume (b) is, the better accuracy you will have; however, it should not exceed the supply tank capacity of your system which could result in an empty tank.

7 Route the discharge line to a calibration beaker

The beaker on an electronic scale that is adjusted to zero weight in advance.

8 Push the START/STOP key to run the pump

A liquid would delay in coming out depending on discharge line resistance. Start countdown (the calculated measuring time) right when the liquid is pumped into the calibration beaker.

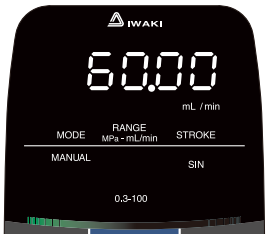

9 Right when the measuring time has passed, push the START/STOP key to stop the pump

10 Take a note of the actual volume which the electronic scale reads

11 Push the Fn key

12 Use the right or left key to find the "CAL" menu and push the ENT/SET key

13 Enter the calibration speed (mL/min)

The calibration speed is valid only for this calibration mode. Usually it should be the same value with the MAN speed (mL/min) of Step 4.



14 Push the ENT/SET key and enter the calibration volume (mL)

The calibration volume is valid only for this calibration mode.
*You do no need to change this value at this point.



15 Enter the actual liquid volume (mL) that was noted at Step 10 while the "mL" blinks



16 Push the ENT/SET key once

"oK" will appear on the display.

NOTE

If the actual liquid volume is less than two-thirds of the calibration volume you entered at Step 14, "oK" won't appear but a low threshold, 40 mL in this instance as it is two-thirds of 60 mL, will appear instead. See the troubleshooting section on page 59 and remove the root cause.

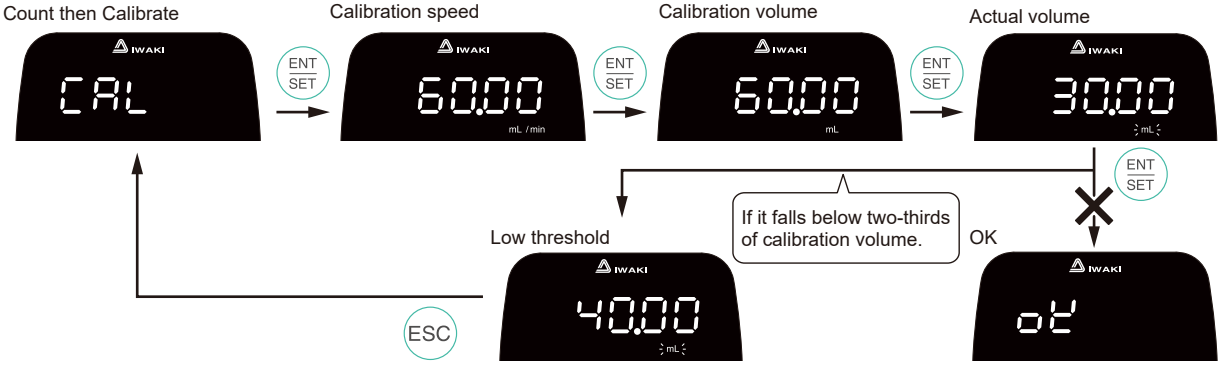

17 Push the ENT/SET key again to finish calibration

Check the max output capacity

The calibration result defines the max output capacity of your pump.

*If the pump operates faster than the max capacity in the MAN/BATCH mode, the ERROR 8 (High pump output) appears on the display.

*The max output capacity has 0.01 mL/min variance with the actual capacity depending on the CAL adjusted parameters.

1 In the WAIT mode, push the Fn key and select the MAX-q (MAX-Q) option

Push the ENT/SET key.

2 Check the max output capacity

Push the ENT/SET key.

3 Push the ENT/SET key again with the "OK" screen

Go back to the WAIT mode.

Operation using keypads or external signals

Select the Manual operation that manually adjusts the pump output or the Batch operation that adjusts correspondingly to the external dry signal.

Manual operation

Run the pump at the MAN speed.

1 In the WAIT mode with the white LED bar, push the ENT/SET key and select the MANUAL option

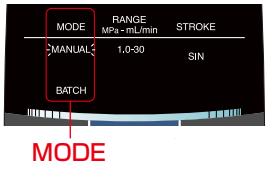

2 Push the ENT/SET key and select the RANGE option corresponding to your application

The 1.0 MPa - 30 mL/min, 0.6 MPa - 60 mL/min, 0.4 MPa - 80 mL/min, or the 0.3 MPa - 100 mL/min option.

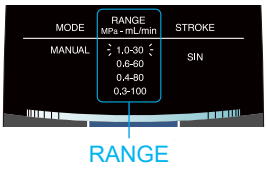

3 Push the ENT/SET key and select the STROKE option corresponding to your application

Select the SIN (sine), PLS (pulse), or CONT (continuous) option.

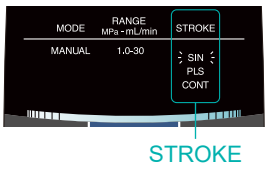

4 Push the ENT/SET key and adjust the MAN speed (mL/min) of the pump corresponding to your application



5 Push the ENT/SET key. "oK" will appear on the display

Push the key again to confirm.

6 Push the START/STOP key and manually run the pump at that MAN speed (mL/min)

The white LED bar turns green and starts.



*The ESC key goes back to the first step of the setting.
*See page 63 and conduct daily inspection.
*Also, during operation or stops in the manual mode, use of cursor key simply adjusts the MAN speed. Push the ENT/SET key to confirm.

Batch operation

Run the pump correspondingly to the external signal.

1 In the WAIT mode with the white LED bar, push the ENT/SET key and select the BATCH option

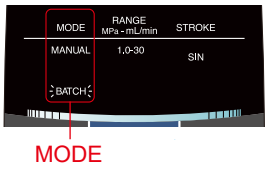

2 Push the ENT/SET key and select the RANGE option corresponding to your application

The 1.0 MPa - 30 mL/min, 0.6 MPa - 60 mL/min, 0.4 MPa - 80 mL/min, or the 0.3 MPa - 100 mL/min option.

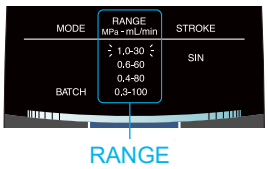

3 Push the ENT/SET key and select the STROKE option corresponding to your application

Select the SIN (sine), PLS (pulse), or CONT (continuous) option.

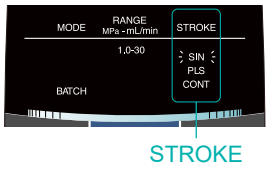

4 Push the ENT/SET key and set the BATCH speed (mL/min) of the pump corresponding to your application



5 Push the ENT/SET key and adjust the BATCH volume per external signal (mL) of the pump corresponding to your application



6 Push the ENT/SET key. "oK" will appear on the display

Push the key again to confirm.



7 Push the START/STOP key to get ready

Push of the ENT/SET key or a non-powered (dry contact) pulse signal from an external switch or solid-state device to the batch terminal will run the pump at the BATCH speed until it meets the BATCH volume. The green LED bar also runs.



*The ESC key goes back to the first step of the setting.

STOP function

The LR series pump also includes a STOP function that allows an external signal to stop the operation of the pump. A switch or solid-state device capable of switching 12 VDC at 10 mA can be connected to Pins 3 (positive) and 4 (negative) of the DIN male connector. Closing this circuit temporarily interrupts pump operation. Opening this circuit resumes the operation.

In Manual operation:

- When the STOP signal is received in MAN mode, the pump pauses with the "STOP" display.
- When the STOP signal is received in WAIT mode, the white LED bar blinks.
  *If the START/STOP key is pushed once in this state, then the "STOP" code shows up.

In Batch operation:

- When the STOP signal is received before a BATCH volume is finished, the pump pauses with "STOP" display.
- When the STOP signal is received in WAIT mode, the white LED bar blinks.
  *If the START/STOP key is pushed once in this state, then the STOP code shows up.

Before the pump is stopped

When the pump is paused by an external signal or at the end of batch volume, keep the pressure to 0.8 MPa or below. The Error 1 overpressure condition (see page 61) prevents the pump to restart if the pressure is higher than that rate.

When the pump is left stopped for 24 hr:

- Release the liquid and pressure from the pump and plumbing.
- Flush the inside of the pump and plumbing with clean water or cleaning liquid. Completely drain and depressurize them afterwards.
- Turn off the pump.
  *When the power is turned OFF, both diaphragms and linear actuators return to the top dead centre. At this point, a small amount of liquid (less than 1.5 mL) is also pushed out. Take this into consideration if this small amount of excess could be a problem.
- Remove the valve modules, clean (see page 68), dry off, and keep them in a good storage condition.

Operation using Modbus communication

This pump can be remotely monitored and controlled using a device.

Modbus operation

Select the COM (communication) mode through the OP-MD setting. The STD (standard) mode does not allow Modbus communication.

■ Operational functions in the COM mode

For any functions other than that listed below, use the pump in the STD mode.

Function		Description	
MODE	MANUAL	Adjust the MAN speed and run the pump.	
	BATCH	Adjust the BATCH speed (0.01 mL/min - 100 mL/min) and the BATCH volume (0.01 mL - 999.99 mL). Use a dry contact pulse signal or a trigger message over Modbus to run the pump until the batch volume is met.	
RANGE		1.0 MPa to 30 mL/min	Max discharge pressure: 1.0 MPa Output capacity: 0.01 mL/min - 30.00 mL/min
		0.6 MPa to 60 mL/min	Max discharge pressure: 0.6 MPa Output capacity: 0.01 mL/min - 60.00 mL/min
		0.4 MPa to 80 mL/min	Max discharge pressure: 0.4 MPa Output capacity: 0.01 mL/min - 80.00 mL/min
		0.3 MPa to 100 mL/min	Max discharge pressure: 0.3 MPa Output capacity: 0.01 mL/min - 100.00 mL/min
STROKE		SIN (Low noise and low pulsation)	
		PLS (Legacy solenoid pump pulsation)	
		CONT (Continuous steady flow with minimum pulsation)	
MAX speed of each range (MAX mode)		Run the pump at the maximum speed of each range selected.	
Priming speed (AIR mode)		Run the pump at the maximum speed to expel air from the pump and tubing.	
Count then Calibrate		Calculate the measuring time in advance and then run the pump for that time to correct the actual pump output. Then enter the measured volume to calibrate the pump.	
Tuning		Tune the linear actuators for accurate dosing.	
ERROR-LOG output		Save and output error logs (overpressure, overcurrent, power voltage, temperature, high output and unsteady output) to a control device (PC, PLC).	
Pump status monitoring		Monitor pump status from the control device.	
Pump identifier		Identify each pump from the control device.	
Total operation time		Calculate the total operation time.	
Total capacity		Calculate the total capacity by multiplying the total operation time by the pump speed (reference value).	
START/STOP		Start/stop the pump.	

■ Communication standard

No.	Item	Standard (setting)
1	Synchronous system	Asynchronous
2	Physical layer electrical specification	RS-485, two-wire half-duplex
3	Transmission speed	19200 bps/38400 bps
4	Data bits	8 bits
5	Parity bit	None
6	Start bit	1 bit-Lo
7	Stop bit	1 bit
8	Bit order	Least Significant Bit first (LSB)

Modbus specification

■ Communication protocol

This pump supports the Modbus-RTU protocol.

Points to be checked

- A master should access each register with correct words.
- After receiving a response for the following registers, a master should make certain intervals to send a next request to the slave (pump).

	Min. interval
Registers categorized with" C"	100 ms
Others	50 ms

No.	Item	Description	
1	Communication protocol	Modbus-RTU	
2	Communication	Between single master and multiple slaves	
3	Broadcast	Broadcast unit identifier address, which is configured in a slave (pump), receives broadcast message. A master receives no response for the broadcast message. Access each register within the specified data range. Broadcast address: 42999 → Starting address (0B B6) Release the STOP signal: 11→ (00 00 00 0B) 00 10 0B B6 00 02 04 00 00 00 0B	
4	Header/Trailer (Interval of each message)	At start/end of message frame	A silent interval should be at least 3.5 character times.
5	Slave address	1-247	
6	Function code	0x04	Read Input Registers (R)
		0x03	Read Holding Registers (R)
		0x06	Write Single Holding Register (W)
		0x10	Write Multiple Holding Registers (W)
7	Data type	Input Register	30001-39999
		Holding Register	40001-49999
8	Data byte order	Big-endian	
9	Error check	CRC-16	
10	Response *If the master receives no response, send the same request again.	Success	Normal response
		Slave address doesn't match.	No response
		CRC error	No response
		Abnormal process	Exception response

No.	Item	Description	
11	Exception response	Exception code 01	Illegal function
		Exception code 02	Illegal data address
		Exception code 03	Illegal data value
		Exception code 04	Improper pump status
		Exception code 05	Improper data value
12	Response timeout	100 ms or more	

Input Registers (Read only)

All binary data for a address can be packed into a 16-bit register.

■ Measured and monitored parameters

Register address	Item	Word	Data	Type	In operation	Description	Unit	Scaling
31003	Current flow rate -Hi	2	0-10000	-	Yes	Check a current flow rate when following mode is selected. MAN, BATCH, MAX, or CAL	mL/min	×100
31004	Current flow rate -Lo							
31005	Max output capacity -Hi	2	0-10000	-	Yes	Check max output capacity when MAN, BATCH or MAX mode is selected. In any other modes, max capacity is 0 mL/min. *After changing a mode, the pump takes 100 ms to complete the calculation of max capacity. *The max capacity can vary 0.01 mL/min with the actual capacity.	mL/min	×100
31006	Max output capacity - Lo							
31201	Pump status -Hi	2	0/1	-	Yes	Monitor pump status. Bit 0: STOP IN Bit 1: Error Bit 2: BATCH comp Bit 3: BATCH runs Bit 4: CAL comp Bit 5: TUNE comp Bit 6-27: Reserved Bit 28: Pump runs Bit 29: Reserved Bit 30: Reserved Bit 31: Pump stands by *Completion of the CAL, TUNE and BATCH is cleared by executing the command "Stop operation". The command "Trigger BATCH operation" or "Clear errors" also clears the BATCH completion.		
31202	Pump status -Lo							
31203	Error code -Hi	2	0-999	-	Yes	Check an error. 0: No error 48: Overpressure, overcurrent 49: Power voltage 52: Temperature 54: Unsteady output 158: High output *For any errors other than above, contact us with the error No.		
31204	Error code -Lo							

*If a scaling factor is defined, the value in the Data column is calculated as follows:
Example: 100 mL/min (current flow rate) × 100 (scaling factor) = 10000 (Data).

Register address	Item	Word	Data	Type	In operation	Description	Unit	Scaling
31205	Linear actuator status	1	0-3	-	Yes	Check linear actuator status. 0 | Linear actuator status bit0: 0 Actuators stop. bit0: 1 Actuators reciprocate. bit1: 0 Actuators are not at home position. bit1: 1 Actuators are at home position.		
31207	Standby status	1	0/1	-	Yes	Check whether the pump is in standby mode or not. 0 | Pump does not stand by. 1 | Pump stands by.		
31701	CAL actual volume (Max) -Hi	2	0-9999999	-	Yes	Check the max allowable liquid volume entered as a result of calibration.	mL	×10000
31702	CAL actual volume (Max) -Lo							
31703	CAL actual volume (Min) -Hi	2	0-9999999	-	Yes	Check the min allowable liquid volume entered as a result of calibration.	mL	×10000
31704	CAL actual volume (Min) -Lo							
31705	CAL countdown -Hi	2	0-9999999	-	Yes	Check how long the pump takes to finish the calibration. 0 | Seconds until the CAL completes.	s	
31706	CAL countdown -Lo							
31715	BATCH remaining volume -Hi	2	0-9999999	-	Yes	Check remaining liquid volume to meet the BATCH volume. 0 | Liquid volume that the pump runs for.	mL	×100
31716	BATCH remaining volume -Lo							

■ Logs

Register address	Item	Word	Data	Type	In operation	Description	Unit	Scaling
33001	Total operation time -Hi	2	0-4294 967295	-	Yes	• Check total operation time since the factory shipment. (The time cannot be reset.) • 0 (▲): Default value includes shipping test duration.	min	
33002	Total operation time -Lo							
33003	Wear parts time -Hi	2	0-4294 967295	-	Yes	• Check the total consuming time since the wear part has been used after the time is reset. • 0 (▲): Default value includes shipping test duration.	min	
30004	Wear parts time -Lo							
33005	Total capacity - Hi	2	0-4294 967295	-	Yes	• Check the total capacity that the pump discharges since the last reset. • 0 (▲): Default value includes shipping test volume.	mL	×100
33006	Total capacity - Lo							
33007	Run time -Hi	2	0-4294 967295	-	Yes	• Check the total operation time since the last reset. • 0 (▲): Default value includes shipping test duration.	mL	
33008	Run time -Lo							
33009	Run time 1 -Hi	2	0-4294 967295	-	Yes	• Check the total operation time since the last reset. • 0 (▲): Default value includes shipping test duration.	min	
33010	Run time 1 -Lo							

Register address	Item	Word	Data	Type	In operation	Description	Unit	Scaling
33011	Run time 2 -Hi	2	0-4294 967295	-	Yes	• Check the total operation time since the last reset. • 0 (▲): Default value includes shipping test duration.	min	
33012	Run time 2 -Lo							
33013	Run time 3 -Hi	2	0-4294 967295	-	Yes	• Check the total operation time since the last reset. • 0 (▲): Default value includes shipping test duration.	min	
33014	Run time 3 -Lo							
33101	Total operation time at Error (GEN0) -Hi	2	0-4294 967295	-	Yes	• Check the total operation time from the factory shipment until the error (GEN0) occurs. • Store up to 10 operation time with the circular buffer (GEN0-9). • 0 (▲)	min	
33102	Total operation time at Error (GEN0) -Lo							
33103	Total operation time at Error (GEN1) -Hi	2	0-4294 967295	-	Yes	• Check the total operation time from the factory shipment until the error (GEN1) occurs. • Store up to 10 operation time with the circular buffer (GEN0-9). • 0 (▲)	min	
33104	Total operation time at Error (GEN1) -Lo							
33105	Total operation time at Error (GEN2) -Hi	2	0-4294 967295	-	Yes	• Check the total operation time from the factory shipment until the error (GEN2) occurs. • Store up to 10 operation time with the circular buffer (GEN0-9). • 0 (▲)	min	
33106	Total operation time at Error (GEN2) -Lo							
33107	Total operation time at Error (GEN3) -Hi	2	0-4294 967295	-	Yes	• Check the total operation time from the factory shipment until the error (GEN3) occurs. • Store up to 10 operation time with the circular buffer (GEN0-9). • 0 (▲)	min	
33108	Total operation time at Error (GEN3) -Lo							
33109	Total operation time at Error (GEN4) -Hi	2	0-4294 967295	-	Yes	• Check the total operation time from the factory shipment until the error (GEN4) occurs. • Store up to 10 operation time with the circular buffer (GEN0-9). • 0 (▲)	min	
33110	Total operation time at Error (GEN4) -Lo							
33111	Total operation time at Error (GEN5) -Hi	2	0-4294 967295	-	Yes	• Check the total operation time from the factory shipment until the error (GEN5) occurs. • Store up to 10 operation time with the circular buffer (GEN0-9). • 0 (▲)	min	
33112	Total operation time at Error (GEN5) -Lo							
33113	Total operation time at Error (GEN6) -Hi	2	0-4294 967295	-	Yes	• Check the total operation time from the factory shipment until the error (GEN6) occurs. • Store up to 10 operation time with the circular buffer (GEN0-9). • 0 (▲)	min	
33114	Total operation time at Error (GEN6) -Lo							
33115	Total operation time at Error (GEN7) - Hi	2	0-4294 967295	-	Yes	• Check the total operation time from the factory shipment until the error (GEN7) occurs. • Store up to 10 operation time with the circular buffer (GEN0-9). • 0 (▲)	min	
33116	Total operation time at Error (GEN7) - Lo							

Register address	Item	Word	Data	Type	In operation	Description	Unit	Scaling
33117	Total operation time at Error (GEN8) - Hi	2	0-4294 967295	-	Yes	• Check the total operation time from the factory shipment until the error (GEN8) occurs. • Store up to 10 operation time with the circular buffer (GEN0-9). • 0 (▲)	min	
33118	Total operation time at Error (GEN8) - Lo							
33119	Total operation time at Error (GEN9) - Hi	2	0-4294 967295	-	Yes	• Check the total operation time from the factory shipment until the error (GEN9) occurs. • Store up to 10 operation time with the circular buffer (GEN0-9). • 0 (▲)	min	
33120	Total operation time at Error (GEN9) - Lo							
33121	Error code (GEN0) -Hi	2	0-4294 967295	-	Yes	• Check the error code for the total operation time at error (GEN0). • Store up to 10 error codes with the circular buffer (GEN0-9). • 0 (▲)		
33122	Error code (GEN0) -Lo							
33123	Error code (GEN1) -Hi	2	0-4294 967295	-	Yes	• Check the error code for the total operation time at error (GEN1). • Store up to 10 error codes with the circular buffer (GEN0-9). • 0 (▲)		
33124	Error code (GEN1) -Lo							
33125	Error code (GEN2) -Hi	2	0-4294 967295	-	Yes	• Check the error code for the total operation time at error (GEN2). • Store up to 10 error codes with the circular buffer (GEN0-9). • 0 (▲)		
33126	Error code (GEN2) -Lo							
33127	Error code (GEN3) -Hi	2	0-4294 967295	-	Yes	• Check the error code for the total operation time at error (GEN3). • Store up to 10 error codes with the circular buffer (GEN0-9). • 0 (▲)		
33128	Error code (GEN3) -Lo							
33129	Error code (GEN4) -Hi	2	0-4294 967295	-	Yes	• Check the error code for the total operation time at error (GEN4). • Store up to 10 error codes with the circular buffer (GEN0-9). • 0 (▲)		
33130	Error code (GEN4) -Lo							
33131	Error code (GEN5) -Hi	2	0-4294 967295	-	Yes	• Check the error code for the total operation time at error (GEN5). • Store up to 10 error codes with the circular buffer (GEN0-9). • 0 (▲)		
33132	Error code (GEN5) -Lo							
33133	Error code (GEN6) -Hi	2	0-4294 967295	-	Yes	• Check the error code for the total operation time at error (GEN6). • Store up to 10 error codes with the circular buffer (GEN0-9). • 0 (▲)		
33134	Error code (GEN6) -Lo							
33135	Error code (GEN7) -Hi	2	0-4294 967295	-	Yes	• Check the error code for the total operation time at error (GEN7). • Store up to 10 error codes with the circular buffer (GEN0-9). • 0 (▲)		
33136	Error code (GEN7) -Lo							
33137	Error code (GEN8) -Hi	2	0-4294 967295	-	Yes	• Check the error code for the total operation time at error (GEN8). • Store up to 10 error codes with the circular buffer (GEN0-9). • 0 (▲)		
33138	Error code (GEN8) -Lo							

Register address	Item	Word	Data	Type	In operation	Description	Unit	Scaling
33139	Error code (GEN9) -Hi	2	0-4294 967295	-	Yes	• Check the error code for the total operation time at error (GEN9). • Store up to 10 error codes with the circular buffer (GEN0-9). • 0 (▲)		
33140	Error code (GEN9) -Lo							

*Data marked with ▲ are the default value.
*Word on the table header represents the number of registers to read.

Holding Register (Read/Write)

Register address	Item	Word	Data	Type	In operation	Description	Unit	Scaling
42011	MODE	1	0/3/4/5/ 8/10	S	See the right column.	• Set an operation mode. 0: MAN (▲) 5: CAL 3: BATCH 8: AIR 4: MAX 10: TUNE *TUNE adjusted parameter is automatically stored (up to a million). • Following mode can be switched in operation. MAN↔MAX, MAN↔AIR Switch the mode and then execute the command to "Turn on standby mode".		
42021	RANGE	1	0-3	S	No	• Set a discharge pressure. 0: 1.0 MPa 2: 0.4 MPa 1: 0.6 MPa 3: 0.3 MPa (▲) *Every time changing the RANGE option, all of the flow rate, speed, volume and CAL adjusted parameter change together automatically. Calibrate the pump according to your application.		
42031	STROKE	1	0-2	S	No	• Select a STROKE option. 0: SIN (▲) 2: CONT 1: PLS		
42041	MAN flow rate -Hi	2	1-10000	S	Yes	• Set a flow rate for the MAN mode. Min/max rate depends on a RANGE options. 1.0 MPa: 1-3000 0.6 MPa: 1-6000 0.4 MPa: 1-8000 0.3 MPa: 1-10000 (▲) • When changing the flow rate in operation, request this register first and then execute the command to "Change the MAN flow rate".	mL/ min	×100
42042	MAN flow rate -Lo							
42161	BATCH speed -Hi	2	1-10000	S	No	• Set a BATCH speed. Min/max speed depends on a RANGE options. 1.0 MPa: 1-3000 0.6 MPa: 1-6000 0.4 MPa: 1-8000 0.3 MPa: 1-10000 (▲)	mL/ min	×100
42162	BATCH speed -Lo							

Register address	Item	Word	Data	Type	In operation	Description	Unit	Scaling
42201	BATCH volume -Hi	2	1-99999	S	No	• Set BATCH volume. 0.3 MPa-10000 (▲)	mL	×100
42202	BATCH volume -Lo							
42241	STOP signal	1	16/1	-	Yes	• Set a STOP signal to the pump. The external pulse input to the TB-A terminal can be used together. 16 (0x10): Release the STOP signal and run the pump. 1 (0x01): Apply the signal and stop the pump. If executing the command (9 or 11 on page 50) at the same time, a last request will be procceeded.		
42243	Blinking screen	1	0/1	S	No	• Select the fixed/blinking screen. 0 (0x00): Keep showing "COM". (▲) 1 (0x01): Alternate "COM" with a screen depending on the current pump mode.		
42251	CAL speed -Hi	2	1-10000	S	No	• Set a CAL speed. Min/max. speed depends on the RANGE options. 1.0 MPa: 1-3000 0.6 MPa: 1-6000 0.4 MPa: 1-8000 0.3 MPa: 1-10000 (▲)	mL/min	×100
42252	CAL speed -Lo							
42291	CAL volume -Hi	2	1-99999	S	No	• Set CAL volume. Min/max. volume depends on the RANGE options. 1.0 MPa: 1-30000 0.6 MPa: 1-60000 0.4 MPa: 1-80000 0.3MPa: 1 (▲) - 99999	mL	×100
42292	CAL volume -Lo							
42331	CAL actual volume -Hi	2	1-9999999	-	No	• Enter actual liquid volume as a CAL result. • Execute the command to "Calculate the allowable volume entry" so that the pump specifies the volume range internally. Do not enter the volume exceeding possible min/max level. • 1 (▲)	mL	×10000
42332	CAL actual volume -Lo							
42431	Data saving -Hi	2	Registers categolized with "S"	C	No	• Save the data (categorized with "S") in EEPROM up to a million. *Following data are saved only for the selected RANGE option. (Flow rate, speed and volume) *Send this request to a register address with odd number.		
42432	Data saving -Lo							

Register address	Item	Word	Data	Type	In operation	Description	Unit	Scaling
42461	Command execution -Hi	2	1-20	C	See the right column.	Execute the following command. 1: Turn on standby mode. In BATCH mode, pump waits to trigger the BATCH operation. In any other modes, pump starts the operation. 2: Stop operation. The pump gets back to the WAIT mode. 3: Change the MAN flow rate. Available in MAN operation. 4: Trigger BATCH operation. *Available when the pump waits in the BATCH mode. 5: Update the CAL result. Save a CAL adjusted parameter* up to a million automatically while the pump is stopped. 6: Clear all data. *Available while the pump is stopped. The pump automatically reboots*. 7: Reboot* the pump. *Electrical noise is generated on the cables. If controlling other devices with this pump, execute this command again. 8: Clear errors. 9: Apply the STOP signal and stop the pump. If "STOP signal (42241)" register is requested together, a last command will be proceedeed. 11: Release the STOP signal and run the pump. If "STOP signal (42241)" register is requested together, a last command will be proceedeed. 12: Reset the wear parts time. 13: Reset the run time. 14: Reset the total capacity. 15: Reset the run time 1. 16: Reset the run time 2. 17: Reset the run time 3. 18: Reset error logs. (total operation time at error and error code) 19: Calculate the allowable volume entry (as a CAL result). Available while the pump is stopped. The max/min allowable volume is stored in 31701/31703 registers. 20: Turn off linear actuators*. *When receiving the "Command execution" in error, the pump sends the exception response.		
42462	Command execution -Lo							

Register address	Item	Word	Data	Type	In operation	Description	Unit	Scaling
42999-43999	Broadcast unit identifier address -Hi Broadcast unit identifier address -Lo	2	1-20	C	See page 50.	• Configure the Broadcast address with odd number in your pump to execute a command to pumps. • Pumps with a same broadcast address behave as the executed command. Do not use the preassigned register address for the broadcast address. Pumps does not respond to a broadcast message. Read pump status with the 31201/31202 registers to know whether the broadcast is successfully proceeded or not. • 42999(▲)		
44001	Extra data saving _0 -Hi	2	0x00000000 - 0xFFFFFFFF	S	No	• Save customized data in extra area_0 (4 bytes). *Example: To indentify this pump from others.		
44002	Extra data saving _0 -Lo							
44003	Extra data saving _1 -Hi	2	0x00000000 - 0xFFFFFFFF	S	No	• Save customized data in extra area_1 (4 bytes). *Example: To indentify this pump from others.		
44004	Extra data saving _1 -Lo							
44005	Extra data saving _2 -Hi	2	0x00000000 - 0xFFFFFFFF	S	No	• Save customized data in extra area_2 (4 bytes). *Example: To indentify this pump from others.		
44006	Extra data saving _2 -Lo							
44007	Extra data saving _3 -Hi	2	0x00000000 - 0xFFFFFFFF	S	No	• Save customized data in extra area_3 (4 bytes). *Example: To indentify this pump from others.		
44008	Extra data saving _3 -Lo							

*Registers categorized with "S" save and keep those data in EEPROM even if the pump powers off.
*Registers categorized with "C" control the pump operation by executing a command.
*When executing a command to "Update the CAL result" or "Turn on standby mode" in the TUNE mode, the CAL/TUNE adjusted parameter are saved automatically up to a million.
*Data marked with "No" is written when the pump is stopped.
*Data marked with ▲ is a default value.
*Access each register within the specified data range.
*Every time changing the RANGE option, all of the flow rate, speed, volume and CAL adjusted parameter change together automatically. Calibrate the pump again according to your application.
*While configuring the COM mode setting from the Fn key, the pump does not receive a message from a master device; instead, it sends an exception response. The master should send a request only when the pump is in operation or stopped.
*The STD mode does not allow Modbus communication. Use the COM mode.
*Log is generated every minute. Data less than one minute is cleared.
*CAL speed and CAL actual volume generate the CAL adjusted parameter which is saved internally. The adjusted parameter changes with each RANGE option.
*When the pump reboots or turns off its linear actuators, both diaphragms and linear actuators return to the top dead centre. At this time, a small amount of liquid (Max 1.5 mL) is pushed out to your system if the pump and tubing are filled with liquid.
*After receiving a response from the pump, a master should make at least 50 ms interval to send a next request to the pump so that the pump runs according to the EMC directive.

Operation mode

After performing the wiring to the TB-C terminal (see page 24 and 25), select the COM mode.

Mode	Description
STD	Standard operation mode
COM	Communication mode over the RS-485

■ Select the STD mode

1 In the WAIT mode with the white LED bar, push the Fn key and select the oP-Md (OP-MD).
Push the ENT/SET key.

2 Select the Std (STD).
Push the ENT/SET key.

3 "oK" appears on the display. Push the ENT/SET key to confirm the setting.

* The ESC key goes back to the previous setting menu.

■ Select the COM mode

1 In the WAIT mode with the white LED bar, push the Fn key and select the oP-Md (OP-MD).
Push the ENT/SET key.

2 Select the CoM (COM).
Push the ENT/SET key.

3 "oK" appears on the display. Push the ENT/SET key to confirm the setting.
The pump is remotely controlled with the "COM" display and a blue LED light.

* The ESC key goes back to the previous setting menu.

■ Turn off the pump in COM mode

Execute the command so that the pump reboots or turns off the linear actuators first, and then disconnect the AC power plug from the power outlet.

■ Troubleshooting (communication failure)

A pump (slave) continues the current behaviour as follows if a master device fails to communicate with the slave. When the pump is in the:

- MAN-run mode: The pump continues the operation.
- BATCH-run mode: The pump stops after it meets the BATCH volume.
- MAN-run mode with the STOP signal from an external switch: The pump stops operation.
- BATCH-wait mode with the BATCH signal from the an external switch: The pump operates for the BATCH volume.

Program a secure system, for example, to apply the STOP signal into the pump automatically once a damaged cable prevents the pump from communicating with a master device.

Pressing and holding the Power key help to stop the pump even in the state of emergency.

*The pump always receives the STOP/BATCH signal and outputs the ERROR message over the TB-A terminal.

COM mode setting

Push the Fn key in the COM mode and set parameters.

*After confirming the setting, the pump automatically reboots. Both diaphragms and linear actuators return to the top dead centre. At this point, a small amount of liquid (less than 1.5 mL) is also pushed out. Take this into consideration if this small amount of excess could be a problem.

Parameter	Default	Description
OP-MD	STD	Select the operation mode from the STD or COM mode.
SID	1	Change a slave ID (slave address) in the range of 1-247.
TERM	TMOFF	Turn on/off the 120 Ω termination resistor.
BAUD	B192	Select a baud rate from 19200 bps (B192) or 38400 bps (B384).
BCAST	42999	Configure a broadcast unit identifier address in the range of 42999-43999.

Operation programming

Setting overview

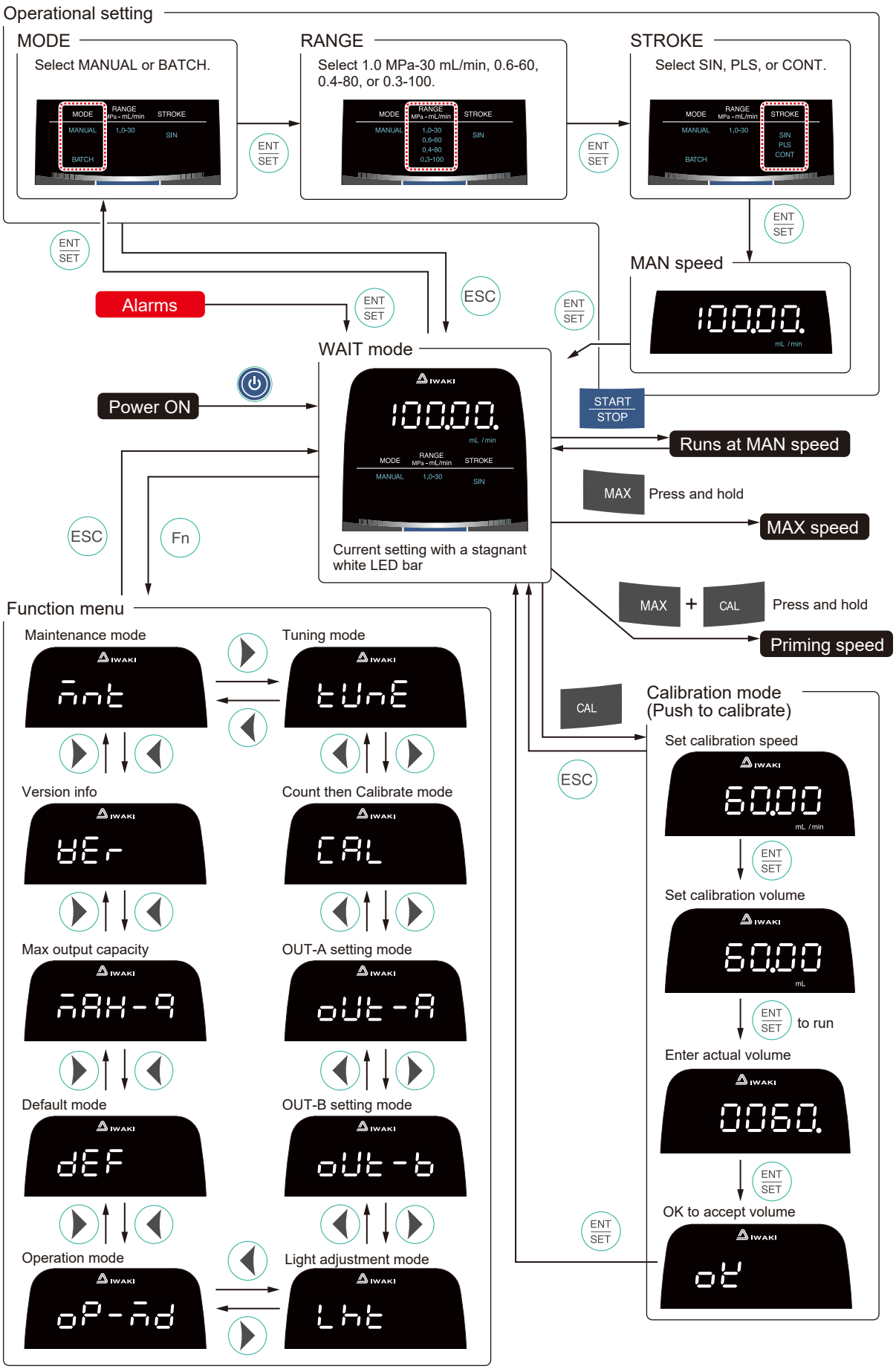

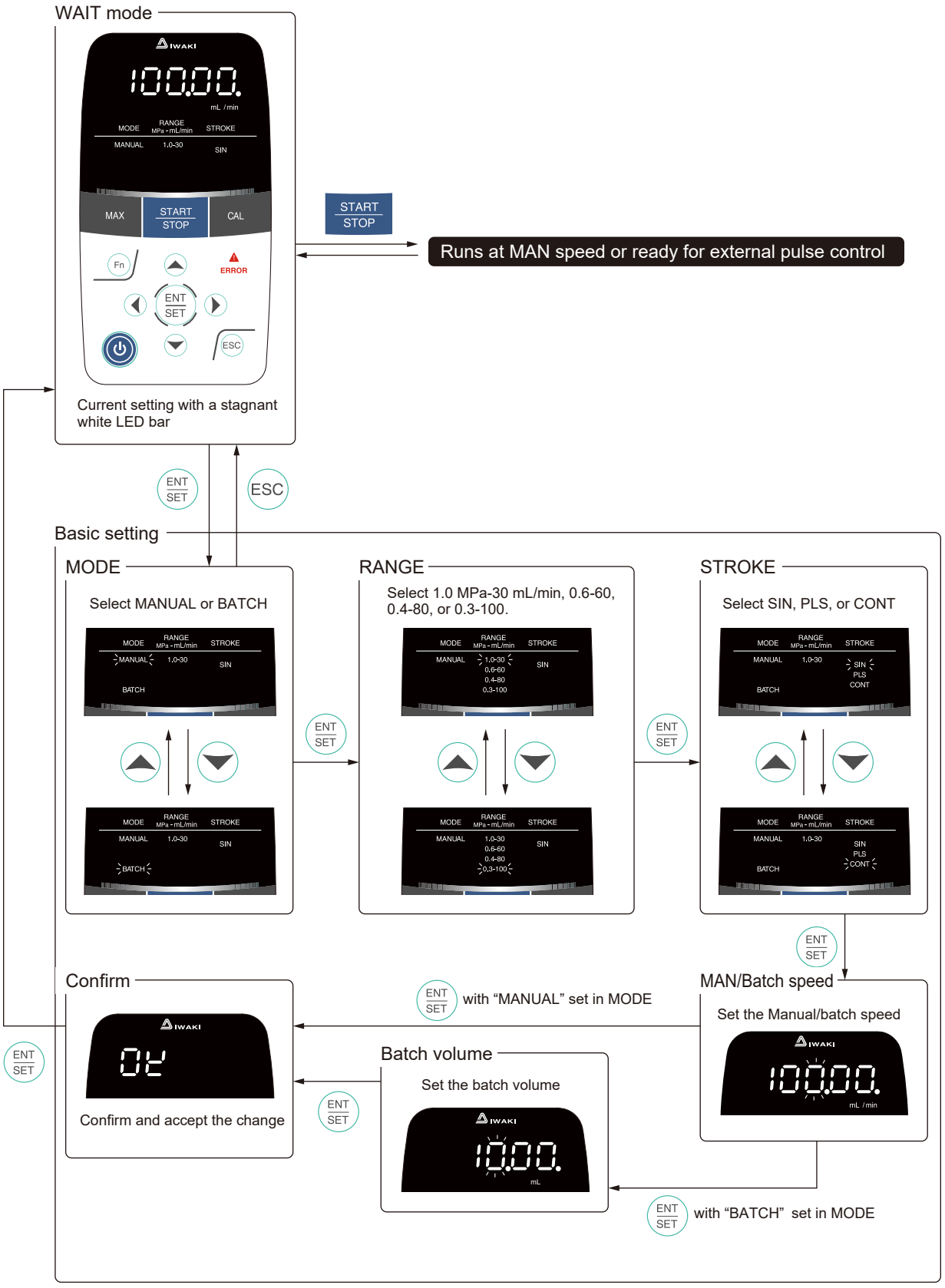

*The ESC key goes back to the MODE setting step.

Function menus

■ Standard mode

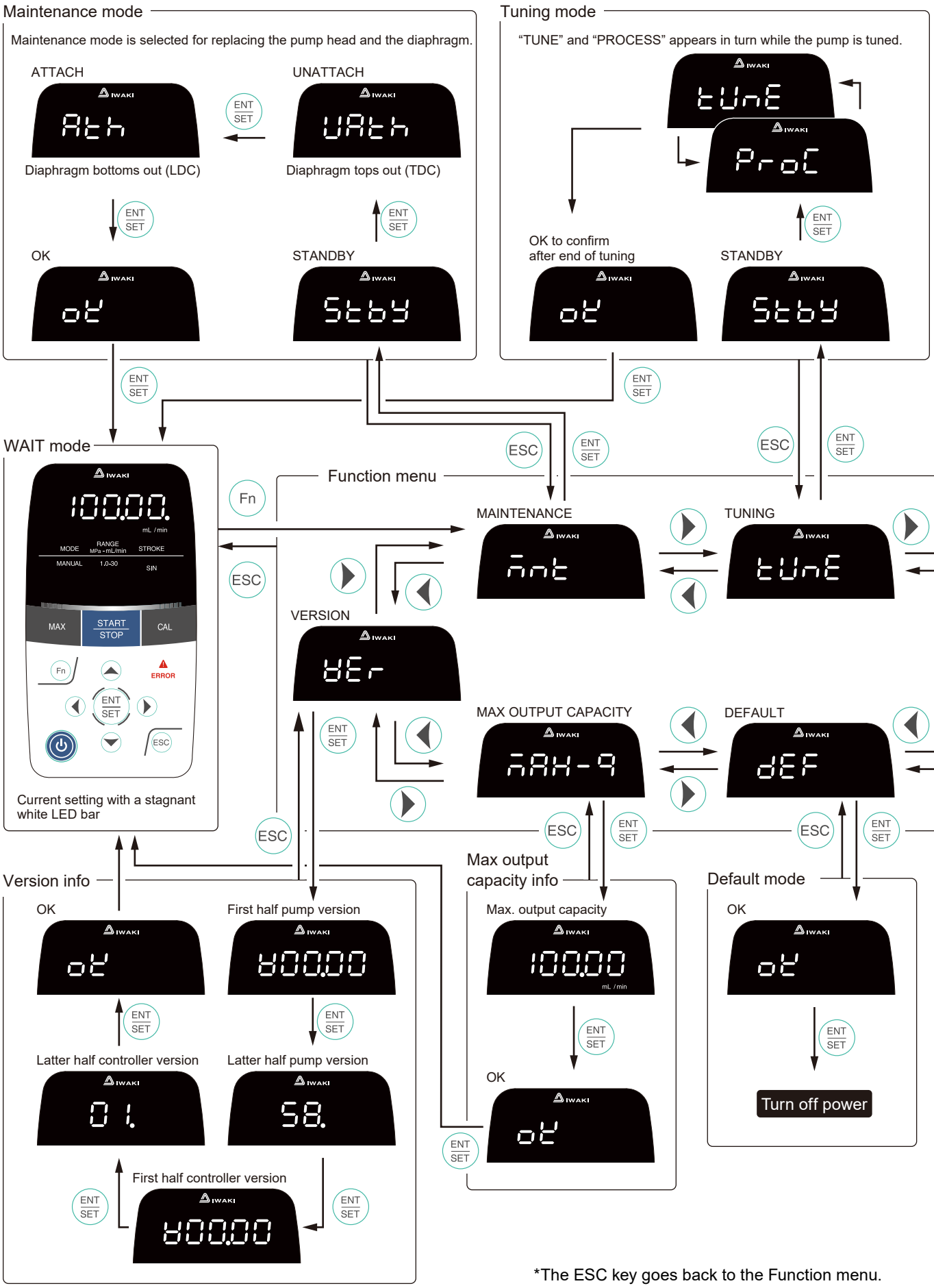

*The ESC key goes back to the Function menu.

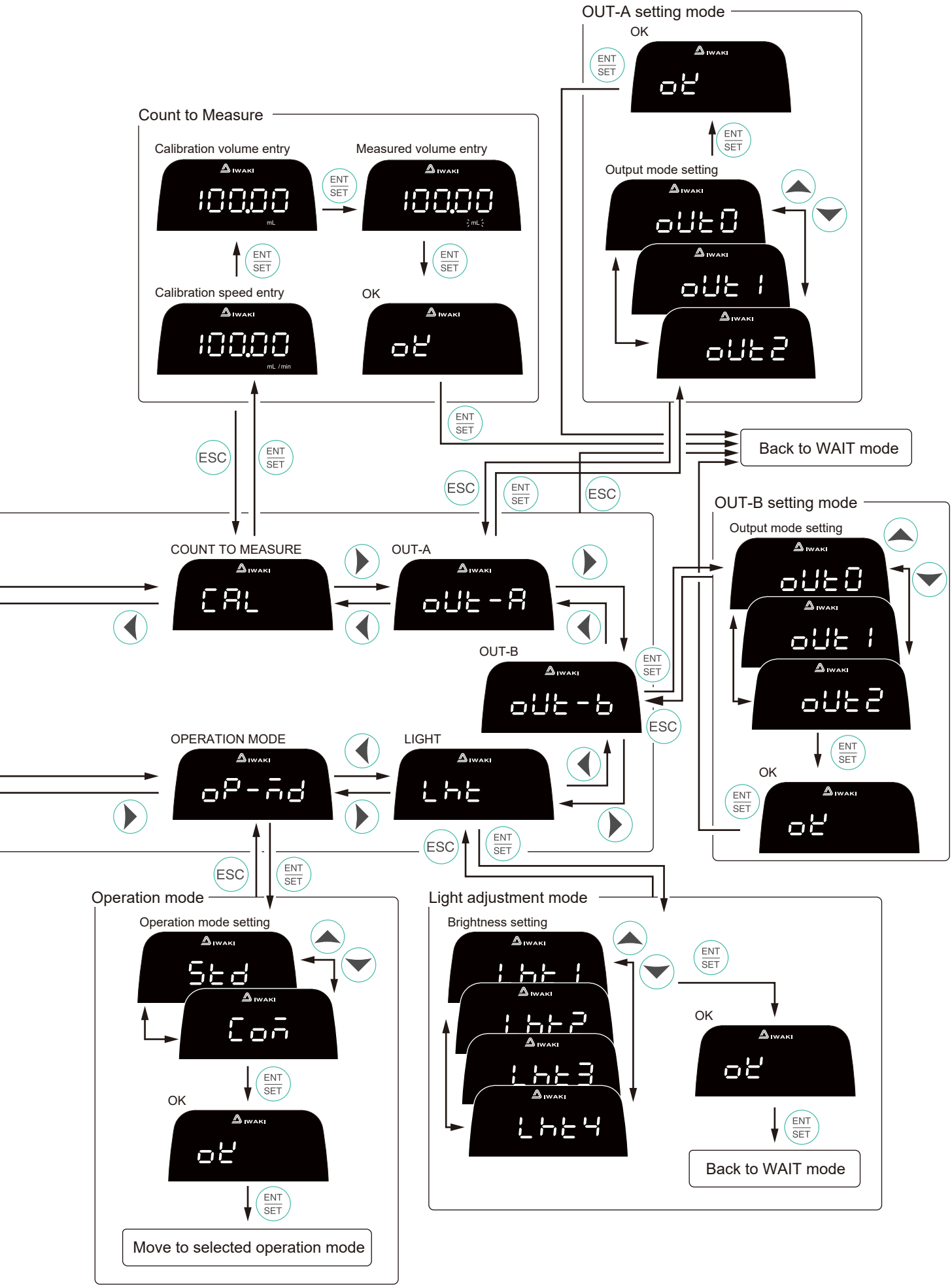
OUT-A setting mode
OK
ENT SET
Output mode setting
Count to Measure
Calibration volume entry
Measured volume entry
Calibration speed entry
OK
ESC
Back to WAIT mode
OUT-B setting mode
COUNT TO MEASURE
OUT-A
OUT-B
OPERATION MODE
LIGHT
Operation mode
Operation mode setting
Light adjustment mode
Brightness setting
Move to selected operation mode

Operation

■ Communication mode

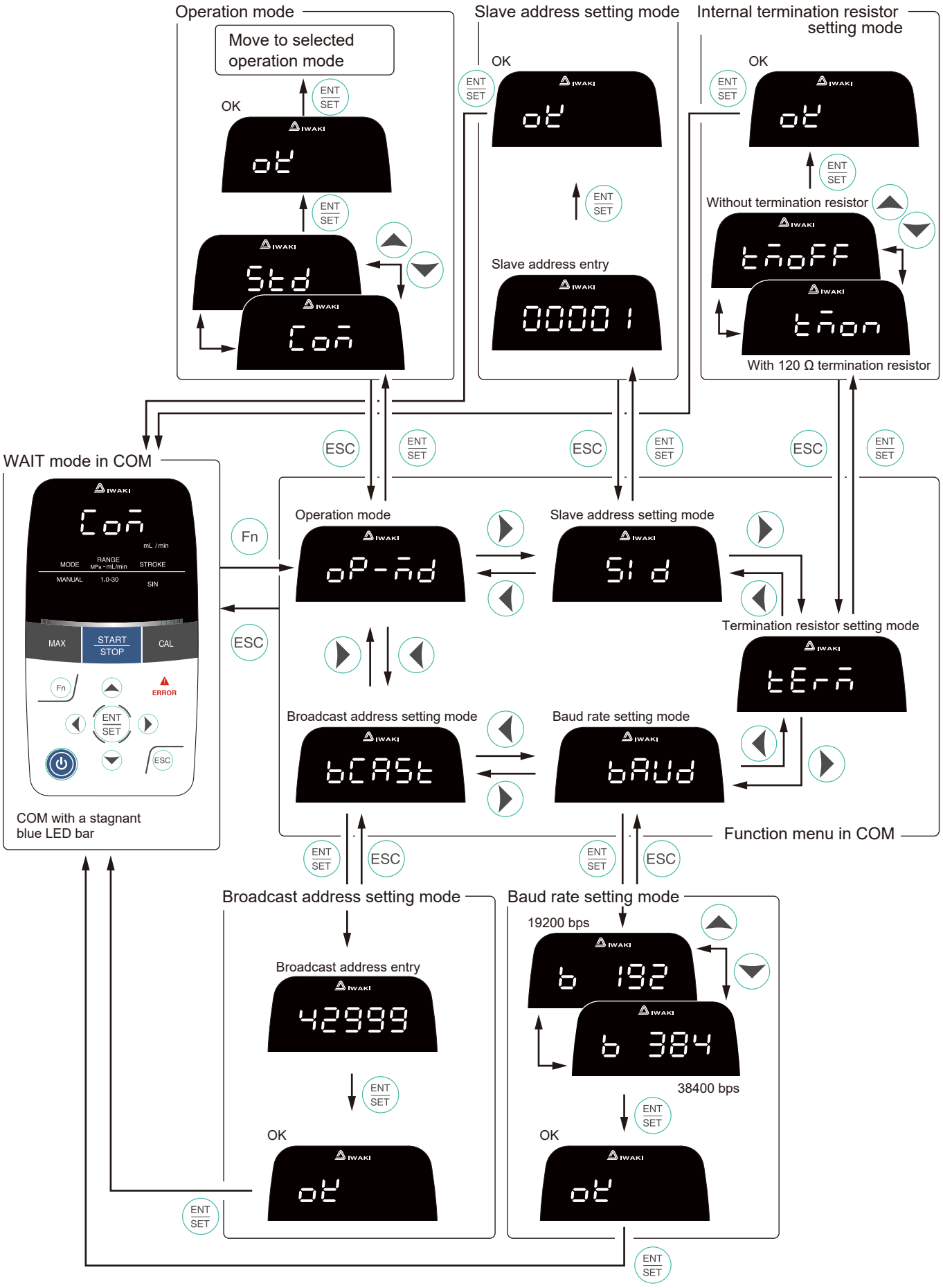

*The ESC key goes back to the Function menu. The Fn key is unavailable when the pump runs in the COM mode.

Maintenance

This section describes troubleshooting, maintenance, wear part replacement, exploded views and specifications.

Troubleshooting

Handling of the pump, maintenance and inspection should be carried out within this instruction manual. Do not go beyond the descriptions in this manual. It is not the manufacturer's responsibility for personal injury or property damage resulting from unauthorized service. Contact us or your nearest distributor as necessary.

■ Pump

Problems	Possible Causes	Corrective Actions
Liquid can not be pumped up.	Pump is gas locked*	• Expel air. See page 29.
	Air ingress through a suction line	• Check for the ingression point and fix/ reroute the suction line as necessary.
	Foreign matter is stuck in the valve module.	• Take apart, inspect and clean the valve module. Replace as necessary.
Pump output fluctuates. (Low repeatability)	Air trapped in the pump	• Expel air. See page 29. • Use deaerated water only.
	Foreign matter is stuck in the valve module.	• Take apart, inspect and clean the valve module. Replace as necessary.
	Diaphragm is broken.	• Replace the diaphragm. See page 70.
	Pressure fluctuates at an injection point.	• Make sure the pump and plumbing are filled with liquid. See page 29. • Maintain the pressure constant by optimising tubing or by relocating the injection point. • Calibrate the pump. See page 34.
	Linear actuators behave unstably.	• Tune the linear actuators. See page 62.
	Union nut is not secured tightly.	• Tighten as necessary. See page 28.
	Loose pump-head fixing-bolts	• Tighten as necessary. See page 28.
Liquid leaks.	Union nut is not secured tightly.	• Tighten as necessary. See page 28.
	Loose pump-head fixing-bolts	• Tighten as necessary. See page 28.
	Diaphragm is broken.	• Replace the diaphragm. See page 70.
The pump does not run. (The LED does not light or the screen is blank.)	The pump is not powered.	• Correct wiring. • Replace a broken wire with a new one.

Problems	Possible Causes	Corrective Actions
In the calibration process, actual liquid volume is less than two-thirds of the calibration volume.	Pressure fluctuates at an injection point.	• Make sure the pump and plumbing are filled with liquid. See page 29. • Maintain the pressure constant by optimising tubing or by relocating the injection point.
	Union nut is not secured tightly.	• Tighten as necessary. See page 28.
	Foreign matter is stuck in the valve module.	• Take apart, inspect and clean the valve module. Replace as necessary.
The Modbus connection is not established.	Wrong setting on the pump	• Select the COM operation mode. See page 52. • Make sure configured parameters match between a master device and pumps as shown on page 53.
	Wrong setting on a master device	• Conform to the communication standard and communication protocol on page 43. • When using a PC as a master device, make sure the appropriate COM port and driver are selected on the PC setting.
	Wrong wiring	• Correct wiring.
An exception response is returned.	The pump is configured on the function menu.	• Back to the WAIT mode.
Error blinks on the pump while the COM mode setting is configured.	The pump is configured on the function menu in the error state.	• Back to the WAIT mode and clear the error from the master device. • Back to the WAIT mode and turn off power.

Glossary

Gas lock is where the pump takes in too many air in it or plumbing which totally prevents a chemical liquid from being transferred as entrained air contracts/expands depending on pressure.

Error messages

Take measures depending on each possible cause. When any error codes other than the below appear, contact us or your nearest distributor with the error code you see on the pump display. Remove the AC adapter from the power outlet afterward.

Error codes	Possible Causes	Corrective Actions
ERROR 1 	Pressure overload protection is active. The pump stops running if a certain period of time has passed exceeding the max pressure. (in this state the pump is locked)	• Check for abnormal pressure and take a corrective action. • Check a discharge line for clogging and remove it as necessary. • Check that the diaphragms are securely attached to the linear actuators. See page 70. • Release the pressure from the pump/discharge line and push the ENT/SET key to unlock the pump.
ERROR 2 	Power voltage is too high or too low to run the pump. (The pump is locked if the supply voltage falls below 20 VDC or exceeds 28 VDC.)	• Use the provided AC adapter. • Consult the manual of the AC adapter. • Supply the rated voltage and push the ENT/SET key to unlock the pump.
ERROR 5 	Ambient temperature is too high. (in this state the pump is locked)	• Reduce the temperature and push the ENT/SET key to unlock the pump.
ERROR 8 	Pump output exceeds the max capacity. (in this state the pump is locked)	• Check for the ingression point and fix/reroute the suction line. Expel air as shown on page 29 and then calibrate the pump. See page 34. Push the ENT/SET key to unlock the pump.
ERROR 21 	Pump output is unsteady. (in this state the pump is locked)	• Release the pressure from the pump. Remove the root cause of pressure fluctuation of your system. Push the ENT/SET key to unlock and then tune the pump.

*When the pump causes an error, both diaphragms and linear actuators return to the top dead centre and then pump stops. At this point, a small amount of liquid (less than 1.5 mL) is also pushed out. Take this into consideration if this small amount of excess could be a problem.

Tuning

Tune the pump and the linear actuators every time the diaphragms and the valve modules are replaced or when the "ERROR 21" appears on the display.

When the diaphragms and the valve modules are replaced, securely attach the pump head A and the union nut. Tune the pump at zero pressure before returning it into your tubing system.
When the ERROR 21 happens and you need tuning with the pump in your tubing system, just release your system pressure to zero.

1 In the WAIT mode with the white LED bar, push the Fn key and select the tUnE (TUNE) option
The "Stby" shows up.

2 Push the ENT/SET key and starts tuning
Takes a few tens of seconds to finish tuning and the "OK" appears.

3 Push the ENT/SET key to return to the WAIT mode

Initialization

Initialization returns all the user settings such as operating parameters to the uncalibrated factory default setting with:

- "MANUAL" to the MODE,
- "0.3 MPa to 100 mL/min" to the RANGE,
- "SIN" to the STROKE, and
- "100 mL/min" to the pump speed.

*Parameters in the COM mode are not initialized.

1 In the WAIT mode with the white LED bar, push the Fn key and select the dEF (DEFAULT) option
The "OK" shows up.

2 Push the ENT/SET key
The pump shuts down itself.

3 Push the  key to reboot the pump

4 Tune the pump
See the above section for tuning.

Inspection

Perform daily inspection to keep the best pump performance and safety.

Daily inspection

Check the following points. If you notice any abnormal or dangerous conditions, suspend operation immediately and inspect/solve problems. See the "Troubleshooting" section as necessary.
When wear parts come to the life limit, replace them with new ones. Contact your distributor for detail.

No.	States	Points to be checked	How to check
1	Pumping	• If liquid is pumped.	Flow meter, pressure gauge, or visual inspection
		• If discharge pressure is normal.	Pressure gauge
		• If liquid property is changed. • If the valve module has dried out with crystal deposition.	Visual or audio inspection
2	Noise and vibration	• If abnormal noise or vibration occurs. They are signs of abnormal operation.	Visual or audio inspection
3	Air ingress from the pump head joints and the suction line	• If pumped liquid includes air bubbles, check the line for leakage and loose connection, retighten, and expel air as necessary.	Visual or audio inspection
4	Abnormal heat	• If the surface temperature of the pump is too high.	By touch or thermometer

Wear part replacement

To run the pump for a long period, wear parts need to be replaced periodically.
It is recommended that wear parts are always stocked for immediate replacement. Contact your nearest distributor with the following information.

1. Part names and part number (see below.)
2. Pump model identification code and manufacturing number (see the pump nameplate.)

Points to be observed

- Follow instructions in this manual for replacement of wear parts. Do not disassemble the pump beyond the extent of the instructions.
- Always wear protective clothing such as an eye protection, chemical resistant gloves, a mask and a face shield during disassembly, assembly or maintenance work. The specific solution will dictate the degree of protection. Refer to SDS precautions from the solution supplier.
- Solution in the discharge line may be under pressure. Release the pressure from the discharge line before disconnecting plumbing or disassembly of the pump to avoid solution spray.
- Rinse wet ends thoroughly with pure water, acid or alkali, depending on your chemical solution, to neutralize the liquid pH to a safe level.
- Risk of electrical shock. Be sure to turn off power to stop the pump and related devices before service is performed.
- Observe the service lives of the wear parts; otherwise, performance degradation or the parts damage may result

Wear part list

Parts #	Part names	# of parts	Estimated life
1	Diaphragm	2	4000 hours or 1 year, whichever comes first
8	Valve module, SS unit	2 sets	4000 hours or 1 year, whichever comes first
	Valve module, RS unit	2 sets	4000 hours or 1 year, whichever comes first
9	Module gasket	2	4000 hours or every time the valve module is cleaned/ replaced
12	Union nut seat	1	4000 hours or 1 year, whichever comes first

*4,000 hours are the total operating time.
*Do not use the parts which has expired.

Before replacement

Take steps below before taking apart the pump.

■ Flushing

1 Stop the pump

2 Remove the pressure, a chemical liquid, and the pump from tubing

If the pump is in a suction lift system in general, open the drain valve first to depressurize the pump and tubing. And then close the discharge valve and then suction valve.

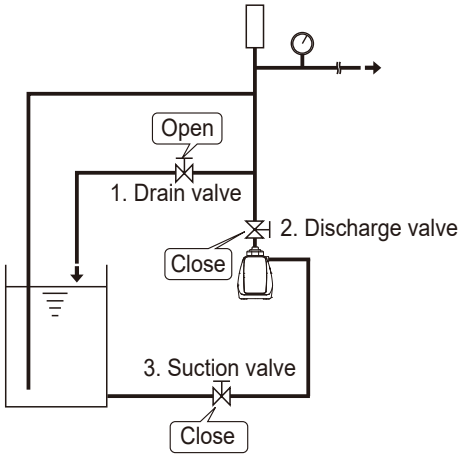

If the pump is in a flooded suction system in general, close the suction valve first and then open the drain valve to depressurize the pump and tubing. Then close the discharge valve.

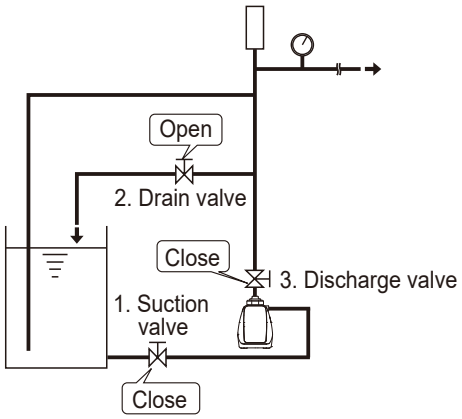

3 Establish a flushing system and clean the pump with the neutralized water or pure water

At the end of cleaning, take the end of suction line out of neutralized/pure water to empty the pump.

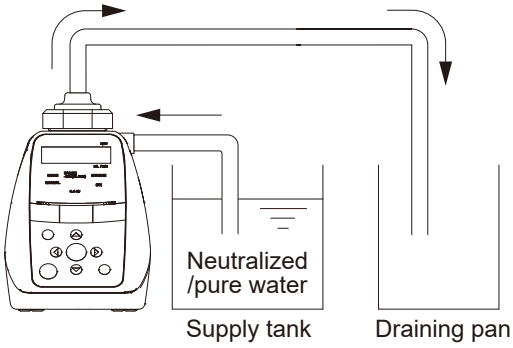

4 Stop the cleaning and leave the pump in the WAIT mode with the white LED bar

Wear parts

Be careful not to get wet with residual chemicals in the pump chamber or the discharge tubing.

■ Disassembly

1 Use the provided adjustable wrench to loosen the union nut and detach the pump head B and the union nut seat

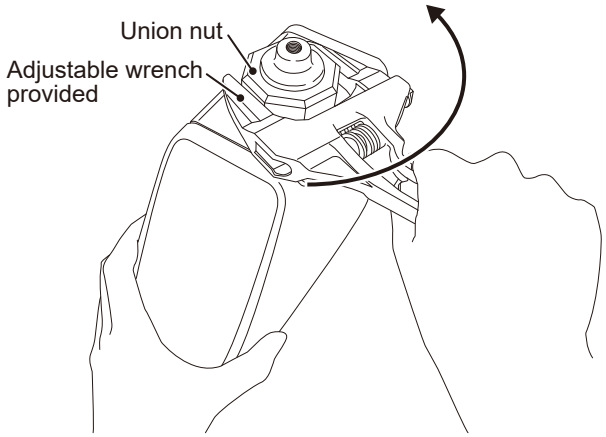

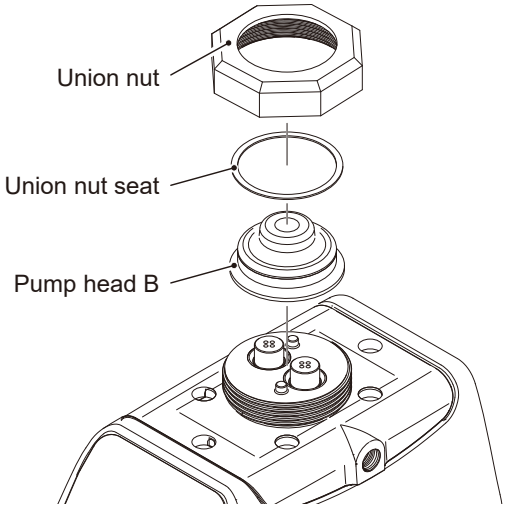

2 Take out the module gasket and the valve module

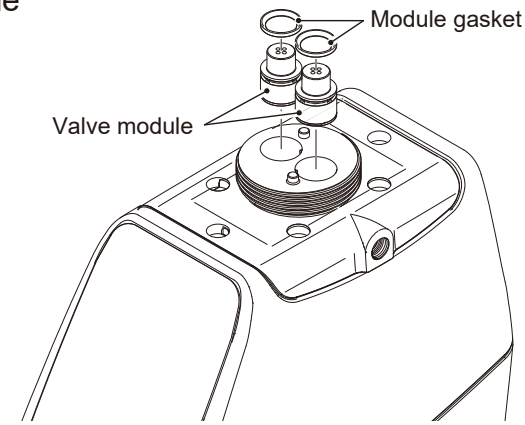

3 Remove the rubber bush, the M3 hex socket head cap screws and then the pump head A

Use the provided hex wrench to loosen the M3 hex socket head cap screws.

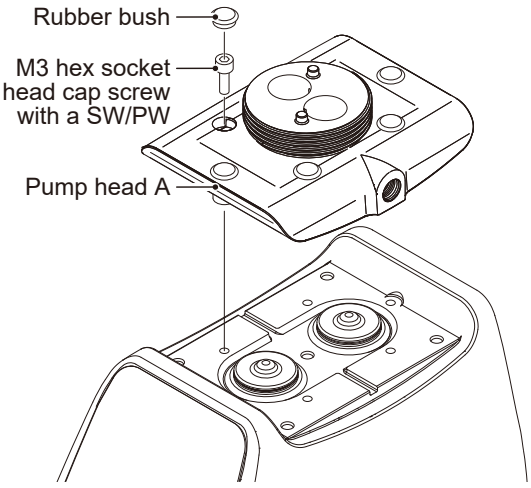

4 Push the Fn key

5 Use the right and left keys to select the "Mnt" (Maintenance)

6 Push the ENT/SET key to get ready with the Stby (Standby)

7 Push the ENT/SET key and move the linear actuators to top dead centre (TDC)

The display shows the UAth (Unattach) status code.

8 Turn the diaphragm counter clockwise

The shim ring and the retainer are beneath the diaphragm. Try not to drop them. Incline the pump itself to one side and then take them out along with the diaphragm.

NOTE

The thickness/number of the front shim rings and the rear shim rings are different from each other. Always replace the front shim rings to the front diaphragm and the rear shim rings to the rear diaphragm.

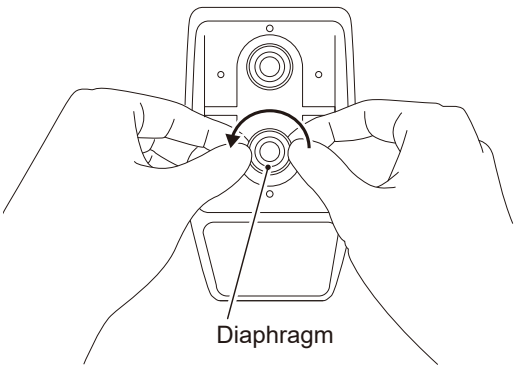

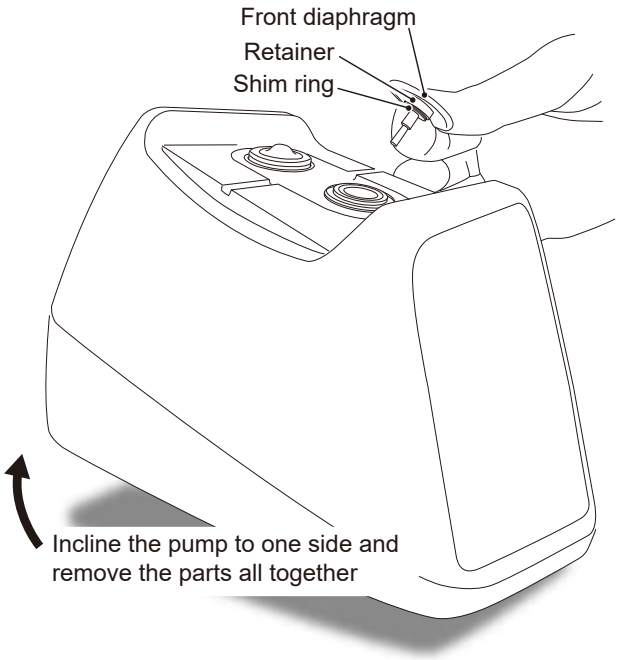

■ Cleaning valve module

1 Select a cleaning water depending on how much the valve modules are fouled and put it into a beaker

For light fouling, use a light cleaner, for example, diluted neutral detergent by pure water.

For heavy fouling, use a strong cleaner, for example, a solvent such as benzine and thinner.

2 Immerse the valve modules into the cleaning water

Place the valve modules upside down so that the inside of the valve module can be cleaned effectively.

3 Place the beaker into the ultrasonic washing machine and start cleaning

Remove a washing agent before putting the valve modules back to the pump.

*If these parts are kept separately for a long time, expose them to the air in the shade to dry off completely. Also, always leave these parts upside down or on their sides.

NOTE

Do NOT take apart the valve module or it may break.

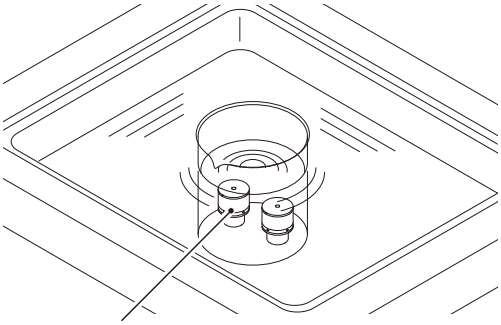

Put the valve modules upside down

*If purchasing optional valve modules:
After cleaning them with the ultrasonic washing machine, you need to remove washing agent from the modules. Immerse modules into ethanol or stick a nozzle of a wash bottle in the module holes to pour ethanol into them. Dry off completely and store them in the provided case.

NOTE

When pouring ethanol into the modules, wear protective clothing such as an eye protection and chemical resistant gloves.

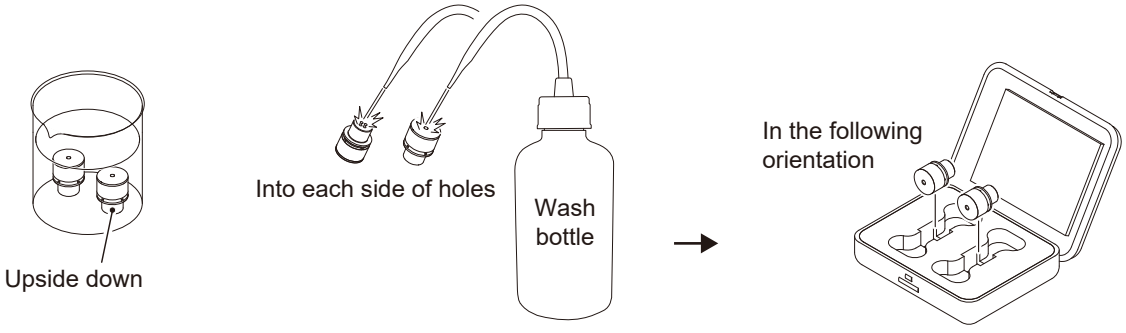

Immerse modules into ethanol. **Pour ethanol into modules.** **Store modules in the provided case.**

■ Cleaning pump head

1 Select a cleaning water depending on how much the pump head A and B are fouled and pour it into a beaker

For light fouling, use a light cleaner, for example, diluted neutral detergent by pure water.

For heavy fouling, use a strong cleaner, for example, a solvent such as benzine and thinner.

2 Immerse the pump head A and B into the cleaning water

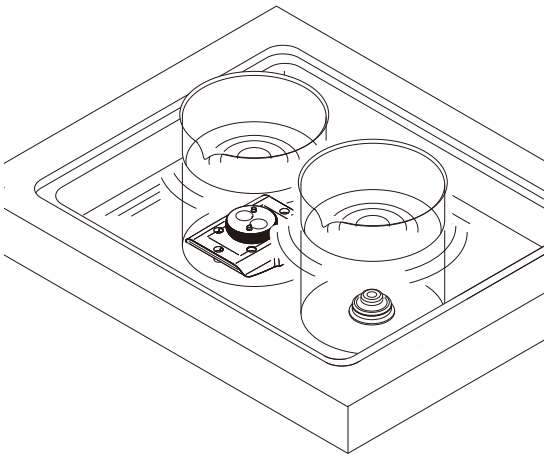

3 Place the beaker into the ultrasonic washing machine and start cleaning

Remove a washing agent before putting the pump head A and B back to the pump.

*If these parts are kept separately for a long time, expose them to the air in the shade to dry off completely.

■ Assembly

1 Make sure the pump is stopped with the white LED bar

2 Push the Fn key and select the MNT (Maintenance) option

3 Push the ENT/SET key to get ready with the Stby (Standby)

4 Push the ENT/SET key and move the linear actuators to top dead centre (TDC)

The display shows the UAth (Unattach) status code.

5 Install the retainer and then the shim ring to the diaphragm shaft

The retainer has the mounting direction. Always mount the concave side first to the shaft.

6 Turn the diaphragm clockwise

The shim ring and the retainer are beneath the diaphragm. Try not to drop them. Incline the pump itself to one side and then fasten the diaphragm together with the spacer and the retainer to finger-tight.

NOTE

- Do not use excessive force when tightening the diaphragm. Overtightening may damage the diaphragm.
- Do not bend or deform the diaphragm.
- The thickness/number of the front shim rings and the rear shim rings are different from each other. Always replace the front shim rings to the front diaphragm and the rear shim rings to the rear diaphragm.

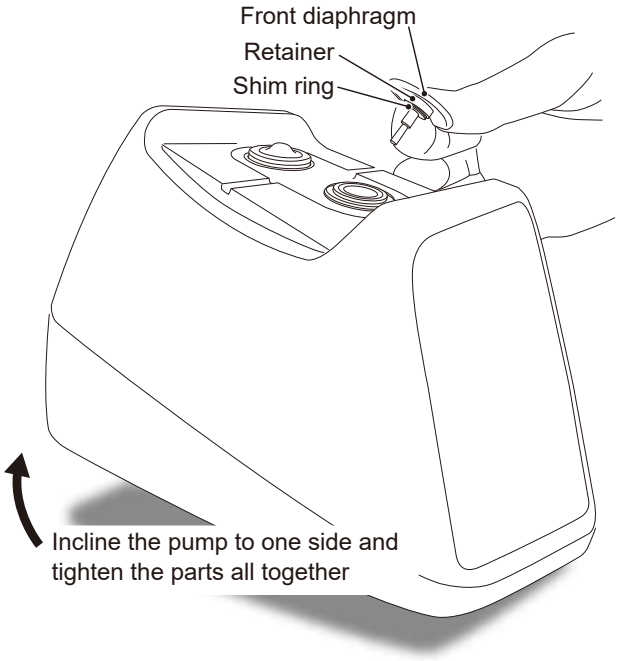

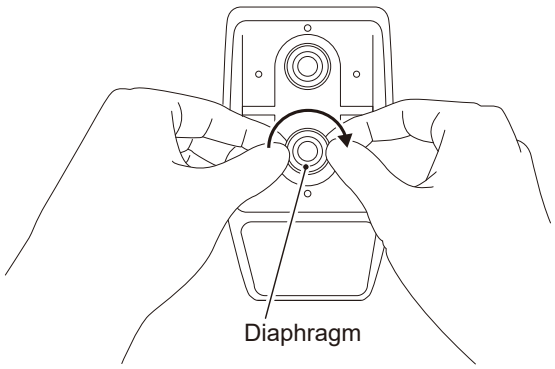

7 Push the ENT/SET key and pull down the linear actuators to bottom dead centre (BDC)

The display shows the Ath (Attach) status code.

8 Mount the pump head A that is cleaned with the M3 hex socket head cap screws and then the rubber bushes

Tighten the M3 hex socket head cap screws diagonally by 0.7 N·m.

Depending on how your system is established, you can turn around the pump head A thus the pump inlet to the left side so that you can easily take the pump into your plumbing.

NOTE

Make sure to pull down the linear actuators with the Ath status code. Or the pump head A won't be fixed in place and pump output loses its accuracy.

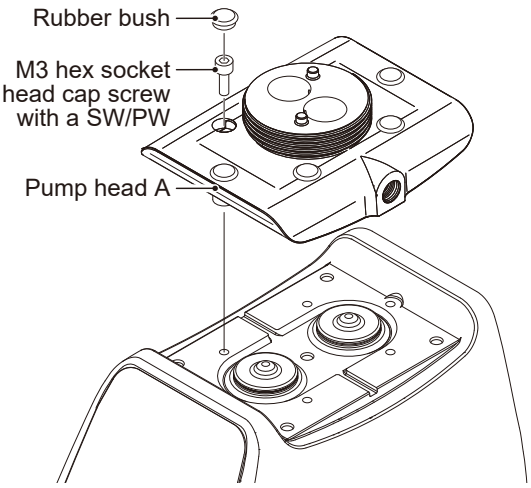

9 Replace the module gasket and the valve module

The module gasket may be floating. Push down and seat a floating module gasket in place. A floating or missing module gasket could adversely affect the pump output or lead to a chemical leak.

*The pump with the SS valve module is mainly used for the higher output capacity (CV=±0.5 % at 50 % or higher pump capacity), and that with the RS is used for the lower output capacity (CV=±3.0 % between the 0.01 to 0.1 mL/min range.).

*The CV (Coefficient of Variation) value is also called as repeatability.

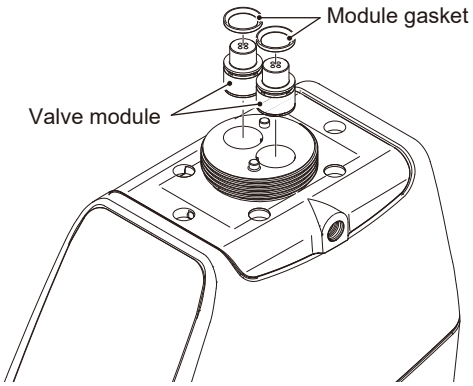

10 Remount the pump head B, the union nut seat, and hand-tighten the union nut

Make sure the valve module is accommodated in the pump head B in place.

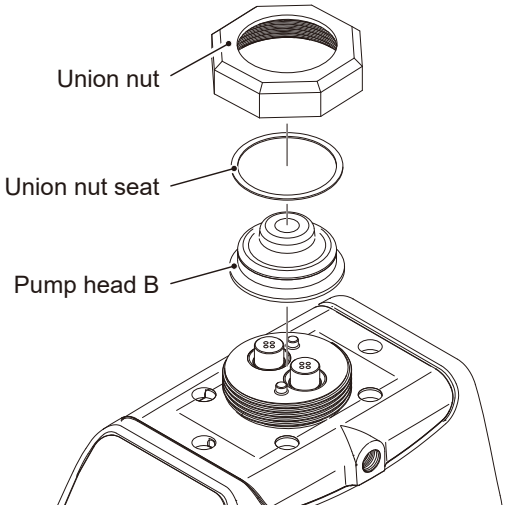

11 Use the provided adjustable wrench to further turn it for 30°

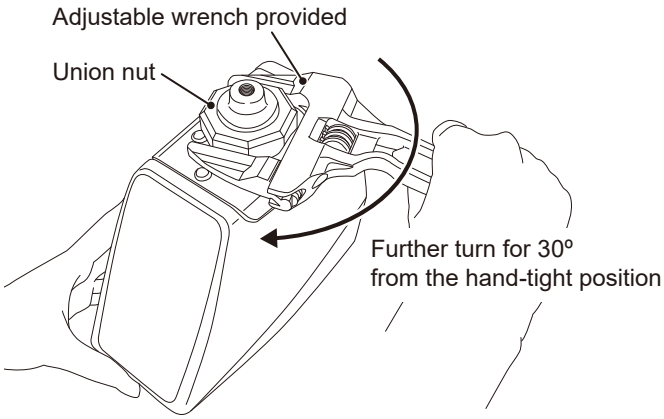

12 Push the ENT/SET key and close the Maintenance mode

The "OK" appears.

13 Push the ENT/SET key to return to the manual or batch operation mode

The pump stays stopped with the white LED bar.

14 Tune the pump

See the tuning section on page 62.

Exploded view

Pump

Do not take apart the pump beyond the extent shown in the diagram below.

No.	Part names	# of parts
1	Diaphragm	2
2	Retainer	2
3	Shim ring, 0.1 mm	*1
4	Shim ring, 0.3 mm	*1
5	Shim ring, 0.5 mm	*1
6	Pump head A	1
7	Hex socket head cap screw with SW/PW	6
8	SS valve module unit	2
	RS valve module unit*2	2
9	Module gasket	2
10	Pump head B	1
11	Union nut	1
12	Union nut seat	1
13	Rubber bush	6

*1 The number of the shim ring can change with individual pump.

*2 An LR-P pump is applied only for the RS valve module unit.

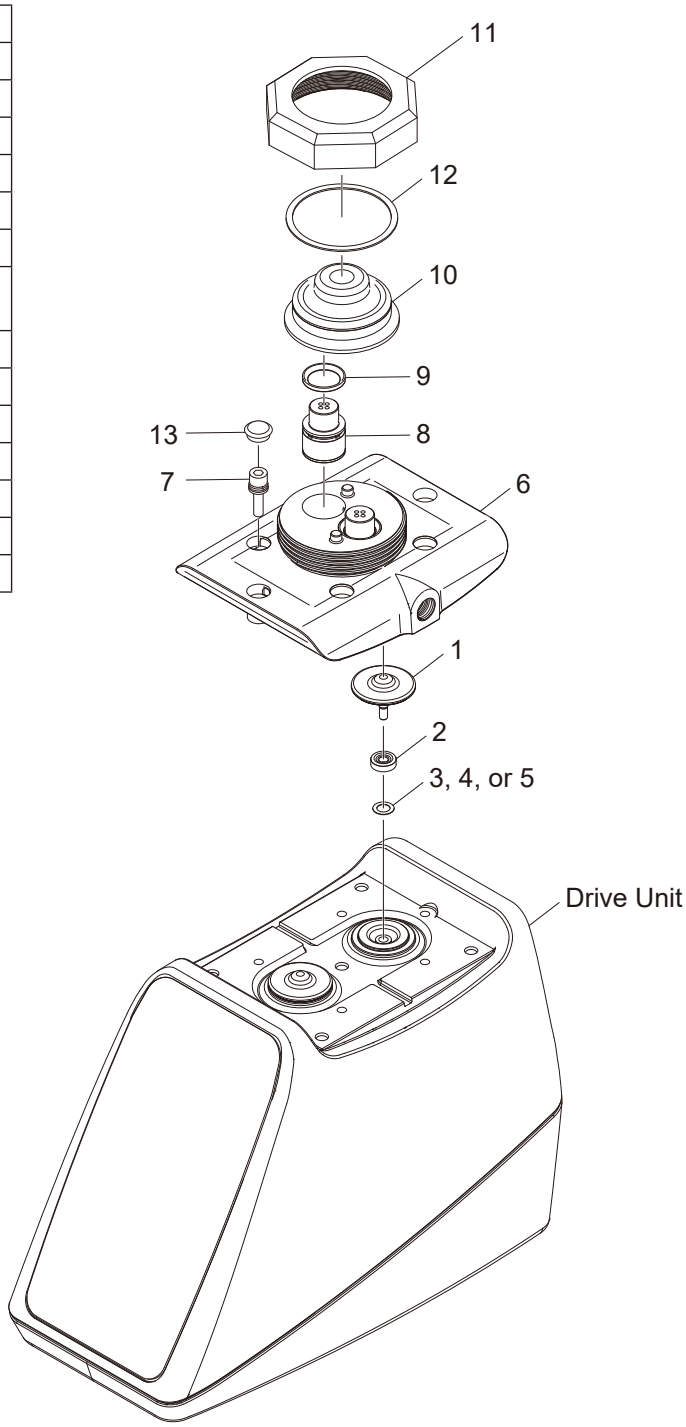

Specifications/Outer dimensions

Specifications

Information in this section is subject to change without notice.

■ Pump

Max flow	100 mL/min	80 mL/min	60 mL/min	30 mL/min
Output capacity	0.01 to 100 mL/min	0.01 to 80 mL/min	0.01 to 60 mL/min	0.01 to 30 mL/min
Max pressure	0.3 MPa	0.4 MPa	0.6 MPa	1.0 MPa
Stroke length	1.00 mm	0.80 mm	0.60 mm	0.40 mm
Liquid temperature	0 - 60 °C (non-condensing)			
Ambient temperature	0 - 40 °C			
Ambient humidity	35 - 80 %RH (non-condensing)			
Maximum altitude	2000m			
Pollution degree	2			
Pump inlet/outlet size	Rc⅛" female thread			
Power voltage	24 VDC			
Rated current	2.5 A			
Mass	2.7 kg (for the LR-S pump) 1.8 kg (for the LR-P pump)			
Noise level*	40 dBA (1m) with SIN/CONT STROKE options, or 45 dBA (1m) with PLS STROKE option			

*The above information is based on pumping deaerated pure water at rated voltage and ambient temperature.

*When you use the pump with the S valve modules and the pump output is set too low (below 1.00 mL/min), an actual pump output will reduce even to zero under a pressure.

*Noise level is based on using the LR-S pump with the SUS316 pump head. When the PEEK materials are used on the pump head, use the LR-P pump with the RS valve module unit, and keep the flow rate within 2-3% of the CV value so that the noise level does not exceed the above value.

*Use indoors only.

*This product is intended primarily for research, development, experimental, and control applications. Operate the product within the specified operating conditions.

■ CV (Coefficient of Variation) value at 25°C

The CV value is applied to SIN STROKE setting or CONT STROKE setting only. The PLS with high pulsation is exempted.

LR-SS

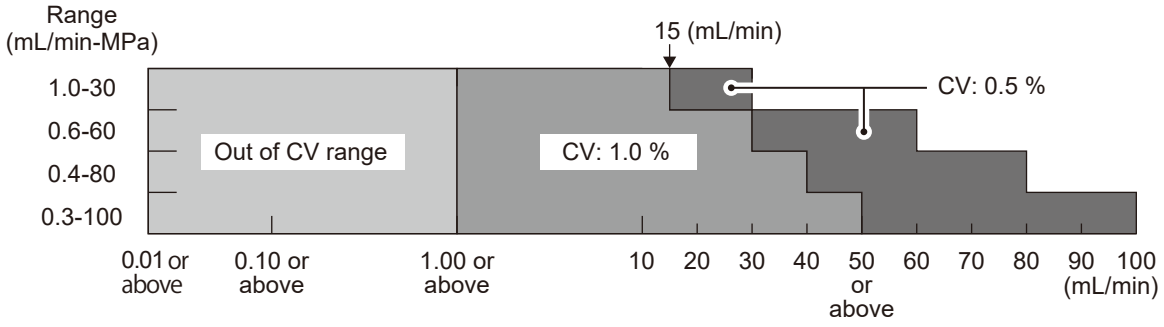

LR-RS

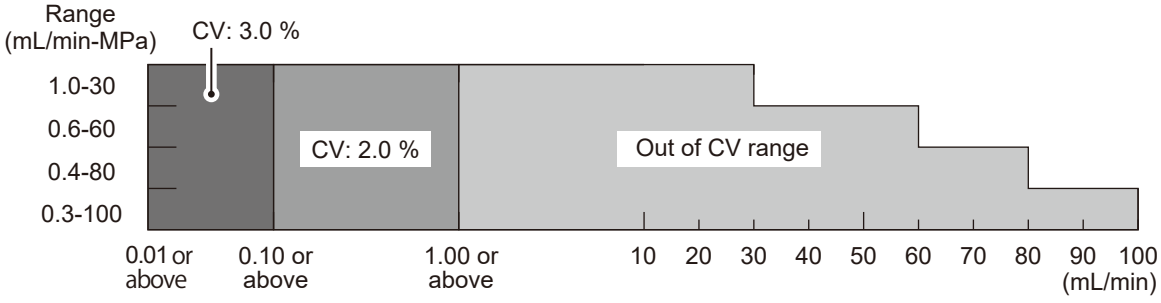

*The CV values on the graphs are based on operation at 25 °C room temperature and 23 °C liquid temperature with our test plumbing and deaerated pure water.
*You can set the desired output even if it falls upon the Out of CV range; however, with the SS valve module (LR-SS) and the pump output is set too low (below 1.00 mL/min), an actual pump output will reduce even to zero under a pressure.
*With the SS valve module (LR-SS) and the desired output set to 1.00 mL/min or above, liquid can flow faster if the back pressure is too low. Use the back pressure valve on the discharge line to give 0.05 MPa or higher to the pump.
*CONT STROKE setting best reduces the liquid pulsation but then SIN STROKE does pulse. And such a pulsation dosing can exceed the CV values of the graphs. Optimise your operating conditions: plumbing, pressure, and temperature, etc, so that the CV values are maintained.
*PLS STROKE setting accompanies clear pulsation and any CV values are not applicable to such a pulsation dosing.
*The maximum suction lift varies with the valve modules (LR-SS or LR-RS), the RANGE setting, and the STROKE setting. See page 20 and the suction lift table for detail.

■ Control

Operation mode	MODE	MANUAL	Cursor keys to adjust the MAN speed and run the pump.
		BATCH	Cursor keys to adjust the BATCH speed (0.01 - 100 mL/min) and the BATCH volume (0.01 - 999.99 mL). Use the ENT/SET key or a dry contact pulse signal to run the pump until the batch volume is met.
	RANGE	1.0 MPa to 30 mL/min	Max discharge pressure: 1.0 MPa Output capacity: 0.01-30.00 mL/min
		0.6 MPa to 60 mL/min	Max discharge pressure: 0.6 MPa Output capacity: 0.01-60.00 mL/min
		0.4 MPa to 80 mL/min	Max discharge pressure: 0.4 MPa Output capacity: 0.01-80.00 mL/min
		0.3 MPa to 100 mL/min	Max discharge pressure: 0.3 MPa Output capacity: 0.01-100.00 mL/min
	STROKE	SIN	Low noise and low pulsation
		PLS	Legacy solenoid pump pulsation
		CONT	Continuous steady flow with minimum pulsation
	MAX speed of each range		While the MAX key is pressed, the pump runs at the maximum speed of each range selected.
	Priming speed		While both the MAX key and the CAL key are pressed, the pump runs at the maximum speed to expel air from the pump and tubing.
Calibration	Push to Calibrate		As the CAL key is pushed, the pump starts countdown to finish the calibration volume. Then enter the measured output to calibrate the pump.
Functions	Count then Calibrate		Calculate the measuring time in advance and then run the pump for that time to correct the actual pump output. Then enter the measured volume to calibrate the pump.
	Maintenance		Hold the linear actuators to Top Dead Centre or Bottom Dead Centre for the diaphragm replacement.
	Tuning		Tune the linear actuators for accurate dosing.
Protections	ERROR 1 (overpressure/overcurrent)		If the linear actuators consume an electric current exceeding the possible maximum level, the pump stops.
	ERROR 2 (power voltage)		If the DC power supplied from the AC adapter is at 28 VDC or higher or 20 VDC or lower, the pump stops. (the rated DC power voltage: 24 VDC)
	ERROR 5 (temperature)		If the pump temperature rises too high, the pump stops.
	Error 8 (high output)		If the pump output exceeds the possible maximum level, the pump stops.
	Error 21 (unsteady output)		If the pump output fluctuates greatly due to the linear actuators that are out of control, the pump stops.

*The selection of MODE, RANGE, and STROKE is determined as a sequence when the ENT/SET key is pushed in the WAIT mode.
*When the PLS option is set to the STROKE and the desired output is lower than 1.00 mL/min, the interval between pump strokes can be one minute or longer which is too long and is not advisable.

■ Input/Output

Input		
STOP signal	Use an external switch or solid state device that supports/switches 12 VDC at 10 mA from the pump to stop the operation of the pump.	
Electrical spec	NPN open collector	Maximum applied voltage: 12 VDC
		Rated output current: 10 mADC
Pulse signal	Use an external switch or solid state device that supports/switches 12 VDC at 10 mA from the pump to trigger the BATCH operation.	
Electrical spec	NPN open collector	Maximum applied voltage: 12 VDC
		Rated output current: 10 mADC
Output		
Alarm signal	The NPN open collector supports/switches 25 VDC at 10 mA signal from an external device right when the pump is in any of the error conditions.	
Electrical spec	NPN open collector	25 VDC 10 mA
Batch completion	The NPN open collector supports/switches 25 VDC at 10 mA signal from an external device right when the BATCH volume is met.	
Electrical spec	NPN open collector	25 VDC 10 mA
Output mode setting		
Output terminal	Select one of any outputs to OUT-A and OUT-B corresponding to your application. OUT 0: No output OUT 1: Error event OUT 2: Batch finish	
Modbus	TB-C terminal: two-wire, RS-485	

*The maximum applied voltage from the LR to an external contact is 12 VDC at 10 mADC. When using a mechanical relay, its minimum application load should be 5 mA or below.

*The signal width of STOP/PULSE signal should be 60 ms or longer.

*After receiving a response from the pump in the Modbus COM mode, a control device should make at least 50 ms interval to send a next request to the pump so that the pump runs according to the EMC directive.

■ Display

Display	Alphanumeric, 5-digit, 7-segment LED	
Status LED	Lights white when the pump is being set or running accordingly.	
MODE	MANUAL or BATCH	
RANGE	1.0 MPa - 30 mL/min 0.6 MPa - 60 mL/min 0.4 MPa - 80 mL/min 0.3 MPa -100 mL/min	
STROKE	SIN, PLS, or CONT	
ERROR	Lights at any of the error conditions.	
LED status bar	Error mode	Lights red.
	Wait mode (Standard)	Lights white.
	Wait mode (Communication)	Lights blue.
	Any time when the STOP signal is received.	Blinks in each mode.
	Setting mode	Lights white.
	When the pump in the BATCH mode is waiting for an external signal.	Lights green.
	When the pump in the MAN/BATCH mode is running for an external signal.	Flows green.
mL	Lights when the BATCH volume or the Calibration volume is being set.	
mL/min	Lights when the MAN, BATCH, or calibration speed are being set.	

■ Keypads

Power key	Turns ON/OFF the pump and LED. The linear actuators top out at shutdown.
START/STOP	Runs/Stops the pump.
▲ (UP)	Increases the numeric value or cycle through menu options.
▼ (DOWN)	Decreases the numeric value or cycle through menu options.
▶ (RIGHT)	Shifts between numeric digits or cycles through menu options.
◀ (LEFT)	Shifts between numeric digits or cycles through menu options.
CAL	Selects the calibration mode (Push to Measure).
MAX	Runs the pump at the maximum speed of the each range.
ESC	Cancels setting except the Manual/Batch operation.
ENT/SET	Confirms user settings, gives an batch signal, runs the "Push to Measure" calibration.
Fn	Function key to enter the function menus

Outer dimension

[mm]

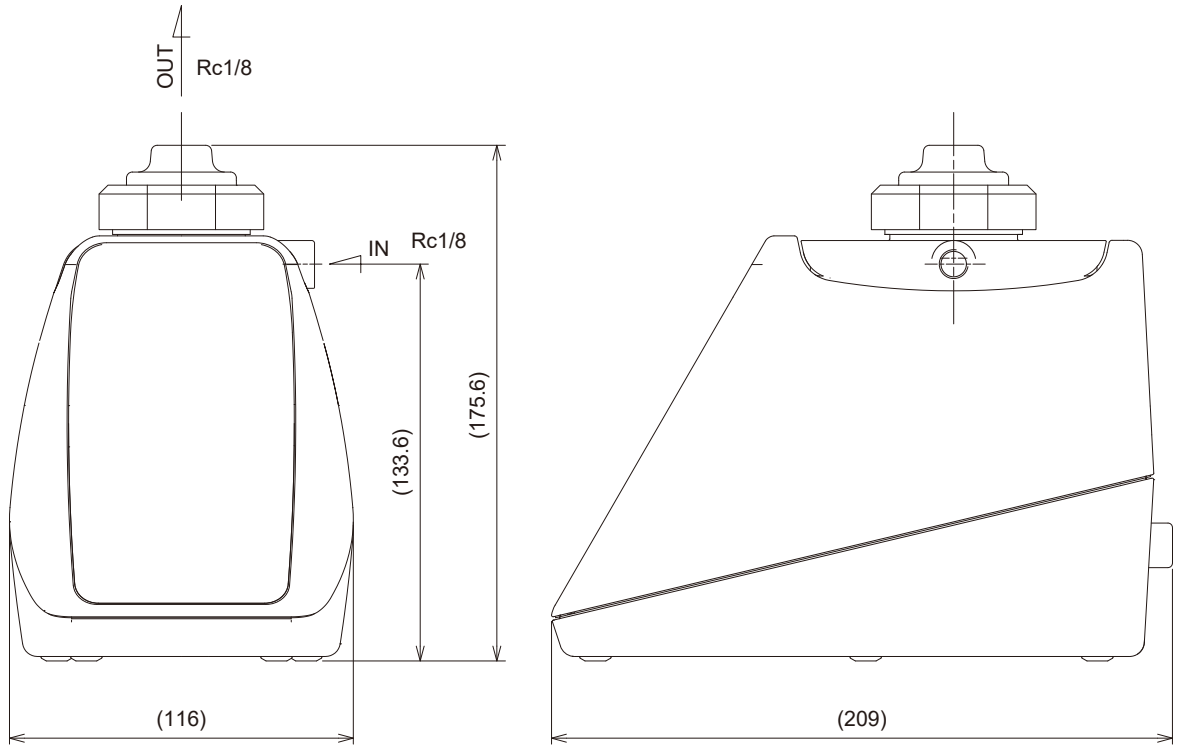

Appendix

MODBUS

Modbus is the communication protocol developed by Modicon Inc. It was originally used for the PLC, and now it becomes industrial de facto standard.

Communication protocol

Modbus is simple communication between a master and slaves. The master sends a request message and the slaves receive it.

Communication frame

Modus-RTU is composed of the following fields.

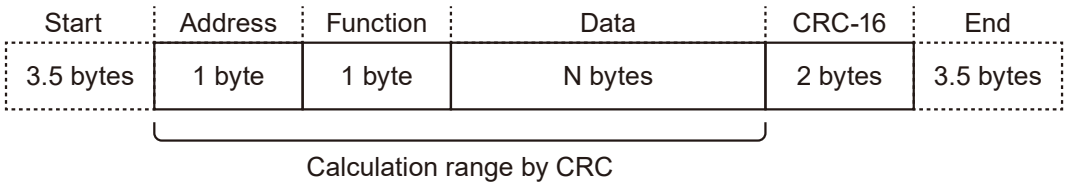

- Start/End (silent interval of each message)

A message starts and ends with a silent interval of at least 3.5 character times.

- Slave address

Each slave device assigns a slave address in the range of 1 to 247. A master device recognizes the pump (slave) by the address. When a request is sent to the address of 0, all slaves receive the request without responding a message to the master.

- Function code

Function codes are specified depending on whether the master reads or writes a register address. Set the proper code to your application.

- Data

Data is saved by each function code.

- CRC-16 error check

A Cyclical Redundancy Check method is used.

How to generate CRC-16

CRC (16 bits) is generated in the following procedures.

1. *Set the default CRC register (memory) to 0xFFFF.*
2. *XOR the first 1 byte of the message with the low order byte of the CRC register and then put the result in the CRC register.*
3. *Shift the CRC register one bit to the right toward the LSB (Put 0 in MSB).*
4. *(If the LSB was 0): Repeat Step 3 to shift another one bit.*
   (If the LSB was 1): XOR the CRC register with 0xA001 and then put the result in the CRC register.
5. *Repeat Steps 3 and 4 until 8 shifts have been completed.*
6. *Repeat Steps 2 through 5 for the next 1 byte message. Continue XORing and shifting until all bytes have been processed.*
7. *Add the final contents of the CRC register (CRC value) toward LSB of the message**

Address	Function	Data		CRC-16
0x01	0x03	Starting address	Word	0x05CB
		0x0000	0x0003	

*The upper and lower bytes of the calculated CRC must be swapped when the CRC is added to the message. If the CRC value is 0xCB05, for example, the low-order byte of (0x05) will be transmitted first, followed by (0xCB).

Exception response

A slave responds to the master's request message in normal communication. When failing to communicate with the master, the slave sends an exception response, which includes the original function code with a most significant bit of 1 and adds exception code.

Response from the slave (address: 1, function code: 4, exception code: 1)

Address	Function	Data	CRC-16
0x01	0x84	Exception code	-
		0x01	
1 byte	1 byte	1 byte	2 bytes

Communication frame for four function codes

Request/response frames for each function code are described on the next page.
Starting address for the input register subtracts 30001 from the register address.
(Register address is 30101 → Starting address is 100 (0x0064))
Starting address for the holding register subtracts 40001 from the register address.
(Register address is 40101 → Starting address is 100 (0x0064))
Word is quantity of registers per 2 bytes.

■ Function code 0x04: Input register (R)

Read an input register between 30001- 39999.

Request

Address	Function	Data		CRC-16
0x01	0x04	Starting address	Word	-
		0x0064 (100)	0x0002	
1 byte	1 byte	2 bytes	2 bytes	2 bytes

Response

Address	Function	Data			CRC-16
0x01	0x04	Byte count	Data 1	Data 2	-
		0x04	0x0001	0x0003	
1 byte	1 byte	1 byte	2 bytes	2 bytes	2 bytes

■ Function code 0x03: Holding register (R)

Read a holding register between 40001- 49999.

Request

Address	Function	Data		CRC-16
0x01	0x03	Starting address	Word	-
		0x0064 (100)	0x0002	
1 byte	1 byte	2 bytes	2 bytes	2 bytes

Response

Address	Function	Data			CRC-16
0x01	0x03	Byte count	Data 1	Data 2	-
		0x04	0x0001	0x0003	
1 byte	1 byte	1 byte	2 bytes	2 bytes	2 bytes

■ Function code 0x06: Holding register (W)

Write a holding register between 40001- 49999.

Request

Address	Function	Data		CRC-16
		Starting address	Data	
0x01	0x06	0x0064	0x0002	-
1 byte	1 byte	2 bytes	2 bytes	2 bytes

Response

Address	Function	Data		CRC-16
		Starting address	Data	
0x01	0x06	0x0064	0x0002	-
1 byte	1 byte	2 bytes	2 bytes	2 bytes

■ Function code 0x10: Holding registers (W)

Write holding registers between 40001- 49999.

Request

Address	Function	Data					CRC-16
		Starting address	Word	Byte count	Data 1	Data 2	
0x01	0x10	0x0064 (100)	0x0002	0x04	0x0005	0x0064	-
1 byte	1 byte	2 bytes	2 bytes	1 byte	2 bytes	2 bytes	2 bytes

Response

Address	Function	Data		CRC-16
		Starting address	Word	
0x01	0x10	0x0064	0x0002	-
1 byte	1 byte	2 bytes	2 bytes	2 bytes

Communication sequence

See following reference sequence to be applicable to your system.

Modbus basic sequence

Master/slaves communicate in the same order with the manual operation in the STD (standard) mode. For example, set the MODE first, followed by the RANGE and then the STROKE.

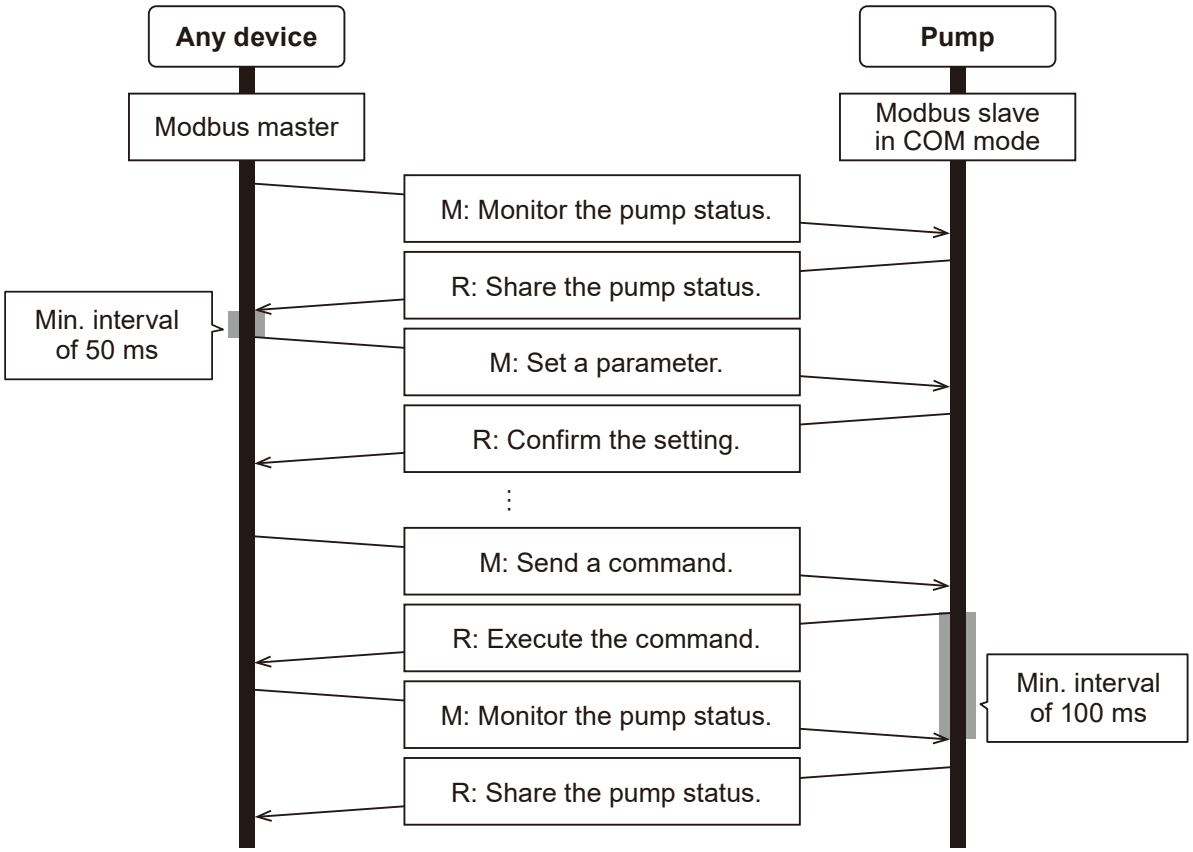

■ Sequence description

1) The master checks the pump status.
2) The master sets a parameter. See page 43 and following.
3) The master continues to set parameters corresponding to your system.
4) The master sends a command so that the slave executes it.
5) The slave takes time to behave as the executed command.
   Ensure a min interval of 100 ms between commends.
6) The master monitors parameters to check the pump behaves corresponding to the request.

*After receiving a response from the pump, the master should wait at least 50 ms to send a next request to the pump.

*M: Request message by the master
R: Response message by the slaves

Basic setup example (MAN mode)

Sequence the communication between the master and slave(s) in the same manner as during manual operation in STD mode. Flow rate, speed, volume settings, and CAL-adjusted parameters vary depending on the RANGE option. After changing the RANGE option, recalibrate the pump actual flow rate and verify that the flow rate conforms to your specifications.

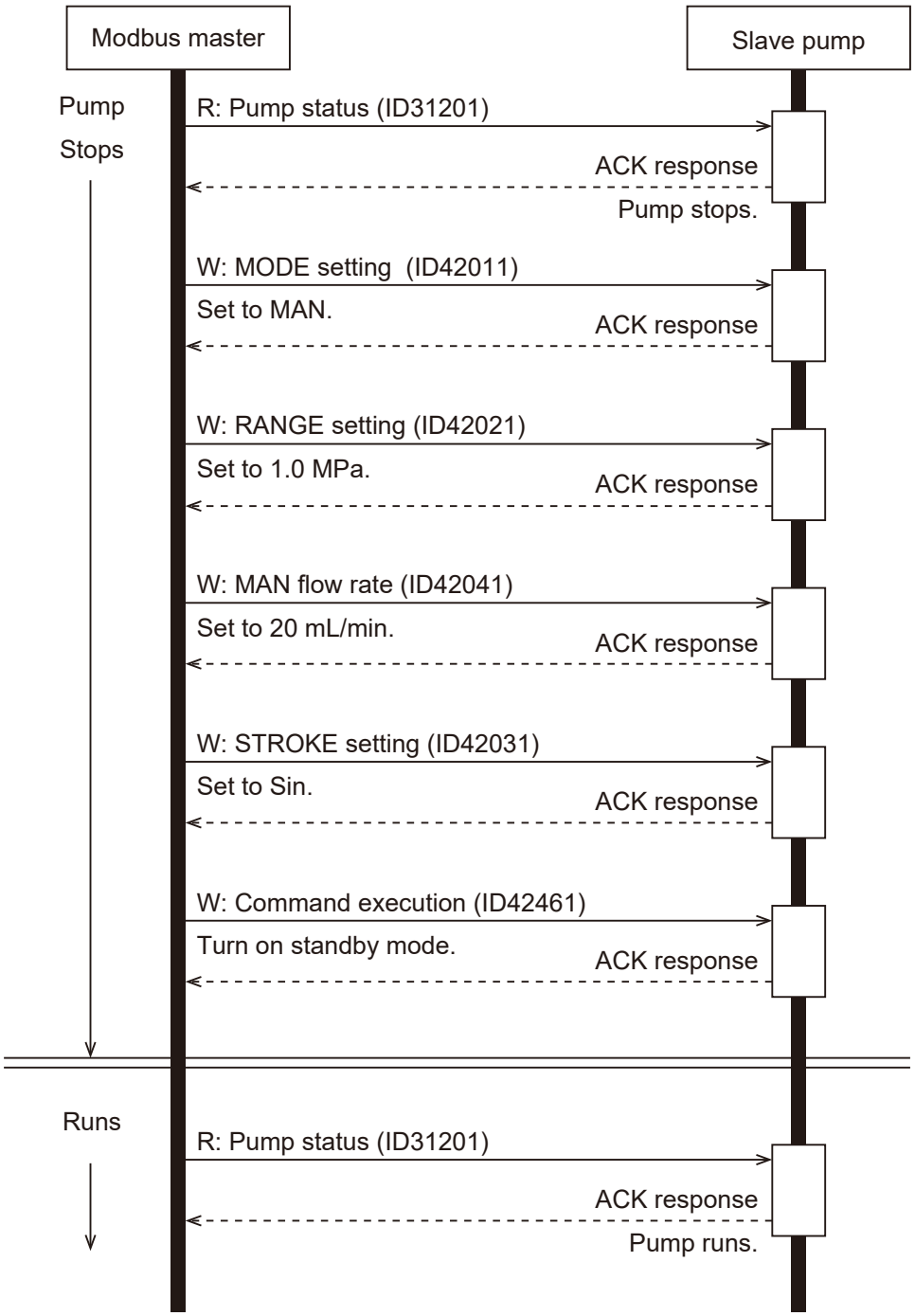

MAN start/stop setup example (for the slave address of 21)

A sequence example of the manual operation is described as below with the Modbus packet.
*A response for the pump status changes with the current mode of the pump.

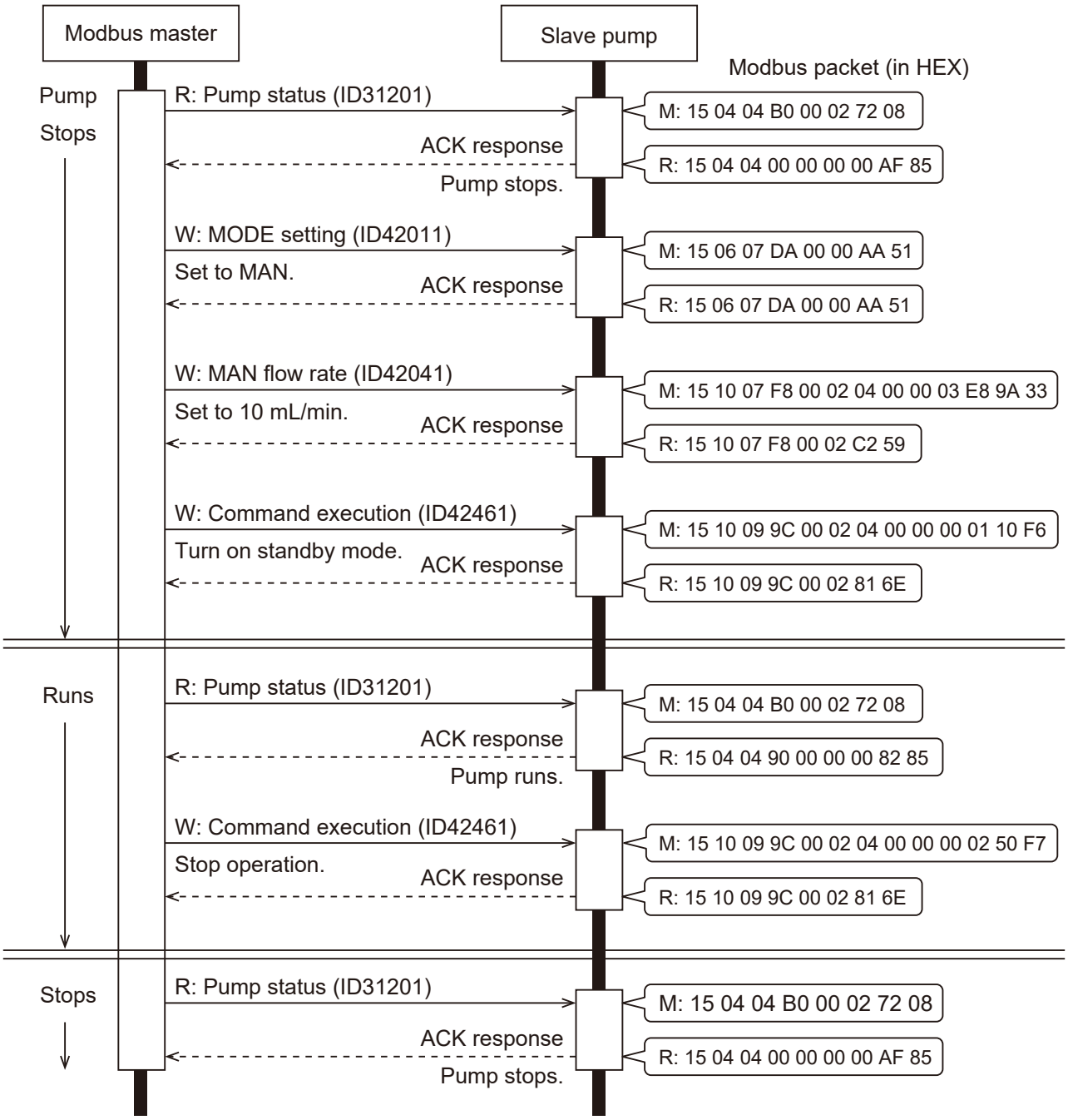

Flow rate adjustment setup example (MAN mode)

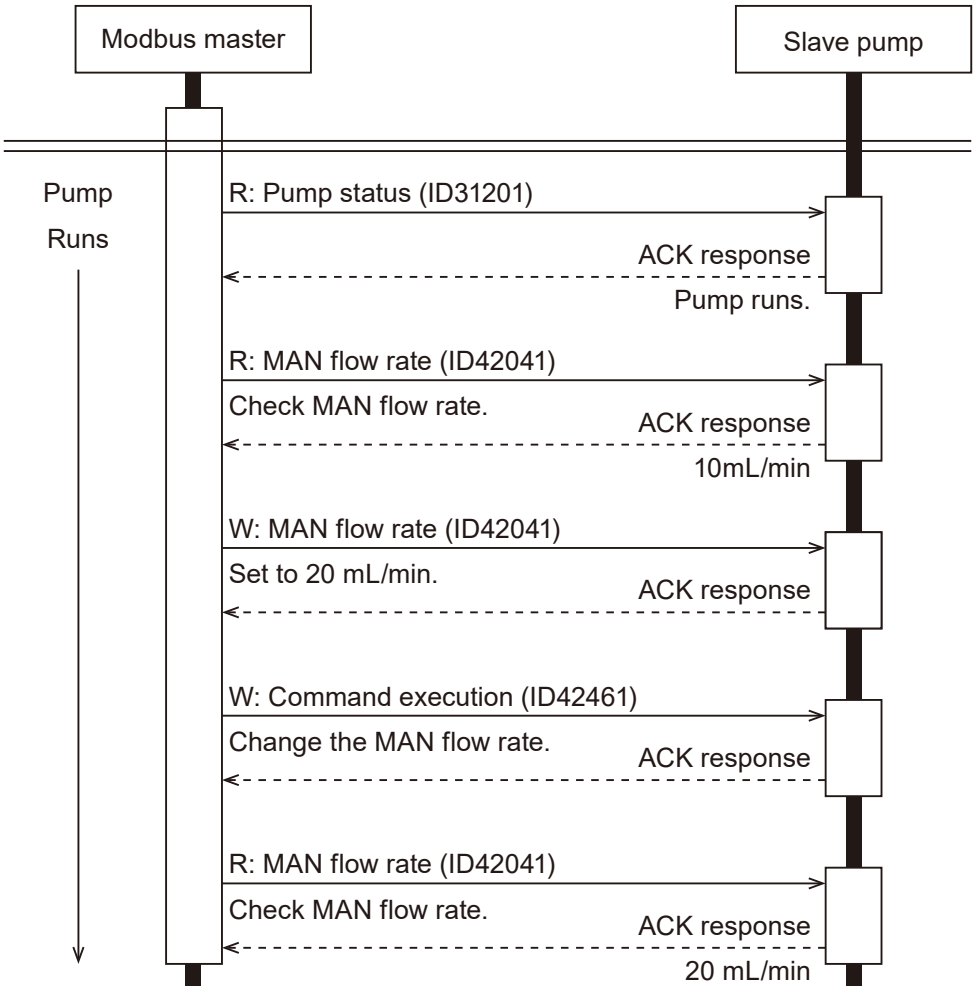

BATCH start and completion example

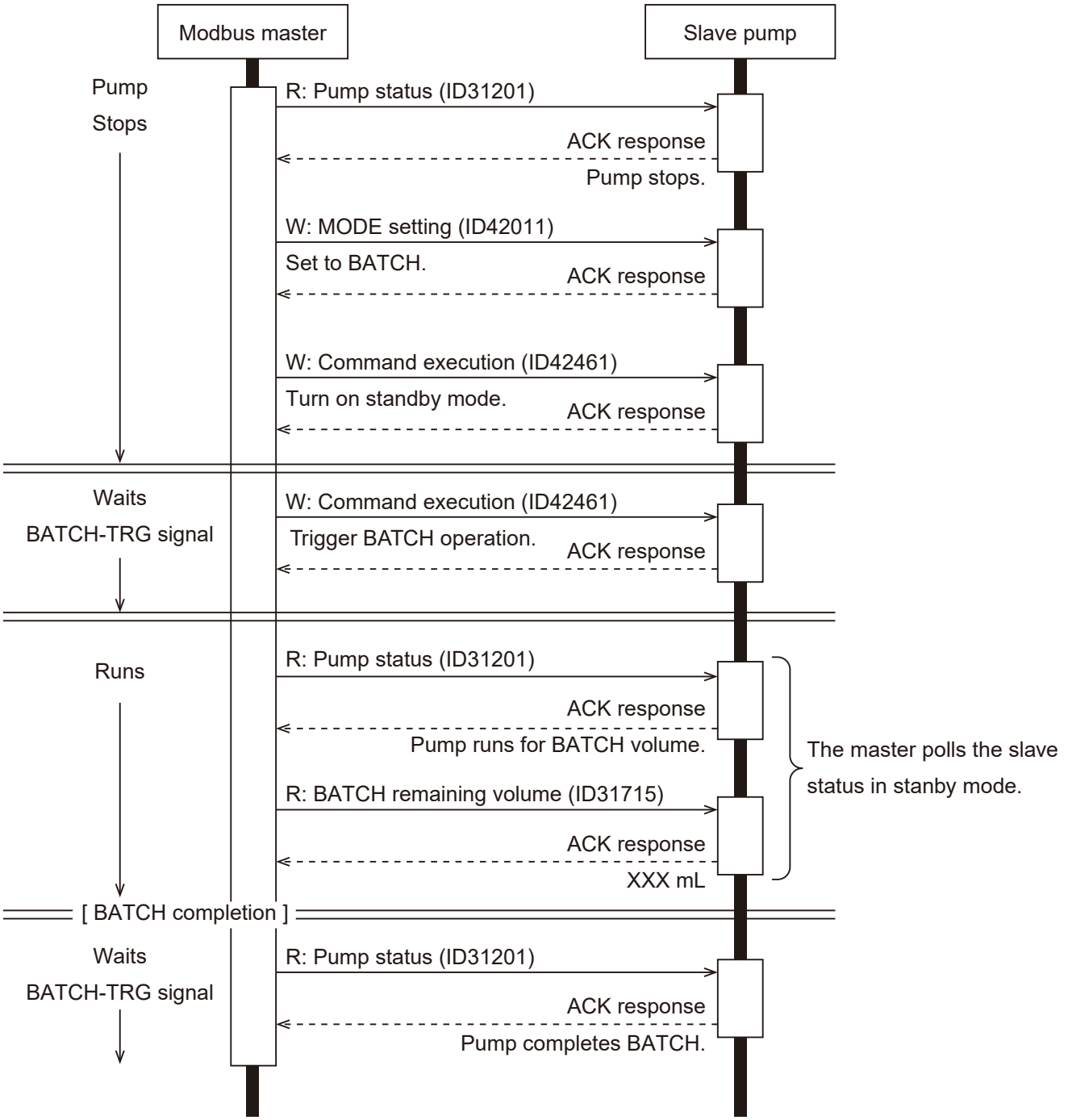

BATCH abort example

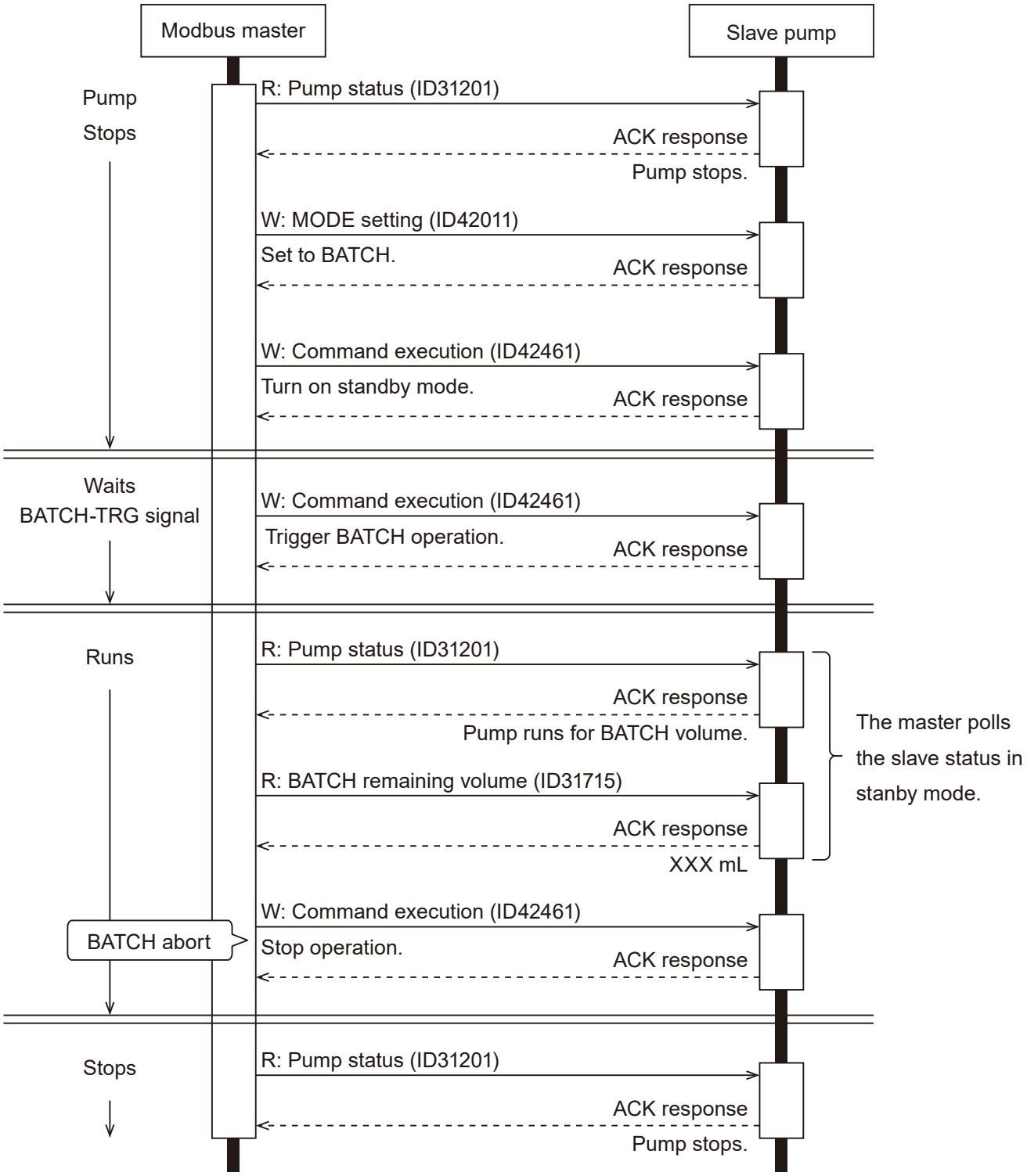

CAL setup example

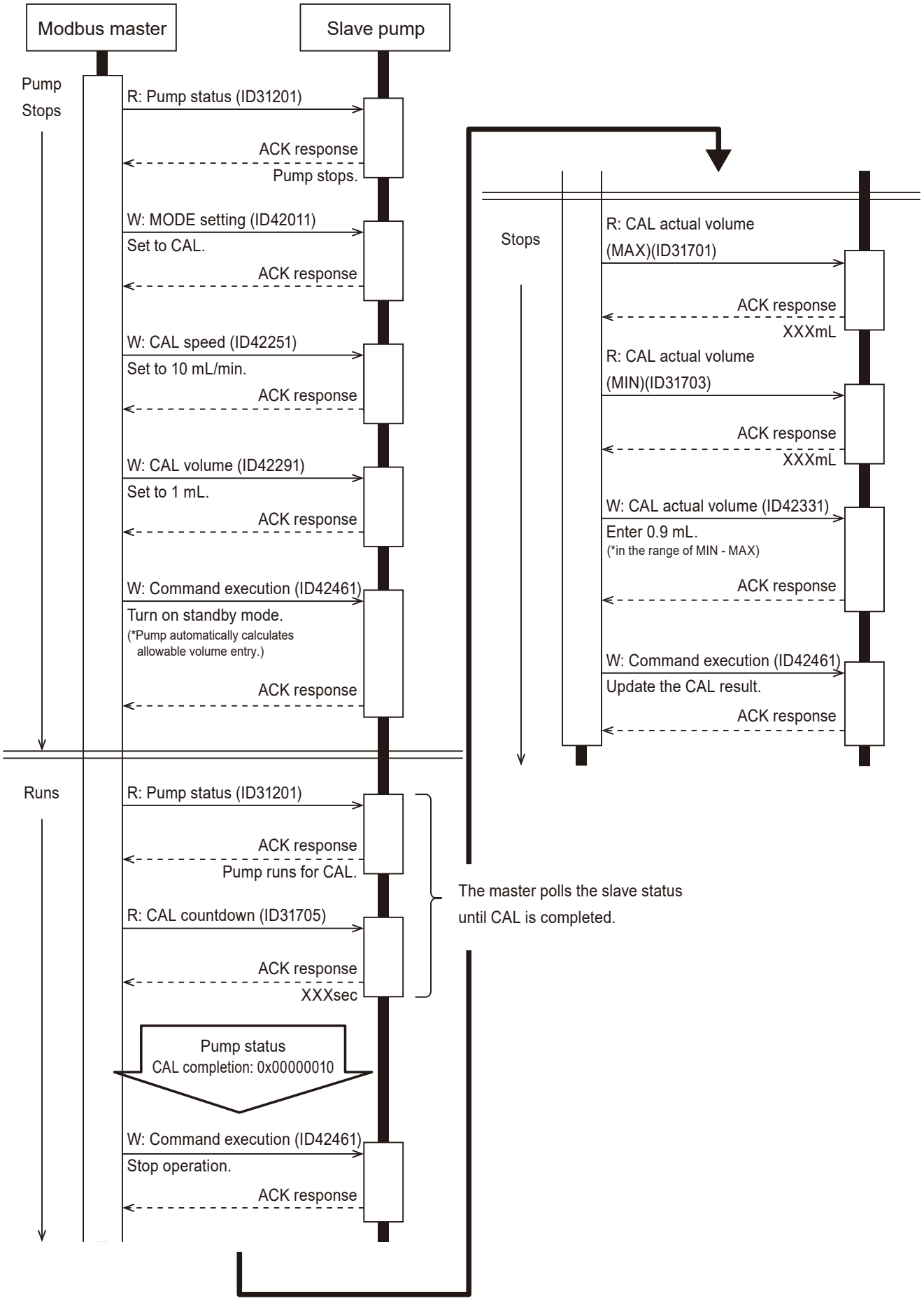

Count then Calibrate example

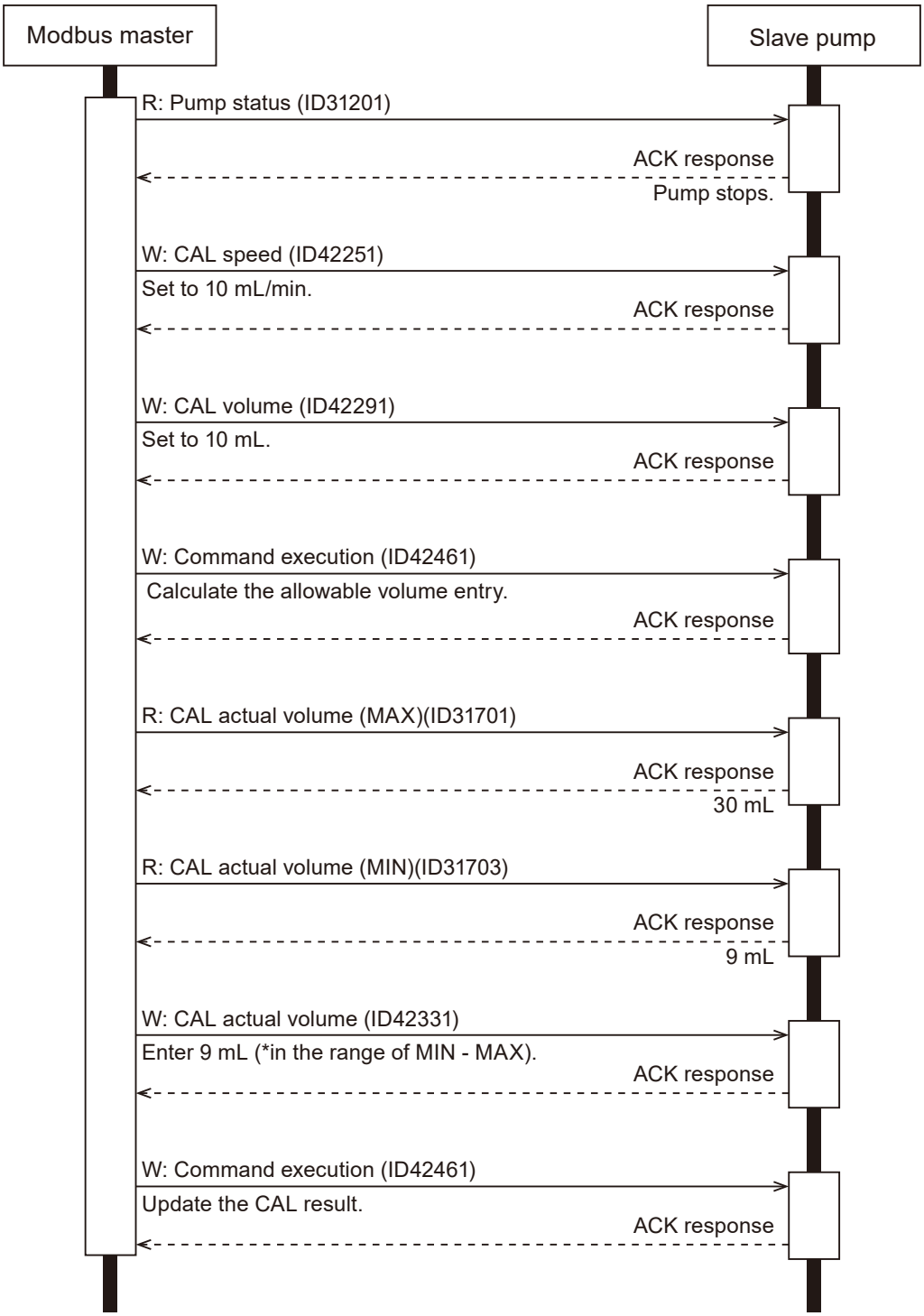

Tuning example

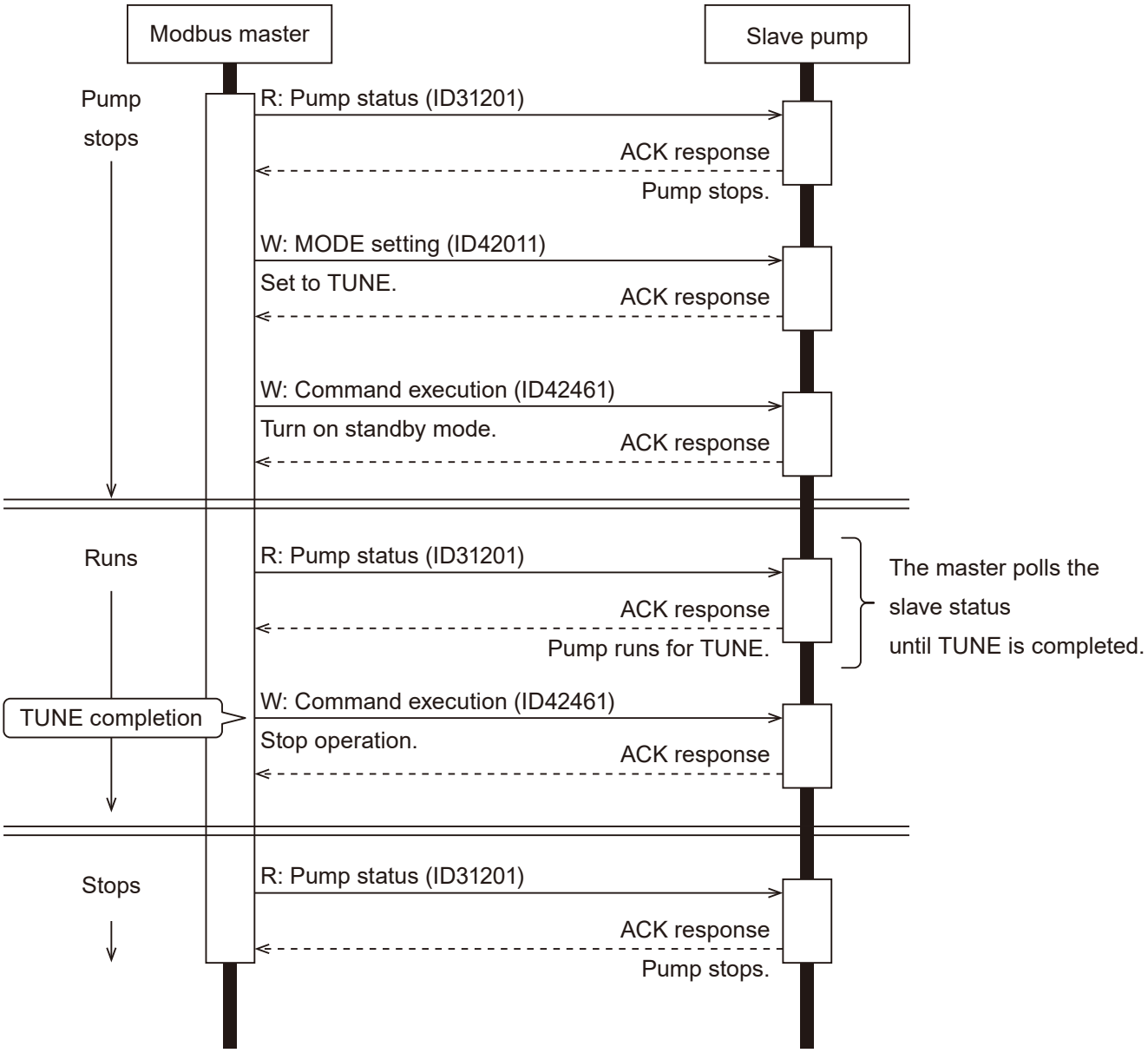

Pump identification (with Extra data saving_0)

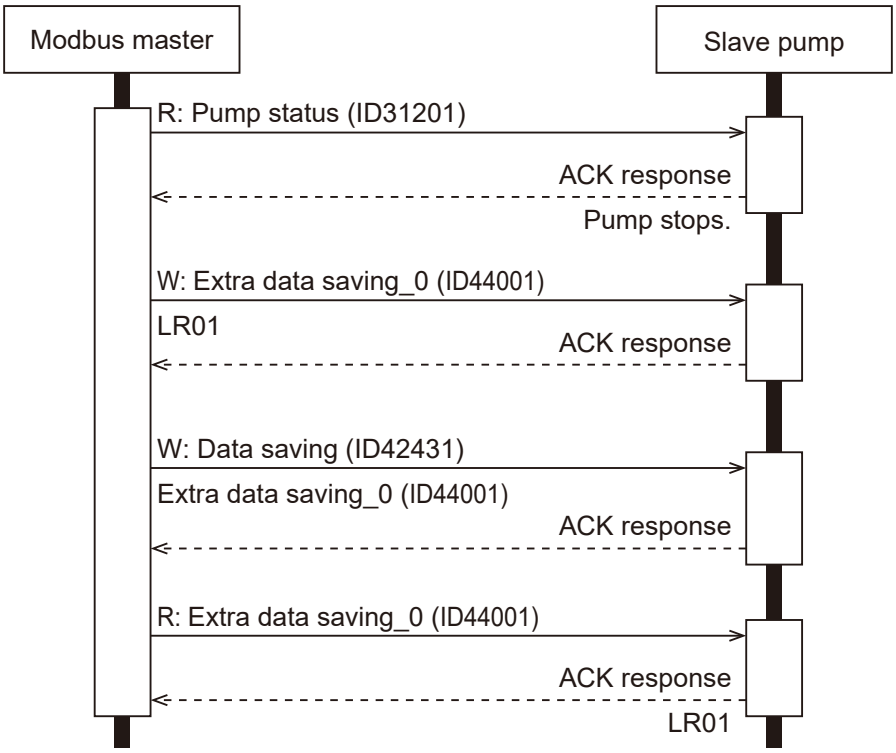

Power off pump

*When the linear actuators are turned OFF, both diaphragms and linear actuators return to the top dead centre. At this point, a small amount of liquid (less than 1.5 mL) is also pushed out. Take this into consideration if this small amount of excess could be a problem.

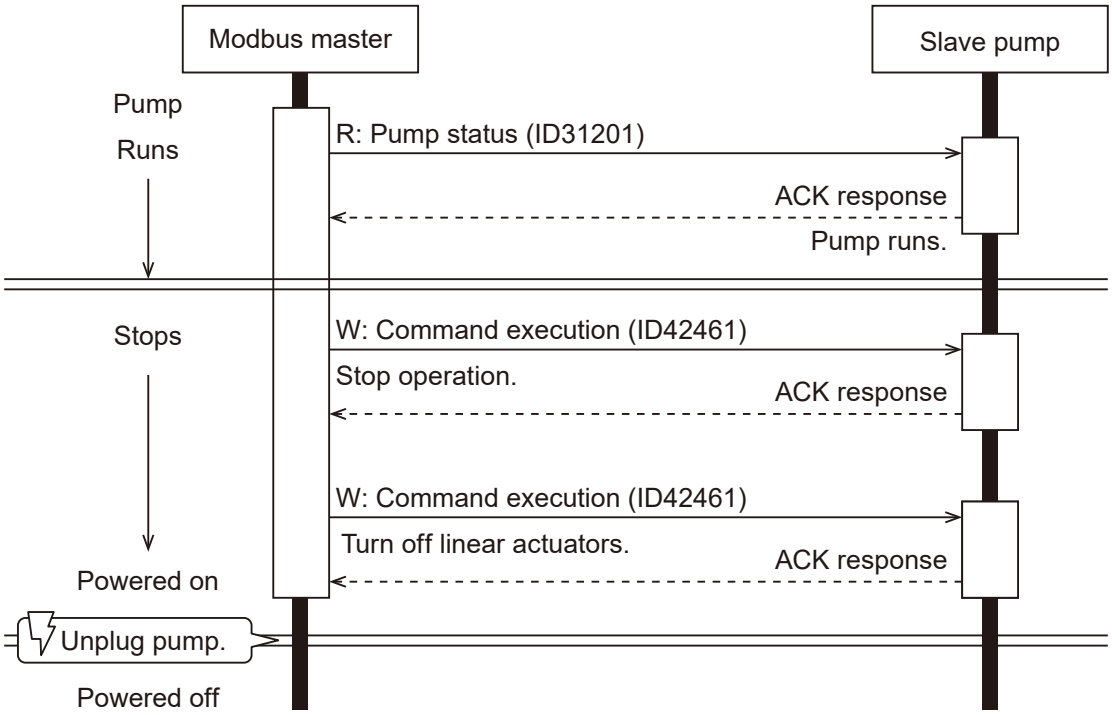

EC DECLARATION OF CONFORMITY

A copy of the original Declaration of Conformity

(SUPPLIER'S NAME)

WE

IWAKI CO.,LTD.

(ADDRESS)

6-6 2-CHOME KANDA-SUDACHO CHIYODA-KU TOKYO JAPAN

(PRODUCT)

DECLARE UNDER OUR SOLE RESPONSIBILITY THAT THE PRODUCTS

LINEAR PUMP

(MODEL NAME)

LR SERIES

TO WHICH THIS DECLARATION RELATES ARE IN CONFORMITY WITH THE FOLLOWING STANDARDS AND DIRECTIVES AS FAR AS APPLICABLE

(DIRECTIVES)

MACHINERY DIRECTIVE 2006/42/EC (ANNEX IIA)
EMC DIRECTIVE 2014/30/EU
RoHS DIRECTIVE 2011/65/EU

(STANDARDS)

EN ISO12100: 2010
EN809: 1998 + A1: 2009
EN61326-1: 2013
EN IEC63000: 2018

(A PERSON WHO IS AUTHORISED TO COMPILE THE TECHNICAL FILE IN THE COMMUNITY)

IWAKI EUROPE GMBH
SIEMENSRING 115 D-47877 WILLICH GERMANY

NOTE: THIS DECLARATION BECOMES INVALID IF TECHNICAL OR OPERATIONAL MODIFICATIONS ARE INTRODUCED WITHOUT THE MANUFACTURER'S CONSENT.

水村貴裕

TAKAHIRO MIZUMURA
EXECUTIVE OFFICER SENIOR GENERAL MANAGER,
ENGINEERING HEAD OFFICE

Tokyo, Oct. 2, 2026

(PLACE AND DATE OF ISSUE) **(NAME AND SIGNATURE OR EQUIVALENT MARKING OF AUTHORIZED PERSON)**

DOCUMENT NO. IS-51K-629

UK DECLARATION OF CONFORMITY

A copy of the original Declaration of Conformity

(SUPPLIER'S NAME)

WE

IWAKI CO.,LTD.

(ADDRESS)

6-6 2-CHOME KANDA-SUDACHO CHIYODA-KU TOKYO JAPAN

(PRODUCT)

DECLARE UNDER OUR SOLE RESPONSIBILITY THAT THE PRODUCTS

LINEAR PUMP

(MODEL NAME)

LR SERIES

TO WHICH THIS DECLARATION RELATES ARE IN CONFORMITY WITH THE FOLLOWING REGULATIONS AND STANDARDS AS FAR AS APPLICABLE

(REGULATIONS)

S.I. 2008/1597 SUPPLY OF MACHINERY (SAFETY)
S.I. 2016/1091 ELECTROMAGNETIC COMPATIBILITY
S.I. 2012/3032 RESTRICTION OF HAZARDOUS SUBSTANCES

(STANDARDS)

EN ISO12100: 2010
EN809: 1998 + A1: 2009
EN61326-1: 2013
EN IEC63000: 2018

(A PERSON WHO IS AUTHORISED TO COMPILE THE TECHNICAL FILE IN THE UK MARKET)

SENSYS LIMITED
24 VISION PARK PRESTON PLACE UPPER CALDECOTE
BIGGLESWADE SG18 9GQ

NOTE: THIS DECLARATION BECOMES INVALID IF TECHNICAL OR OPERATIONAL MODIFICATIONS ARE INTRODUCED WITHOUT THE MANUFACTURER'S CONSENT.

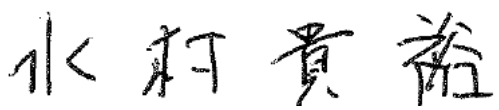

TAKAHIRO MIZUMURA
EXECUTIVE OFFICER SENIOR GENERAL MANAGER, ENGINEERING HEAD OFFICE

Tokyo, Oct. 2, 2026

(PLACE AND DATE OF ISSUE) **(NAME AND SIGNATURE OR EQUIVALENT MARKING OF AUTHORIZED PERSON)**

DOCUMENT NO. IS-51K-630

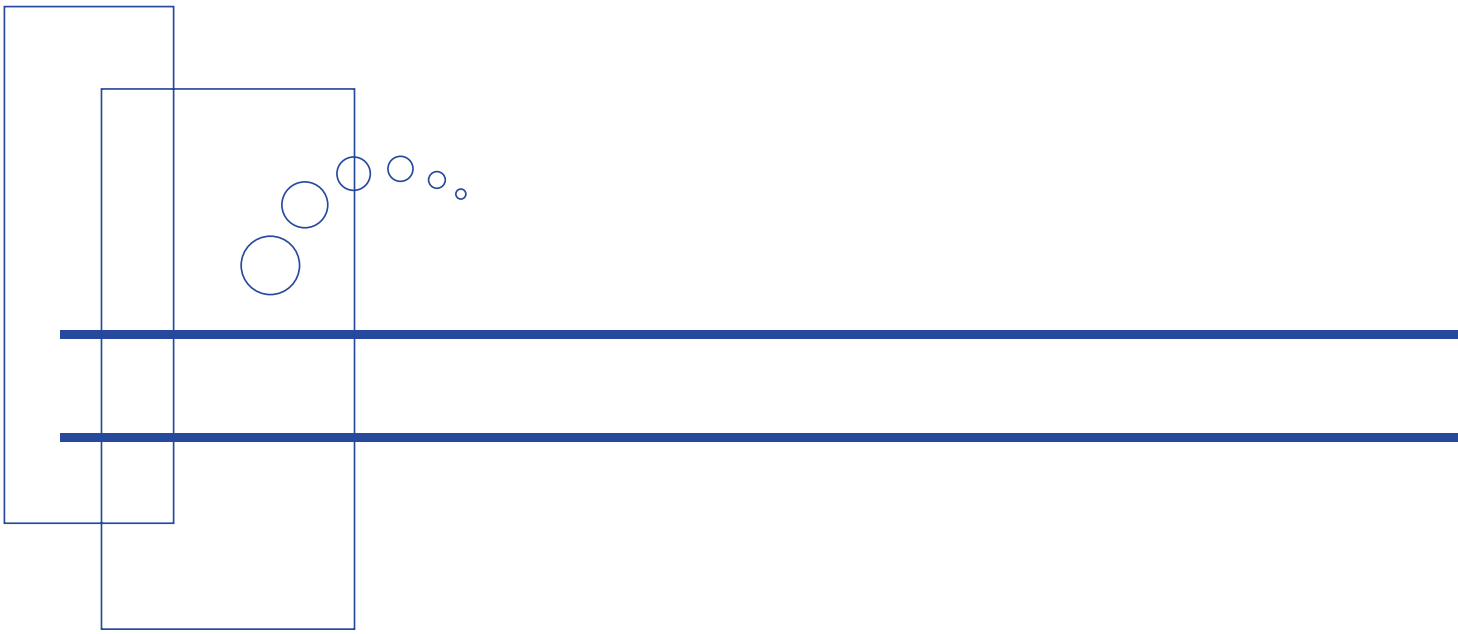

https://www.iwakipumps.jp

IWAKI CO.,LTD. 6-6 Kanda-Sudacho 2-chome Chiyoda-ku Tokyo 101-8558 Japan
TEL: +81 3 3254 2935 FAX: +81 3 3252 8892

European Headquarter / IWAKI Europe GmbH
TEL: +49 2154 9254 0 FAX: +49 2154 9254 48
Germany / IWAKI Europe GmbH
TEL: +49 2154 9254 50 FAX: +49 2154 9254 55
The Netherlands / IWAKI Europe GmbH (Netherlands Branch)
TEL: +31 74 2420011 FAX: +49 2154 9254 48
Italy / IWAKI Europe GmbH (Italy Branch)
TEL: +39 0445 561219 FAX: +39 0445 569088
Spain / IWAKI Europe GmbH (Spain Branch)
TEL/FAX: +34 934 741 638
Poland / IWAKI Europe GmbH (East Europe Branch)
TEL: +48 12 347 0755 FAX: +48 12 347 0900
Denmark / IWAKI Nordic A/S
TEL: +45 48 242345
Finland / IWAKI Suomi Oy
TEL: +358 10 201 0490
Norway / IWAKI Norge AS
TEL: +47 23 38 49 00

Sweden / IWAKI Sverige AB
TEL: +46 8 511 72900
Belgium / IWAKI Belgium N.V.
TEL: +32 13 670200 FAX: +32 13 672030
France / IWAKI France S.A.
TEL: +33 1 69 63 33 70 FAX: +33 1 64 49 92 73
U.S.A. / IWAKI America Inc.
TEL: +1 508 429 1440 FAX: +1 508 429 1386
Brazil / IWAKI Do Brasil Comercio De Bombas Hidraulicas LTDA.
TEL/FAX: +55 19 3244 5900
China (Shanghai) / IWAKI Pumps (Shanghai) Co., Ltd.
TEL: +86 21 6272 7502 FAX: +86 21 6272 6929
China (Hong Kong) / IWAKI Pumps Co., Ltd.
TEL: +852 2607 1168 FAX: +852 2607 1000
China (Guangzhou) / GFTZ IWAKI Engineering & Trading Co., Ltd.
TEL: +86 20 84350603 FAX: +86 20 84359181
China (Shenzhen) / IWAKI Pumps (Shenzhen) Co., Ltd.
TEL: +86 0755 8656 3696

Singapore / IWAKI Singapore Pte Ltd.
TEL: +65 6316 2028 FAX: +65 6316 3221
Indonesia / IWAKI Singapore Pte Ltd. (Indonesia Office)
TEL: +62 21 6906606 FAX: +62 21 6906612
Malaysia / IWAKIm SDN. BHD.
TEL: +60 3 7803 8807 FAX: +60 3 7803 4800
Korea / IWAKI Korea Co., Ltd.
TEL: +82 2 6238 4800 FAX: +82 2 6238 4801
Taiwan / IWAKI Pumps Taiwan Co., Ltd.
TEL: +886 2 8227 6900 FAX: +886 2 8227 6818
Thailand / IWAKI (Thailand) Co., Ltd.
TEL: +66 2 322 2471 FAX: +66 2 322 2477
Australia / IWAKI Pumps Australia Pty Ltd.
TEL: +61 2 9899 2411 FAX: +61 2 9899 2421

T1276 '26/04