IWAKI PUMPS

IWAKI
Magnetic Drive Gear Pump
MDG-R15 (built-in type)
Instruction Manual

⚠ Read this manual before use of product

Thank you for having selected IWAKI's magnetic drive gear pump model MDG-R15. This instruction manual deals with the correct handling and operation of the pump. You are requested to read this manual prior to installing and using the pump to ensure safe and long life of the pump. The content of this manual may be changed without notice.

Contents

Safety Instructions 1, 2
Outline of Product
1.Unpacking and inspection 3
2.Operating Principle 3
3.Model identification 4
4.Specification 4
5.Dimension 5
6.Main parts and label 5
7.Performance curves 6
Installation
1.Before use of product 7
2.Precautions on operation 7, 8
3.Installation, piping and wiring ..... 9 ~ 11
Operation
1.Operation 12
2.Stopping 12
Maintenance
1.Troubleshooting 13
2.Maintenance and Inspection 14
3.Spare parts 14
4.Disassembling and assembling ..... 15 ~ 19
5.Construction and parts names 20
EC DECLARATION OF CONFORMITY 21
CE conformity 21
Waste Electrical and Electronic Equipment (WEEE) 21

Important Instruction

For the Safe and Correct Handling of the Pump

- "Safety Instruction" section deals with important details about handling of the product. Before use, read this section carefully for the prevention of personal injury or property damage.
- Observe the instructions accompanied with "WARNING" or "CAUTION" in this manual. These instructions are very important for protecting pump users from dangerous situations.
- The symbols on this instruction manual have the following meanings:

⚠ **WARNING**	**Nonobservance or misapplication of the contents of "Warning" section could lead to a serious accident which may result in death.**
⚠ **CAUTION**	**Nonobservance or misapplication of the contents of "Caution" section could lead to personal injury or property damage.**

Types of Symbols

	Indicates a prohibited action or procedure. Inside or near this circle, a concrete and practical image of the activity to be avoided is depicted.
	Indicates an important action or procedure which must be performed or carried out without fail. Failure to follow the instructions herein can lead to malfunction or damage to the pump.

⚠ Export Restrictions

Technical information contained in this instruction manual might be treated as controlled technology in your countries, due to agreements in international regime for export control.
Please be reminded that export license/permission could be required when this manual is provided, due to export control regulations of your country.

Safety Instructions

⚠ WARNING

- **Turn off power before service**
  Risk of electrical shock. Be sure to turn off power to stop the pump and related devices before service is performed.


Electrical shock

- **Stop operation**
  If you notice any abnormal or dangerous conditions, suspend operation immediately and inspect/solve problems.



- **Do not use the pump in any condition other than its intended purpose**
  The use of the pump in any conditions other than those clearly specified may result in failure or injury. Use this product in specified conditions only.


Prohibited

- **Do not modify the pump**
  Alternations to the pump carry a high degree of risk. It is not the manufacturer's responsibility for any failure or injury resulting from alterations to the pump.


Do not rework or alter

- **Wear protective clothing**
  Always wear protective clothing such as an eye protection, chemical resistant gloves, a mask and a face shield during disassembly, assembly or maintenance work.


Wear protectors

⚠ CAUTION

- **Qualified personnel only**
  The pump should be handled or operated by qualified personnel with a full understanding of the pump. Any person not familiar with the product should not take part in the operation or maintenance of the pump.


Prohibited

- **Use specified power only**
  Do not apply power other than that specified on the nameplate. Otherwise failure or fire may result. Ensure the pump is properly grounded.


Prohibited

- **Do not touch the pump or pipe with bare hands**
  Risk of burns. The surface temperature of the pump or piping becomes very high during and immediately after operation, depending on the liquid temperature.


Caution

- **Keep electric parts and wiring dry**
  Risk of fire or electric shock. Install the pump where it can be kept dry.


Prohibited

- **Ventilation**
  Fumes or vapours can be hazardous with certain solutions. Ensure proper ventilation at the operation site.


Caution

- **Spill precautions**
  Ensure protection and containment of solution in the event of plumbing or pump damage (secondary containment).


Prohibited

- **Do not use a damaged pump**
  Use of a damaged pump could lead to an electric shock or death.


Electrical shock

⚠ CAUTION

- **Do not use the pump in a wet location**
  The pump is not waterproof. Use of the pump in wet or extremely humid locations could lead to electric shock or short circuit.


Prohibited

- **Do not damage the power cable**
  Do not pull, knot, or crush the power cable. Damage to the power cable could lead to a fire or electrical shock if cut or broken.


Caution

- **Do not cover the pump with a cloth**
  Covering the pump may cause heat to build up in the motor, resulting in fire or electrical/ mechanical failure.



- **Grounding**
  Risk of electric shock! Always properly ground the pump. Conform to local electric codes.


Earthing

- **Install a GFCI (earth leakage breaker)**
  An electrical failure of the pump may adversely affect other devices on the same line. Purchase and install a GFCI (earth leakage breaker) separately.


Electrical shock

- **The power cable is not replaceable**
  Do not use a damaged power cable, as it may result in fire or electric shock. If the cable is damaged, the entire pump unit must be replaced.


Prohibited

- **Preventative maintenance**
  Follow instructions in this manual for replacement of wear parts. Do not disassemble the pump beyond the extent of the instructions.



⚠ CAUTION

- **Do not install or store the pump:**
  - In a flammable/explosive/corrosive atmosphere.
  - In a dusty/humid environment.
  - Where ambient temperature can exceed 0-40°C.
  - In direct sunlight or wind & rain.


Prohibited

- **Use of hazardous chemicals**
  Risk of personal injury or fire. Check the piping system for leaks before and during operation when handling flammable, corrosive, or hazardous liquids.


Caution

- **Do not drain liquid onto the floor**
  The liquid discharged from the pump must be drained into a special container. Never drain it directly onto the floor.


Prohibited

- **Disposal of a used pump**
  Dispose of any used or damaged pump in accordance with local rules and regulations. See the last page of the manual to comply with the European Directive 2012/19/EU on waste electrical and electronic equipment.



- **Static electricity**
  When low electric conductivity liquids such as ultra-pure water and fluor inactive liquid (e.g. Fluorinert™) are handled, static electricity may generate in the pump and may cause static discharge. Take countermeasures to remove static electricity.



Outline of Product

1. Unpacking and inspection

After unpacking the product, check to see:

1) If model name, discharge capacity, discharge pressure, voltage etc. shown on the nameplate are those that you order.



Spec label (pump unit) for the European market



Spec label (pump with no motor) for the European market

*The CE marking on our product(s) is for us to market the product(s) into the European market, however, the CE marking does not ensure any safety or conformity of the product(s) outside the European market.
When the pump is incorporated into the equipment marketed in the European market, such equipment must meet all the requirements of applicable directives.
In such a case, any person who places the equipment on the market must carry a CE mark on the equipment as a manufacturer.

2) If the product is not damaged or its bolts and nuts are not loosened during transportation.

If you find any abnormality, please contact your dealer.

2. Operating principle

IWAKI magnetic drive gear pump MDG-R15 consists of a pair of gears driven by magnetic coupling and the casing which contains the gears. (Fig. A)
The liquid which gets into from suction side enters into gear grooves and is transferred to discharge side by the rotation of gears. (Fig. B and C)

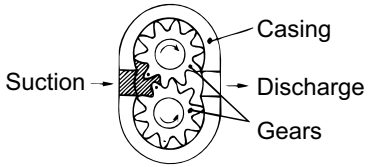

Fig. A

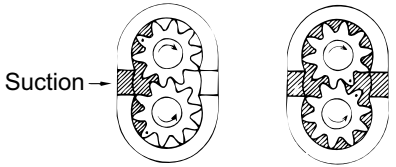

Fig. B Fig. C

Outline of Product

3. Model identification

MDG - R 15 T 220

(1) (2) (3) (4)

(1) Pump type

(2) Pump size
15 : 5.5 ml/revolution

(3) Allowable liquid temperature and material of gear/bearing
T : 0 - 45 deg. C PTFE gear, GFRPTFE bearing
P : 0 - 45 deg. C PEEK gear, (CF +PTFE) PPS bearing
K: 0 - 95 deg. C PTFE gear, GFRPTFE bearing
C : 0 - 95 deg. C PEEK gear, (CF + PTFE) PPS bearing

(4) Motor voltage
220 : 220 – 240V single phase

4. Specification

50/60Hz

	Pump bore	Max. flow L/min.	Max. disch. press. MPa	Max. vacuum KPa (abs)	Rated speed rpm	Motor specification			Mass kg
						Rated voltage	Rated ampere	Type	
MDG-R15T220	Rc3/8	14/17	0.3	5.33	2800/3300	AC 220-240	1.4/1.5	Single phase induction motor capacitor run	7.8
MDG-R15K220		12.5/15		8.00					
MDG-R15P220		14/17		5.33					
MDG-R15C220		12.5/15		8.00					

Note 1. Performance shown above is based on pumping clear water at 25 deg. C. (discharge capacity changes according to the pumped liquid temperature. Ask IWAKI for details.
2. Allowable ambient temperature is 0 - 40 deg. C.
3. Allowable viscosity of pumped liquid is up to 30 mPa-s.
4. Maximum operating noise is 65dB or below.
(1m away from the front of a pump, A scale)

Outline of Product

5. Dimension

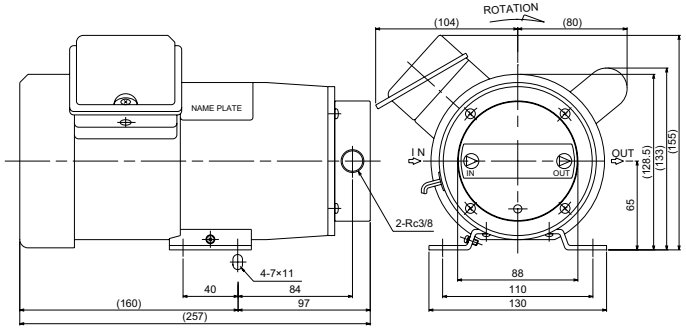

MDG-R15 ( ) 220

6. Main parts and label

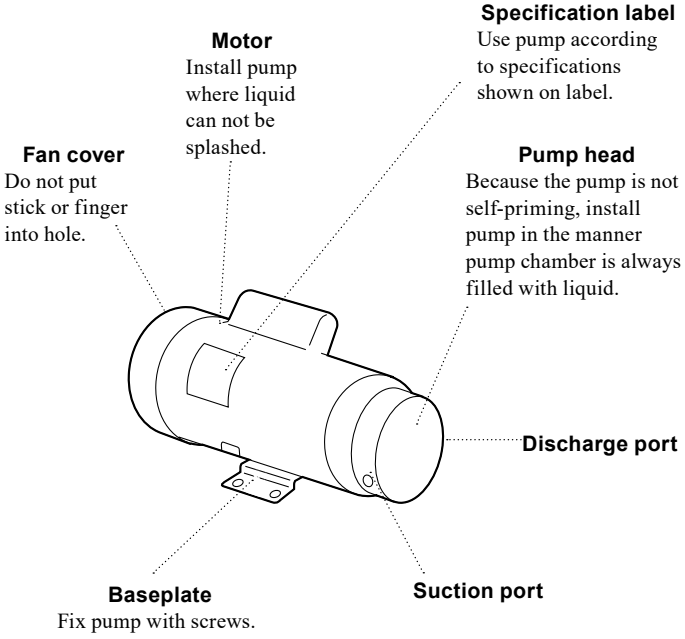

7. Performance curves

MDG-R15T220
MDG-R15P220

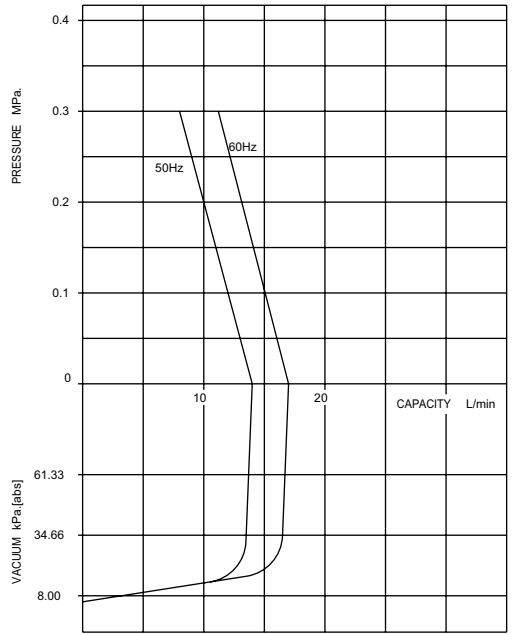

MDG-R15K220
MDG-R15C220

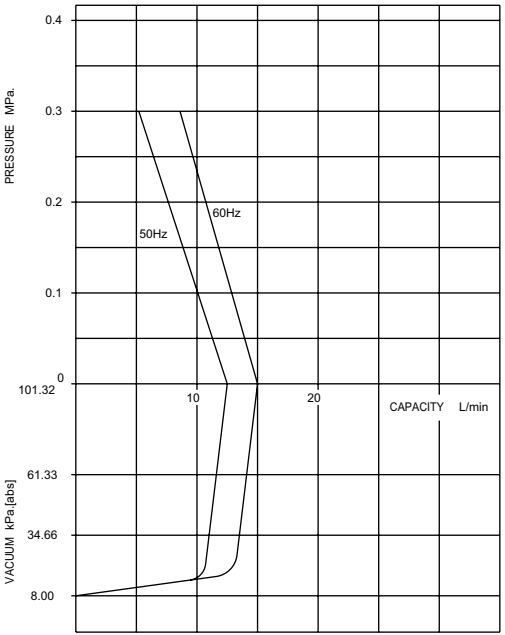

Installation

1. Before use of product

⚠ CAUTION

Do not run pump dry
Dry running of pump causes quick wearing of gear and bearing.

Do not close discharge and suction valves
If pump is operated with suction and discharge valves closed, temperature inside pump excessively increases in a short time resulting in pump failure or burning. Operate pump with valves opened.

Do not install pump outdoor
Motor is not water-proof construction. If liquid is splashed on motor, it may cause fire or damage of motor. Do not install pump outdoor.

Keep fire away from pump
Do not put dangerous or flammable substance around pump.

Damaged pump
Do not use damaged pump to avoid short-circuit or electrical shock.

2. Precautions on operation

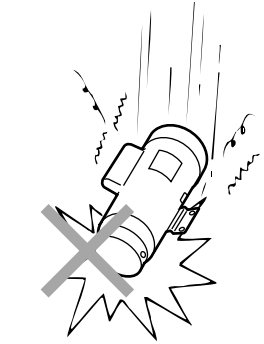

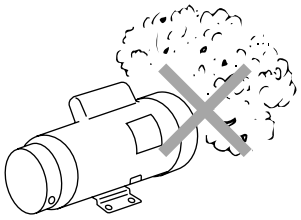

(1) **Handle pump carefully**
Strong impacts on pump caused by dropping it on floor or so may result in damage or faulty performance of pump.

(2) **Do not touch pump**
Pump/motor is very hot during operation or just after it is stopped. Do not touch it with bare hand.

(3) **Prime pump**
Pump is not self-priming. Prime pump with liquid before starting pump.

(4) **Keep pump away from dusty atmosphere**
Do not use pump at dusty atmosphere and take measures for dust not to adhere to motor.

Installation

(5) **Install earth leakage breaker**
Install earth leakage breaker to avoid accident such as electrical shock etc.

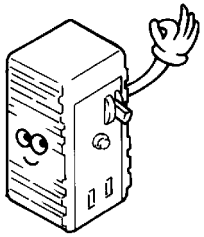

(6) **Do not splash liquid on motor.**
If motor or wires are wetted by splashed liquid, it may cause fire or electrical shock. Install pump at place where liquid can not be splashed on pump/ motor.

(7) **Place to be installed**
Do not install or store pump at following places.
- where exposed to direct sunlight
- where ambient temperature increases to 40 deg. C or more
- where humid and dusty atmosphere
- where ambient temperature becomes 0 deg. C or below.
- where exposed to rain and wind

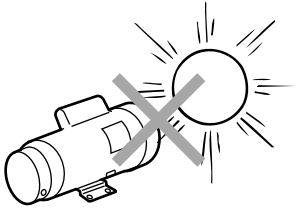

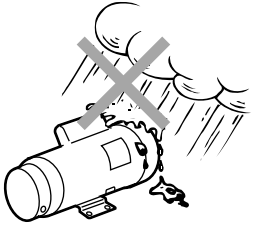

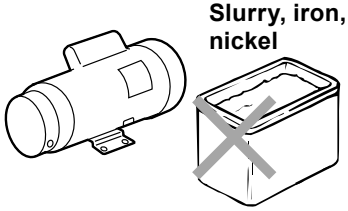

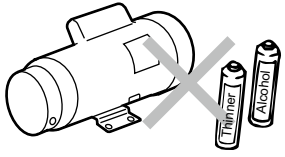

(8) **Ground**
Connect ground from ground terminal of terminal box.

(9) **Prohibited liquids**
Following liquids can not be pumped.
- liquids which contain iron or nickel powder
- liquids which contain slurry
- liquids which are crystallized when stopping
- flammable liquids such as gasoline or kerosene

(10) **Power cord can not be replaced.**
Do not use pump of which the power cord is damaged.

(11) **Maintenance and cleaning**
Do not use solvents such as benzene, alcohol or thinner to clean pump. Otherwise, paint gets discolored or peeled.

3. Installation, piping and wiring

3-1. Installation

1) Place to be installed
Install the pump at the place where ambient temperature is 40 deg. C or below, relative humidity is 85% or below and where the maintenance and inspection works can be done easily. Do not install pump outdoor.

2) Install the pump the lower position than liquid level of suction tank (Flooded suction piping). When it is unavoidable that the pump is installed at the place where its suction port is higher than the liquid level of suction tank (Suction lift piping), install the pump referring to the pictures on right. In this case, the pump can not suck up the liquid if the pump chamber is not wet. (MDG-R15K and C types can not be used for suction lift piping.)

[Flooded suction]

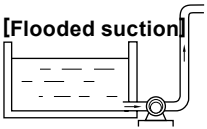

[Suction lift] In case pump chamber is wet.

①In case of no liquid in suction piping. (Only T and P types are possibly used.)

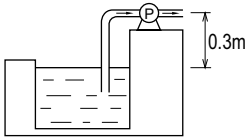

②In case liquid is filled in suction piping.

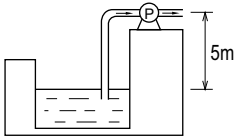

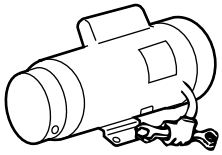

3) Fix baseplate
Fix the baseplate with screws M6. If the noise is large because of resonance of mounting floor, mount the pump via rubber cushion. Mount the pump in horizontal position.

Side view of hose

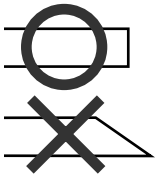

4) Preparation of hose
Before installation works, prepare the hose of which the end is cut as shown on left.

3-2. Piping

1) To minimize the pipe resistance of liquid, use the piping as short and as less bends as possible.

Installation

2) Connect joints to the suction and discharge ports of pump. Apply seal tape so that the air can not be sucked in. Above all improper connection of suction side joint will cause air being sucked resulting in fallen pump performance.

3) Use correct size of hose to ensure firm connection.
Use the hose of which the material can chemically resist to the pumped liquid.
When PVC hose used, use one which can endure the pressure made by the pump.

⚠ Caution

Suction side hose may be collapsed due to vacuum made by pump operation. When hose is used, employ the endurable one such as blade hose. Special attention must be paid when pumping high temperature liquid.

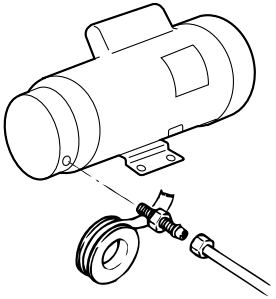

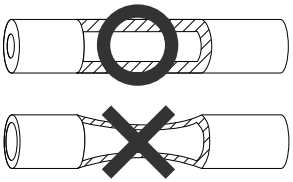

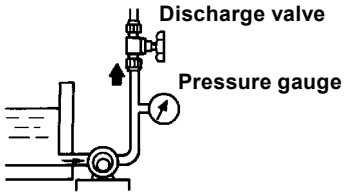

4) When you screw the joints in suction and discharge ports, hold the pump head with hand but do not hold the motor. Tightening torque is 15N·m or less.

5) If a pressure gauge is installed at discharge piping, you can find the abnormal operation of pump when it happens.

6) Periodically check the piping if it is not loosened and tighten it if loosened.

3-3. Wiring

⚠ CAUTION

Electrical and wiring works must be done by qualified electrician. Otherwise accident of injury or damage may happen.

1) Before wiring is done, check if the main power source is switched off.

2) Use the power of pump which is indicated on the nameplate of pump.

3) The pump has no ON/OFF switch. The pump starts running as soon as the power cord is connected to the power source.

4) Take the ground.

5) In case the earth leakage breaker is installed and when it is operated, reset it after the reason is settled. Switch off the power when you check the reason.

■ Rated current, starting current

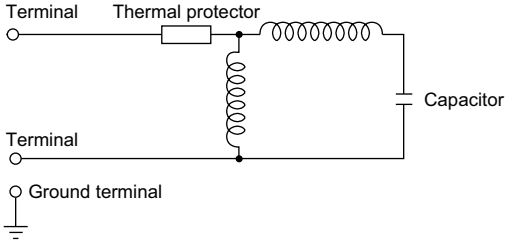

50/60Hz

Model	Voltage (V)	Rated current (A)	Starting current (A)
MDG-R15 ( ) 220	220-240	1.4/1.5	3.55/3.2

Operation

1. Operation

Operate the pump according to following procedure.

⚠ Caution

Never run pump dry (without liquid) or run pump with suction and/or discharge valve closed. Otherwise, pump is damaged.

No.	Procedure	Description
1	Check piping, wiring and power voltage.	• Check piping, wiring according to items “Piping” and “Wiring” in Installation section. • Check power voltage according to description on nameplate.
2	Open valves	• Fully open the valves on suction and discharge pipings.
3	Check if liquid is filled in pump chamber.	• In case of suction lift application, prime liquid sufficiently.
4	Switch on power to start	• After above procedures, switch on power and check if pump runs normally. If pump does not discharge liquid, stop it immediately and eliminate the cause referring to item “Troubleshooting”.
5	Operation	• Adjust valves gradually to get required flow rate, pressure or vacuum. • Rapid open and close of valves will cause disconnection of magnetic coupling. If this happened, switch off power to stop motor. Magnetic coupling will recover once the motor stops its rotation. • Do not operate pump with discharge and suction side valves fully or almost fully closed.
6	Precaution during pump operation	• Do not get foreign matters into pump. Foreign matter in pump will cause locked gears or abnormal wear of gears. • If earth leakage breaker operates, reset it after the cause is eliminated. Switch off the power and check the reason referring to item “Troubleshooting”.

2. Stopping

No.	Stopping procedure	Description
1	Switch off power. (Check stopping condition)	• When power is switched off, check if motor stops smoothly. If motor does not stop smoothly, you should inspect pump.
2	Close discharge side valve.	• Close discharge side valve gradually. Do not close it rapidly.

Precautions when pump is not used for a long period

When pump is not used for a long time, remove the liquid inside pump. Run the pump for five minutes once three months to circulate water to prevent rust from motor bearing.

Maintenance

1. Troubleshooting

Trouble	Cause	Countermeasures
Motor stops during operation.	• Wrong wiring • Thermal protector operates due to over loaded motor. • Earth leakage breaker operates due to short circuit.	• Check and correct wiring. • Reduce viscosity of liquid or discharge pressure. • Check and repair or replace.
Pump does not discharge liquid or capacity is low.	• No liquid at suction side and pump runs dry. • Air is sucked in from suction side. • Suction side hose is collapsed. • Pressure at suction port is below saturated vapor pressure of pumped liquid. • Viscosity of liquid is too high. • Valve is closed. • Too large pipe resistance. • Worn gear	• Fill liquid in suction tank or open suction side valve. • Check suction side piping and correct it. • Replace hose by stronger one. • Decrease liquid temperature or pipe resistance of suction piping. • Decrease liquid viscosity. • Open valve. • Correct piping. • Replace gear.
Magnet coupling is disconnected.	• No liquid at suction side and pump runs dry. • Gears are locked by their swelling. • Gears are locked by their expansion by heat. • Foreign matters adhere to gears. • Damaged gears. • Magnet capsule touches rear casing. • Valve is fully closed. • Too large pipe resistance. • Wrong pump is used in view of chemical resistibility.	• Fill liquid in suction tank or open suction side valve. • Check chemical resistibility of gears. • Bring down liquid temperature. • Disassemble pump and remove foreign matters. • Replace gears. • Disassemble pump and repair or replace parts. • Open valve. • Correct piping. • Select suitable pump.

Trouble	Cause	Countermeasures
Motor does not start.	• Power is not switched on. • Wrong or disconnected wiring. • Failed motor or its winding is disconnected. • Earth leakage breaker operates due to short circuit. • Earth leakage breaker operates due to lack of power capacity.	• Switch on power. • Check and correct wiring. • Repair or replace motor. • Check and repair or replace. • Employ larger power capacity.
Abnormal noise or vibration	• No liquid at suction side and pump runs dry. • Foreign matters on gears. • Damaged gear. • Magnet capsule touches rear casing. • Worn gear.	• Fill liquid or open valve of suction side. • Disassemble pump and remove foreign matters. • Replace gear. • Disassemble pump and repair or replace parts. • Replace gear.
Liquid leaks.	• Damaged O ring. • Loosened bolts. • Wrong pump is selected in view of chemical resistibility.	• Replace O ring. • Tighten bolts. • Use suitable pump.
Pump does not self-prime.	• No liquid at suction side and pump runs dry. • Air is sucked in from suction side. • Collapsed suction side hose. • Pump inside is dry. • Pressure at suction port is below saturated vapor pressure of pumped liquid. • Worn gear. • Too high suction lift.	• Fill liquid in suction tank or open valve at suction side. • Check suction side piping and correct. • Replace by stronger hose. • Fill liquid from suction or discharge port. • Bring down liquid temperature or pipe resistance. • Replace gear. • Lower suction lift height.

Maintenance

2. Maintenance and inspection

No.	Check item	Description	Method
1	If pump discharge liquid normally.	• If liquid is normally transferred. • If suction and discharge pressure is normal.	• Flow meter or by eye. • Refer to figures shown on name plate.
2	If sound and vibration are normal.	• Abnormal sound or vibration may be generated when pump does not operate normally. • Resonance of base to which pump is mounted may enlarge vibration. In this case, take countermeasure such as rubber cushion etc.	• By eye and year. • By eye and year.
3	If liquid does not leaks or air does not sucked from pump or piping.	• Tighten bolts of the parts from which liquid leaks. • When you see bubbles in discharged liquid, air is sucked in. Check piping and tighten relating bolts.	• By eye.
4	If pump or motor surface is not extremely hot.	• Surface temperature of pump body is same as that of pumped liquid. • Surface temperature of motor is within ambient temperature plus approx. 40 deg. C. You may not touch motor but it is not abnormal if it is within this temperature.	• By touching or thermometer.

3. Spare parts

If the pump is continuously operated for a long time, it is needed that the consumable parts are replaced at proper time. It is recommended you always keep the consumable parts shown as bellow.

No. (Note 1)	Parts		Q'ty	Time to be replaced (Note 2)
13	Drive gear	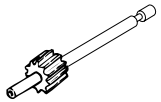	1	MDG-R15T&K types … 3,000 hours MDG-R15P&C types … 5,000 hours
11	Driven gear	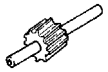	1	
10	Bearing		6	
3	O ring		1	To be replaced at the time of maintenance works are done.

Note 1: Number corresponds to that of exploded view and drawing.
2: Time to be replaced is the time that the flow rate goes down by 20% compared to original flow rate when pumping clear water at ambient temperature at pressure of 0.2MPa.

4. Disassembly and assembly

4-1. Disassembly (Parts No. relates to the construction drawing and exploded view.)

1) Remove four pan-head screws (15) to remove pump head from motor (1).

2) Remove six pan-head screws (16) to remove mounting plate (4), rear casing (6) and O ring (3).

3) Loosen hex. socket head screw (5) with hex. wrench (Nominal 2.5) and pull out a magnet capsule (7) from the shaft of drive gear (13). Take care iron powder can not be attracted to the magnet capsule.

4) Remove four pan-head screws (17) and disassemble the pump in order of baring holder (9), gear case (12), two parallel pins (19), drive gear (13) and driven gear (11). Pay attention not to harm the parts when the pump is disassembled.

4-2. Replacement of bearings

4-2a For models MDG-R15T and K (equipped with GFRPTFE bearings)

1) Pull out six bearings(10) which are inserted in pump body (14) and bearing holder (9). Screw M8 bolt by approx. 5mm into worn bearing to pull it out together with bolt.

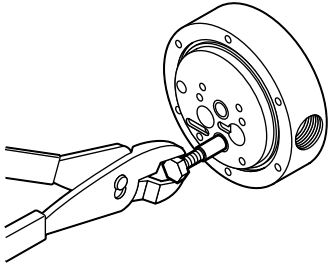

Pull out bearing from pump body

2) Put the slits of bearing (10) to the direction of line which connects the centers of two bearing holes, and insert it into the bearing hole of pump body (14) and bearing holder (9). End of bearing is located by 0.5mm lower than end surface of pump body (14) and bearing holder (9). Put the bearing carefully into the bearing hole so that it comes in straight along with the bearing hole. Total six bearings are inserted.

3) Insert the bearings to both sides of bearing holder (9).

4) After the six new bearings (10) are inserted, adjust their inner diameter by putting the hand reamer of 7.15mm diameter into the bearings. Prepare two types of hand reamer, that is, the one is standard and another is that of which end is not tapered. First put the standard reamer by turning it by fingers, and then put not tapered one to finish. (If you wish jigs, ask our dealer.)

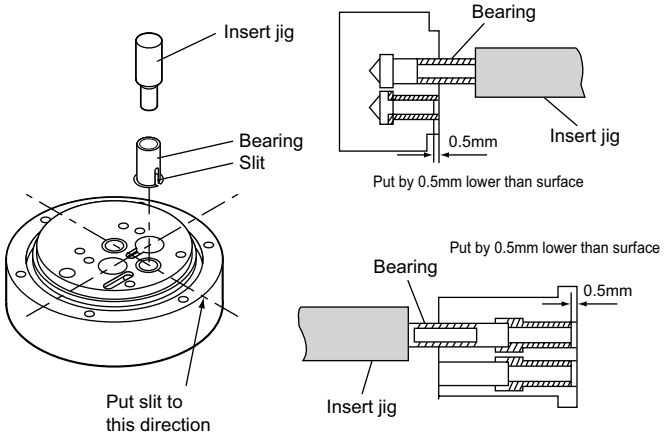

4-2b For models of models MDG-R15P and C (equipped with PPS bearings)

1) l out two bearings (10) which are inserted into pump body (14). Screw in by 15mm depth a screw (Nominal 8mm dia. x 25mm length) into worn bearing and pull it out together with the screw.

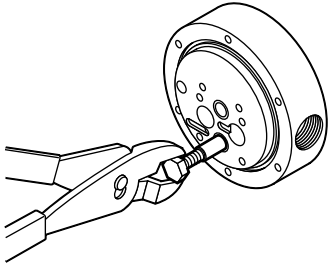

Pull out bearing from pump body

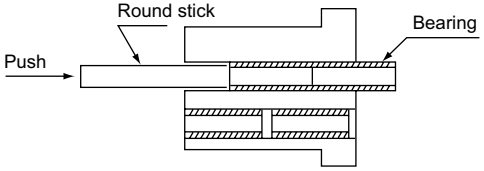

Pull out bearing from bearing holder

2) Pull out four bearings (10) which are inserted in bearing holder (9). Fixing the bearing holder (9), push the bearing with a round stick of 9.5mm dia. to push out the worn bearing.

3) Insert the bearings (10) into the bearing holes of bearing holder (9) and pump body (14). Put the bearing end by 0.5mm lower than the end of bearing holder (9) and pump body (14). Put the bearing carefully into the bearing hole so that it comes in straight along with the bearing hole. Total six bearings are inserted. (If you wish insert jig, ask your dealer.)

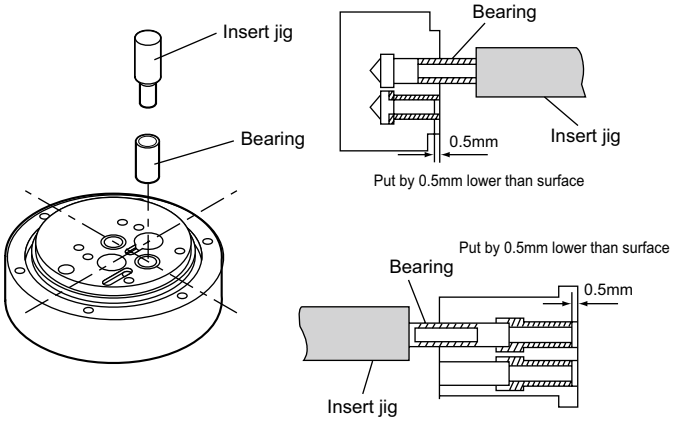

4-3. Assembly

1) Mount drive gear (13) and driven gear (11) on pump body (14).

2) Putt two parallel pins (19) on pump body (14). Put the gear case (12) and bearing holder (9) on it and tighten and fix it with four pan-head screws (17) and four spring washers (18). (Tightening torque is 1.76N·m.)

3) Insert magnet capsule (7) into shaft of drive gear (13) and fix it with hex. socket head screw (5). Keep 0.5mm distance between magnet capsule (7) and bearing holder (9). (Tightening torque is 3.43N·m.)

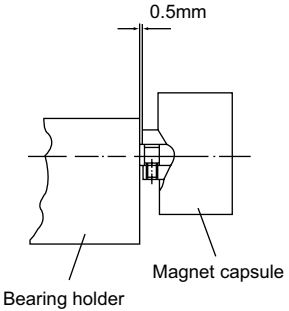

4) Insert O ring (3) into pump body (14).

5) Mount rear casing (6) and mounting plate (4) on the pump body so far assembled and fix them with six pan head screw and spring washer (16). Face the chamfered side of mounting plate to the pump body. (Tightening torque is 1.76N·m.)

Mount the assembled pump body to motor (1) with four pan-head screws (15). Pay attention for your fingers not to be pinched by strong magnets used. (Tightening torque is 2.95N·m.)

● **Exploded view**

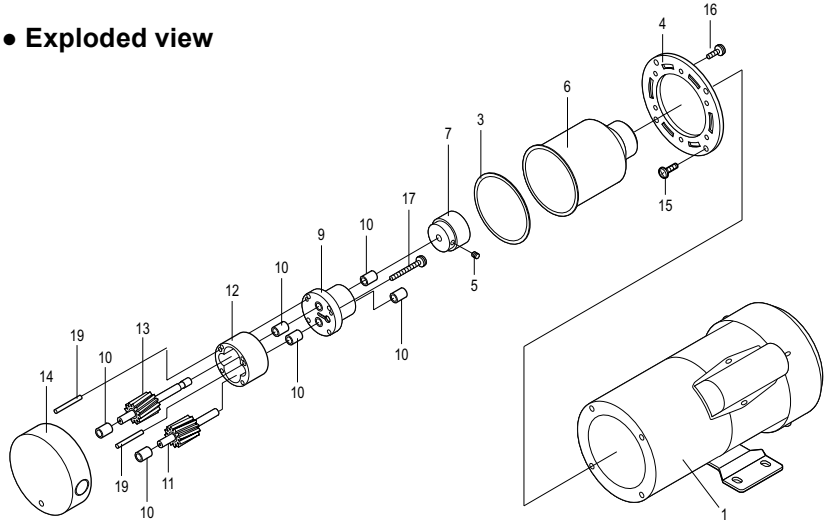

■ Assembly of the motor to the pump

If a customer mounts the pump and the motor bracket to the motor, follow the instructions below.

⚠CAUTION

- Be sure to turn off power to stop the motor and related devices before work.
- Before the motor bracket is mounted to the motor, make sure that the motor size is correct.
- To avoid personal injury, do not place the drive magnet unit near any metal part or tool.

1. Mount the motor bracket to the motor and tighten them up with the screws.

2. Do not allow foreign matters such as iron pieces to stick to the magnet capsule unit. Slide the drive magnet unit onto the motor shaft straight without excessive force. Check the distance between the end faces of the drive magnet and the bracket is 75mm (see the figure below) and secure them with the set screw and the Loctite #222.

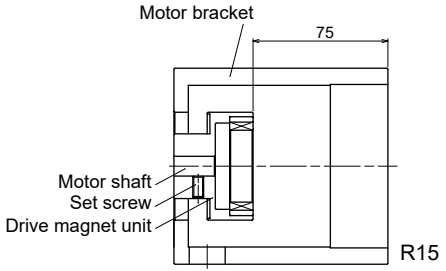

3. Mount the pump to the motor bracket and secure them by 2.95N·m with the four M5×10 screws. Magnetic force of the pump is strong. Be careful not to catch the finger in parts. See the arrow mark on the pump head for the correct direction of the liquid flow.

Maintenance

5. Construction and parts names

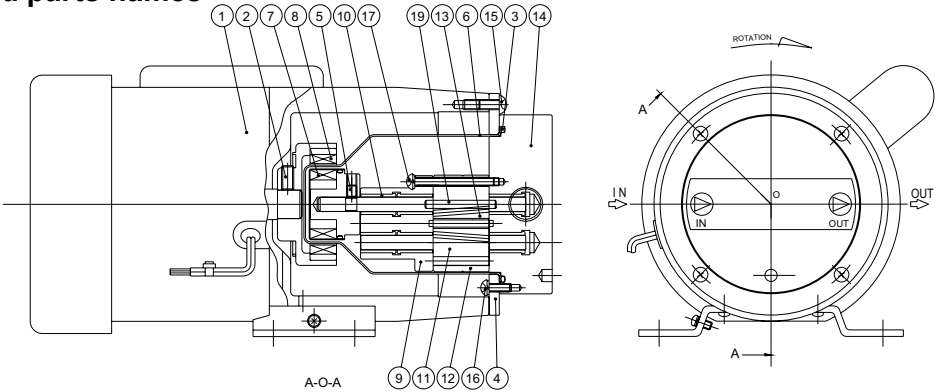

No	Parts name	Mat'l	Q'ty	Remarks
1	Motor		1	
2	Hex.socket head screw	SNCM	1	M6 × 12
3	O ring	FKM	1	
4	Mounting plate	Iron	1	
5	Hex. socket head screw	s.s.	1	M5 × 6
6	Rear casing	SUS316	1	
7	Magnet capsule	SUS316, FKM, Nd magnet	1	
8	Drive magnet unit	ADC, Nd magnet	1	
9	Bearing holder	SUS316	1	
10	Bearing	GFRPTFE	6	R15T/K
10	Bearing	(CF+PTFE) PPS	6	R15P/C

No	Parts name	Mat'l	Q'ty	Remarks
11	Driven gear	PTFE, SUS316	1	R15T/K
11	Driven gear	PEEK, SUS316	1	R15P/C
12	Gear case	SUS316	1	
13	Drive gear	PTFE, SUS316	1	R15T/K
13	Drive gear	PEEK, SUS316	1	R15P/C
14	Pump body	SUS316	1	
15	Cross rec. head screw	s.s.	4	M5 × 10
16	Cross rec. head screw	s.s.	6	M4 × 12 with s.w.
17	Cross rec. head screw	s.s.	4	M4 × 45 with S.W.
19	Parallel pin	SUS316	2	

EC DECLARATION OF CONFORMITY

A copy of the original Declaration of Conformity

(SUPPLIER'S NAME)
WE
IWAKI CO.,LTD.

(ADDRESS)
6-6 2-CHOME KANDA-SUDACHO CHIYODA-KU TOKYO JAPAN

(PRODUCT)
DECLARE UNDER OUR SOLE RESPONSIBILITY THAT THE PRODUCTS
MAGNETIC DRIVE GEAR PUMP

(MODEL NAME)
MDG SERIES

TO WHICH THIS DECLARATION RELATES ARE IN CONFORMITY
WITH THE FOLLOWING STANDARDS OR DIRECTIVES AS FAR AS APPLICABLE

(DIRECTIVES)
MACHINERY DIRECTIVE 2006/42/EC (ANNEX IIA)
RoHS DIRECTIVE 2011/65/EU

NOTE: THIS PRODUCT IS INTENDED FOR FITTING INTO ANOTHER MACHINE OR INSTALLATION. CONFORMITY WITH THE DIRECTIVE 2014/30/EU SHOULD BE ESTABLISHED BY THE END PRODUCT.

(STANDARDS)
EN ISO12100:2010 EN809:1998+A1:2009 EN IEC63000:2018

(A PERSON WHO IS AUTHORISED TO COMPILE THE TECHNICAL FILE IN THE COMMUNITY)
IWAKI EUROPE GMBH
SIEMENSRING 115 D-47877 WILLICH GERMANY

NOTE: THIS DECLARATION BECOMES INVALID IF TECHNICAL OR OPERATIONAL MODIFICATIONS ARE INTRODUCED WITHOUT THE MANUFACTURER'S CONSENT.

T. Sawada.

TSUTOMU SAWADA
SENIOR GENERAL MANAGER,
QUALITY ASSURANCE HEAD OFFICE

Tokyo, Dec. 18, 2023

(PLACE AND DATE OF ISSUE) (NAME AND SIGNATURE OR EQUIVALENT MARKING OF AUTHORIZED PERSON)

DOCUMENT NO. IS-51K-527-4

CE conformity

■ Information on CE conformity of pump units when the motor is fitted by the customer (dealer/operator)

We hereby confirm the CE conformity of our pump unit provided that the following criteria about intended use are satisfied as described in this instruction manual:

- Motor conformity in accordance with any relevant EC directives which are currently effective.
- The dimensions of a required motor flange and shaft must fit the specified pump.
- The motor must be installed to the pump according to this instruction manual.
- Guaranteed grounding
- The pump must not be repainted over our original upper coating.

Any reseller or dealer who connects the pump with a motor and markets it as a complete unit must conform to all relevant EC directives. In such cases, the reseller or dealer then becomes the manufacturer.

Waste Electrical and Electronic Equipment (WEEE)



In accordance with the European Directive 2012/19/EU on waste electrical and electronic equipment, this product features the crossed-out wheelie bin symbol. When this product is disposed of in household wastes, toxic components included in it can cause major environmental and human health problems. Use appropriate waste collection systems for recovery and recycling. Contact your local distributor or nearest Iwaki company for the detailed collection systems.

https://www.iwakipumps.jp
IWAKI CO.,LTD. 6-6 Kanda-Sudacho 2-chome Chiyoda-ku Tokyo 101-8558 Japan
TEL: +81 3 3254 2935 FAX: +81 3 3252 8892

European Headquarter / IWAKI Europe GmbH
TEL: +49 2154 9254 0 FAX: +49 2154 9254 48
Germany / IWAKI Europe GmbH
TEL: +49 2154 9254 50 FAX: +49 2154 9254 55
The Netherlands / IWAKI Europe GmbH (Netherlands Branch)
TEL: +31 74 2420011 FAX: +49 2154 9254 48
Italy / IWAKI Europe GmbH (Italy Branch)
TEL: +39 0445 561219 FAX: +39 0445 569088
Spain / IWAKI Europe GmbH (Spain Branch)
TEL/FAX: +34 934 741 638
Poland / IWAKI Europe GmbH (East Europe Branch)
TEL: +48 12 347 0755 FAX: +48 12 347 0900
Denmark / IWAKI Nordic A/S
TEL: +45 48 242345
Finland / IWAKI Suomi Oy
TEL: +358 10 201 0490
Norway / IWAKI Norge AS
TEL: +47 23 38 49 00
Sweden / IWAKI Sverige AB
TEL: +46 8 511 72900
Belgium / IWAKI Belgium N.V.
TEL: +32 13 670200 FAX: +32 13 672030
France / IWAKI France S.A.
TEL: +33 1 69 63 33 70 FAX: +33 1 64 49 92 73
U.S.A. / IWAKI America Inc.
TEL: +1 508 429 1440 FAX: +1 508 429 1386
Brazil / IWAKI Do Brasil Comercio De Bombas Hidraulicas LTDA.
TEL/FAX: +55 19 3244 5900
China (Shanghai) / IWAKI Pumps (Shanghai) Co., Ltd.
TEL: +86 21 6272 7502 FAX: +86 21 6272 6929
China (Hong Kong) / IWAKI Pumps Co., Ltd.
TEL: +852 2607 1168 FAX: +852 2607 1000
China (Guangzhou) / GFTZ IWAKI Engineering & Trading Co., Ltd.
TEL: +86 20 84350603 FAX: +86 20 84359181
China (Shenzhen) / IWAKI Pumps (Shenzhen) Co., Ltd.
TEL: +86 0755 8656 3696
Singapore / IWAKI Singapore Pte Ltd.
TEL: +65 6316 2028 FAX: +65 6316 3221
Indonesia / IWAKI Singapore Pte Ltd. (Indonesia Office)
TEL: +62 21 6906606 FAX: +62 21 6906612
Malaysia / IWAKIm SDN. BHD.
TEL: +60 3 7803 8807 FAX: +60 3 7803 4800
Korea / IWAKI Korea Co., Ltd.
TEL: +82 2 6238 4800 FAX: +82 2 6238 4801
Taiwan / IWAKI Pumps Taiwan Co., Ltd.
TEL: +886 2 8227 6900 FAX: +886 2 8227 6818
Thailand / IWAKI (Thailand) Co., Ltd.
TEL: +66 2 322 2471 FAX: +66 2 322 2477
Australia / IWAKI Pumps Australia Pty Ltd.
TEL: +61 2 9899 2411 FAX: +61 2 9899 2421

T1036-3 '26/09