IWAKI PUMPS

IWAKI
Magnetic Drive Gear Pump

MDG-R2 (Built-in EMC Conformity)

Instruction Manual

⚠ Read this manual before use of product

Thank you for having selected the Iwaki Magnetic Gear Pump Model MDG-R2. This manual deals with the correct handling and operation procedures and troubleshooting methods for the pump. To make maximum use of the pump and to ensure safe, long operation, please read this manual carefully prior to operating the pump. Pay special attention to the "Warning" and "Caution" sections as they relate to matters of safety and proper usage of the pump. This instruction manual should be kept on hand by the end user for quick reference.

Contents

Chapter		Page
1.	Safety Instruction	1, 2
2.	Inspection and Unpacking	3
3.	Principle of Operation	3
4.	Pump Identification Codes	4
5.	External Dimensions	5
6.	Standard Performance Curve	6
7.	Descriptions of Parts	7
8.	Name of Parts	8
9.	Handling Instructions	10
10.	Installation, Piping, and Wiring	12
11.	Operation	16
12.	Causes of Trouble and Troubleshooting	20
13.	Maintenance and Inspection	21
EC DECLARATION OF CONFORMITY		27
CE conformity		27
Waste Electrical and Electronic Equipment (WEEE)		27

Important Instruction

For the Safe and Correct Handling of the Pump

- "Safety Instruction" section deals with important details about handling of the product. Before use, read this section carefully for the prevention of personal injury or property damage.
- Observe the instructions accompanied with "WARNING" or "CAUTION" in this manual. These instructions are very important for protecting pump users from dangerous situations.
- The symbols on this instruction manual have the following meanings:

⚠ **WARNING**	**Nonobservance or misapplication of the contents of "Warning" section could lead to a serious accident which may result in death.**
⚠ **CAUTION**	**Nonobservance or misapplication of the contents of "Caution" section could lead to personal injury or property damage.**

Types of Symbols

	Indicates a prohibited action or procedure. Inside or near this circle, a concrete and practical image of the activity to be avoided is depicted.
	Indicates an important action or procedure which must be performed or carried out without fail. Failure to follow the instructions herein can lead to malfunction or damage to the pump.

⚠ Export Restrictions

Technical information contained in this instruction manual might be treated as controlled technology in your countries, due to agreements in international regime for export control.
Please be reminded that export license/permission could be required when this manual is provided, due to export control regulations of your country.

1. Safety Instruction

⚠ Warning

- **Turn off power before service**
  Risk of electrical shock. Be sure to turn off power to stop the pump and related devices before service is performed.


Electrical Shock

- **Stop operation**
  If you notice any abnormal or dangerous conditions, suspend operation immediately and inspect/solve problems.



- **Do not use the pump in any condition other than its intended purpose**
  The use of the pump in any conditions other than those clearly specified may result in failure or injury. Use this product in specified conditions only.


Prohibited

- **Do not modify the pump**
  Alterations to the pump carry a high degree of risk. It is not the manufacturer's responsibility for any failure or injury resulting from alterations to the pump.


No Remodeling

- **Wear protective clothing**
  Always wear protective clothing such as an eye protection, chemical resistant gloves, a mask and a face shield during disassembly, assembly or maintenance work.


Wear protective gear

⚠ Caution

- **Qualified personnel only**
  The pump should be handled or operated by qualified personnel with a full understanding of the pump. Any person not familiar with the product should not take part in the operation or maintenance of the pump.


Prohibited

- **Use specified power only**
  Do not apply power other than that specified on the nameplate. Otherwise, failure or fire may result. Ensure the pump is properly grounded.


Prohibited

- **Do not touch the pump or pipe with bare hands**
  Risk of burns. The surface temperature of the pump or piping becomes very high during and immediately after operation, depending on the liquid temperature.


Caution

- **Keep electric parts and wiring dry**
  Risk of fire or electric shock. Install the pump where it can be kept dry.


Prohibited

- **Ventilation**
  Fumes or vapours can be hazardous with certain solutions. Ensure proper ventilation at the operation site.


Caution

- **Spill precautions**
  Ensure protection and containment of solution in the event of plumbing or pump damage (secondary containment).


Prohibited

- **Do not use a damaged pump**
  Use of a damaged pump could lead to an electric shock or death.


Electrical Shock

⚠ Caution

- **Do not use the pump in a wet location**
  The pump is not waterproof. Use of the pump in wet or extremely humid locations could lead to electric shock or short circuit.


Prohibited

- **Do not damage the power cable**
  Do not pull, knot, or crush the power cable. Damage to the power cable could lead to a fire or electrical shock if cut or broken.


Caution

- **Do not cover the pump with a cloth**
  Covering the pump may cause heat to build up in the motor, resulting in fire or electrical/mechanical failure.



- **Grounding**
  Risk of electrical shock! Always properly ground the pump. Conform to local electrical codes.


Grounding

- **Install a GFCI (earth leakage breaker)**
  An electrical failure of the pump may adversely affect other devices on the same line. Purchase and install a GFCI (earth leakage breaker) separately.


Electrical Shock

- **Preventative maintenance**
  Follow instructions in this manual for replacement of wear parts. Do not disassemble the pump beyond the extent of the instructions.



⚠ Caution

- **Do not install/store the pump:**
  - In a flammable/explosive/corrosive atmosphere.
  - In a dusty/humid environment.
  - Where ambient temperature can exceed 0-40ºC.
  - In direct sunlight or wind & rain.


Prohibited

- **Use of hazardous chemicals**
  Risk of personal injury or fire. Check the piping system for leaks before and during operation when handling flammable, corrosive, or hazardous liquids.


Caution

- **Do not drain liquid onto the floor**
  The liquid discharged from the pump must be drained into a special container. Never drain it directly onto the floor.


Prohibited

- **Disposal of a used pump**
  Dispose of any used or damaged pump in accordance with local rules and regulations. See the last page of the manual to comply with the European Directive 2012/19/EU on waste electrical and electronic equipment.



- **Static electricity**
  When low electric conductivity liquids such as ultra-pure water and fluor inactive liquid (e.g. Fluorinert™) are handled, static electricity may generate in the pump and may cause static discharge. Take countermeasures to remove static electricity.



2. Inspection and Unpacking

For safe use and correct handling of the pump, confirm the application purpose and performance limits of the pump as well as the dangerous aspects of the operation before using the pump.

[1] Do the model of the pump, discharge capacity, discharge pressure, voltage, and other items marked on the nameplate represent what you ordered?

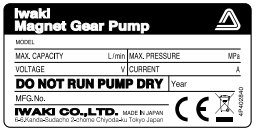

Spec label (pump with DC motor) for the European market



Spec label (pump without motor) for the European market

*The CE marking on our product(s) is for us to market the product(s) into the European market, however, the CE marking does not ensure any safety or conformity of the product(s) outside the European market.
When the pump is incorporated into the equipment marketed in the European market, such equipment must meet all the requirements of applicable directives.
In such a case, any person who places the equipment on the market must carry a CE mark on the equipment as a manufacturer.

[2] Has the product been damaged or nuts and bolts been loosened during delivery? Please examine visually or by touch.
***Contact your dealer if you have any questions or if you have found any discrepancy in the contents of the delivered package.**

3. Principle of Operation

The Iwaki Magnet Gear Pump comprises a pair of gears driven by a magnet coupling and casing in which the gears are fitted exactly. (Fig. A)

Liquid introduced from the IN side feeds into the grooves between the teeth of the gears and is transferred to the OUT side by rotation of the gears. (Fig. B)

Then, the liquid is forced out of the grooves between the gear teeth in engagement. (Fig. C)

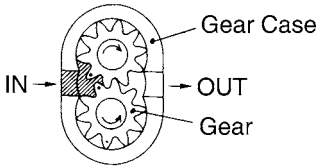

FigA

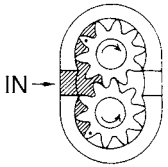

FigB

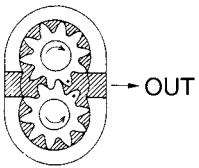

FigC

4. Pump Identification Codes

MDG - R 2 R V A 24 P - 01
(1) (2) (3) (4) (5) (6) (7) (8)

(1) Pump model

(2) Nominal discharge
2: 0.7mL/rev

(3) Liquid temperature
R: 0-50ºC
B: 0-95ºC

(4) Relief valve
No code: without relief valve
V: with relief valve

(5) Connection
A: Rc 1/8
B: 1/8 NPT
C: G 1/4

(6) Line voltage
24: DC24V

(7) Additional features
P: Pulse Width Modulation (PWM control)

(8) Non-standard specification code
01-99: Non-standard
No code: Standard

4-1. Specification

Model	Max. discharge capacity (L/min)	Max. discharge pressure (MPa)	Attainable vacuum (KPa)	Rated speed (min^{-1})	Motor specification		Mass (kg)
					Rated voltage (V)	Rated current (A)	
MDG-R2RV( )24P	1.8	0.3	5.33	2400	DC24	1.2	1.1
MDG-R2B( )24P	1.7						

Note 1. The above performance is based on operation with clean water at 25ºC.
(The max discharge capacity changes depending on the temperature of the liquid used. Further information is available on request.)
2. The max allowable liquid viscosity is 10mPa•s for the pumps with a DC motor.
3. The allowable ambient temperature is 0-40ºC.
4. The MDG-R2( )V pump is equipped with a built-in relief valve.
5. Maximum operating noise is 55dB or below.
(0.5m away from the front of a pump, A scale)

5. External Dimensions

MDG-R2RV( )24P type/ MDG-R2B( )24P type

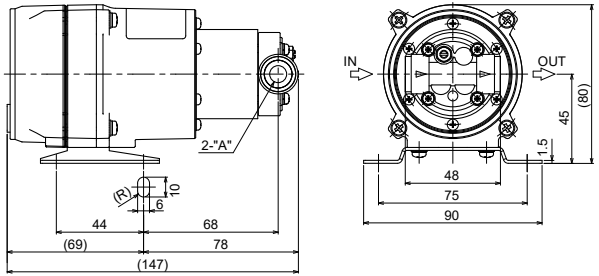

6. Standard Performance Curve

MDG-R2RV( )24P (with DC motor)

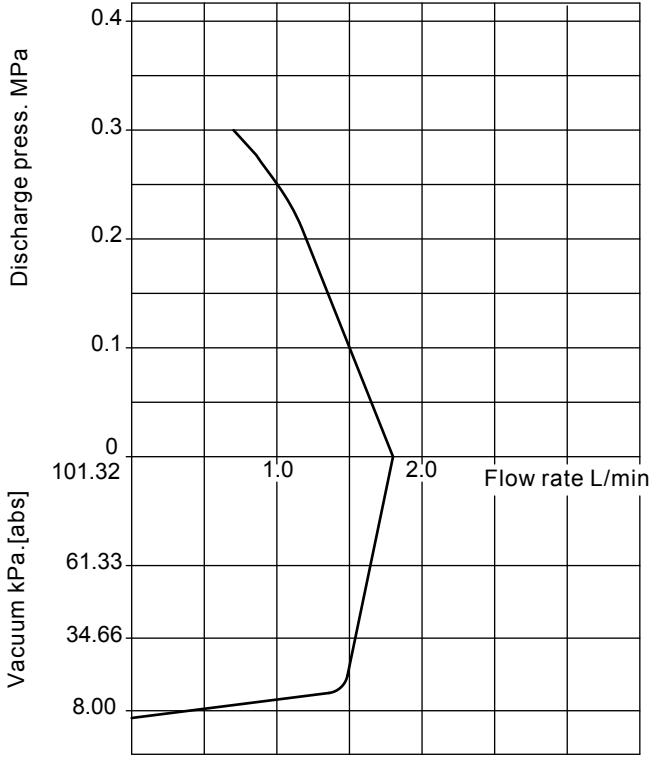

MDG-R2B( )24P (with DC motor)

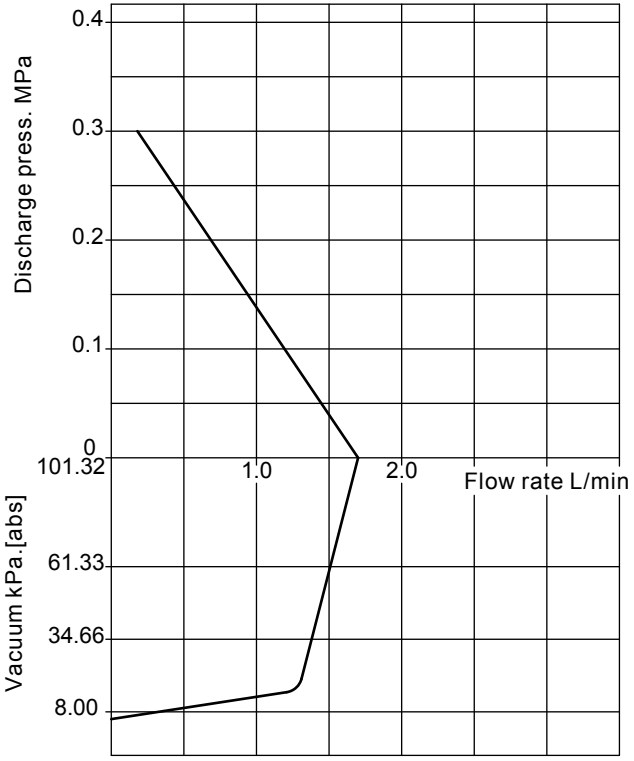

7. Descriptions of Parts

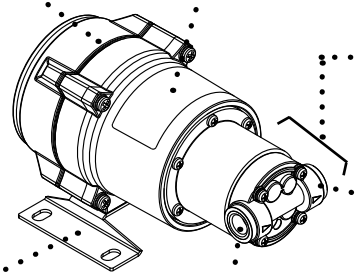

Motor (Driving unit)
Install the motor in a dry place free from water splashes.

"Specifications" label
Use the pump by observing the specifications described on the label.

Pump unit (Liquid circulating unit)
The pump is not self-priming type.
Before operating the pump, be sure to fill the pump with liquid.

Discharge port

Base
Be sure to anchor the base onto the floor.

Suction port

MDG-R2( )V type
Relief valve is built in.
Refer to page 17.

8. Name of Parts

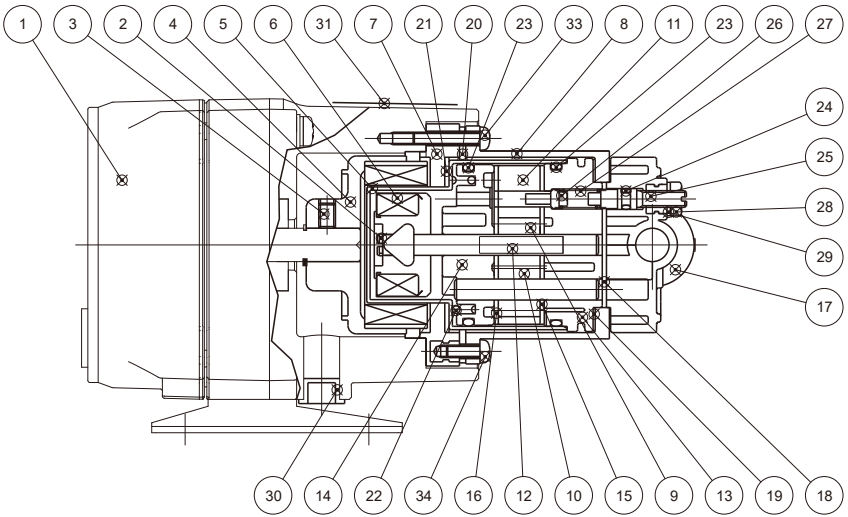

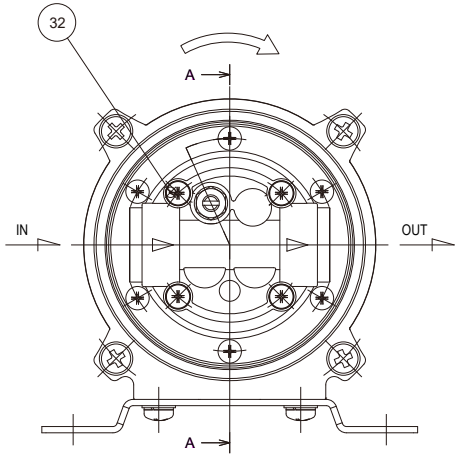

This figure shows MDG-R2( )V type.

- MDG-R2RV( )type
- MDG-R2B( )type

No.	Part names	Q'ty	Material	Remarks
1	Motor	1		
2	Stop Ring	1	SUS316-WPA	
3	Screw	1	SNCM	M4×6
4	Drive Magnet	1	FERRITE, ADC-12	
5	Rear Casing	1	SUS316 or SUS316L	
6	Driven Magnet	1	FERRITE, GFRPPS, SUS316 or SUS316L	
7	Mounting Plate	1	GFRPPS	
8	Bracket	1	SUS304	
9	Drive Gear	1	PPS, SUS316	
10	Driven Gear	1	PPS, SUS316	
11	Gear Case	1	SUS316	
12	Parallel Pin	2	SUS316	
13	Front Bearing	1	(CF+PTFE) PPS	
14	Rear Bearing	1	(CF+PTFE) PPS	
15	Front Plate	1	SUS316	
16	Rear Plate	1	SUS316	
17	Pump Head	1	GFRPPS	
18	Gasket A	1	FKM	
19	Gasket B	1	FKM	
20	Packing B	1	EPDM	

No.	Part names	Q'ty	Material	Remarks
21	Packing C	1	EPDM	
22	Retaining Spring	1	SUS316-WPA	
23	O Ring	2	FKM	S36*
24	O Ring	1	FKM	S3*
25	Adjusting Screw	1	SUS316	*
26	Relief Valve	1	(CF+PTFE) PPS	*
27	Relief Valve Spring	1	SUS316-WPA	*
28	Nut	1	STNLS STL	M4*
29	Plain Washer	1	STNLS STL	M4*
30	Cap	1	PE	G12.2
31	Nameplate	1	PET	
32	Screw	4	STNLS STL	M3×20 SW, PW
33	Screw	3	STNLS STL	M3×16
34	Screw	3	STNLS STL	M3×8

*For MDG-R2( )V type (with Relief valve) only

9 Handling Instructions

■ Handling Instructions

- Handle the pump carefully. A strong impact caused by dropping the pump on the floor, striking it, etc., may result in faulty performance or damage to the pump.
- The pump is not self-priming type. Before operating the pump, be sure to fill the pump with liquid by operating priming.

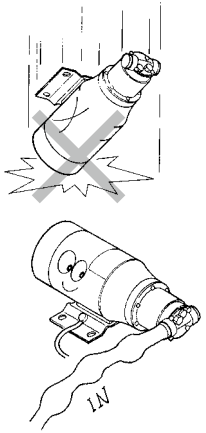

⚠ CAUTION

- Do not operate the pump dry or with the discharge or suction side closed. If this is done, the gears and bearings will be worn out. Particularly, if the pump is operated with the discharge side closed, the discharge pressure will be increased and the relief valve will be activated. This will cause the liquid to circulate in the pump chamber. If this happens the temperature will rise rapidly, causing abnormal wear, seizure, etc., between contacting parts.

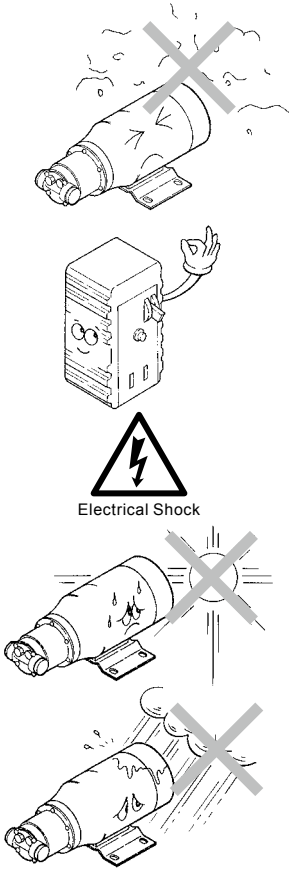

- The pump structure is not designed to be dust-proof or water-proof. Try not to wet or dampen the motor unit.
- For the prevention of electric shock accident, be sure to purchase an optional earth leakage breaker and install it in the system.
- Grounding must be set with the use of a grounding wire. For the prevention of electric shock, it is recommended that an earth leakage breaker also be installed.
- Do not cover the motor unit tightly with a cover, etc. Avoid operating the pump at an ambient temperature above 40°C. The relative humidity should be 90% or below. Do not splash water on the motor. This may cause an electrical short or burning.

- Since there are powerful magnets inside the pump, any liquid containing powder of iron, nickel, etc. cannot be used. Also, the pump cannot be used for the transfer of slurry liquid or liquid which begins to crystallize when stationary.

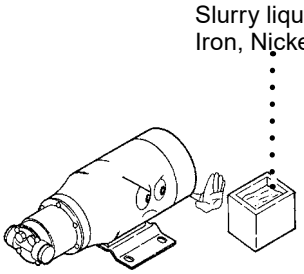

- To ensure safety, do not place any inflammable material or other dangerous substance near the pump.



- The pump motor is not designed to be explosion-proof. Do not operate the pump in the places where filled with or likely to be filled with explosive atmosphere.







- Cleaning of the pump
  Do not use benzine, alcohol, thinner or the like for cleaning the pump. These liquids may cause discolouring or peeling off of the coat.

- Handling of a damaged pump
  Do not operate a damaged pump. A damaged pump causes electricity leakage or electric shock accident.

- Do not touch the pump directly
  The surface temperature of the motor or the pump may be extremely high during system operation.
  Do not touch directly or place any items near the pump which are easily deformed.

10 Installation, Piping and Wiring

⚠CAUTION
When any abnormality or irregularity is noticed, stop the pump immediately and restart it from the first step.

10-1. Installation

(1) Choose a place where ambient temperature will not exceed 40°C and ambient humidity of 90%RH. Allow sufficient space around the pump for easy access and maintenance. Do not install the pump out of outdoors.

(2) Install the pump in a position lower than the surface of the liquid in the tank on the suction side, to prevent dry running (flooded suction method).
If it is necessary to install an *R* type pump in a position in which the inlet of the pump remains higher than the liquid surface (a suction lift), refer to the illustrations on the right. In this position, the pump does not suck unless the pump chamber is wet. (The MDG-R2B type pumps do not function on a suction lift.)

[Flooded suction method]

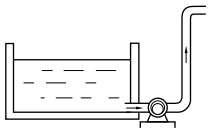

[Priming method]
(In case the pump chamber is wet)

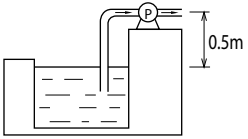

In case there is no liquid in the suction piping.
(This is not allowed for the B type.)

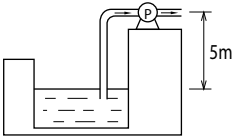

In case there is liquid inside the suction piping.

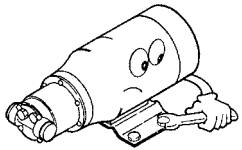

(3) Use M5 machine screws for fitting the pump. If the floor on which the pump is installed is resonant and causes a loud noise, fix the pump with rubber mountings

(Side view of hose)

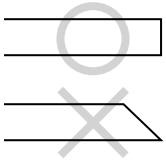

(4) Preparation of hoses
Cut the ends of hoses flat before starting pump installation.

(5) Do not install the pump vertically.
This cause damage of pump.

10-2. Piping

(1) In order to reduce the friction resistance of liquid, the piping should be as short and with as few bends as possible.

(2) The inlet and outlet joints of the pump should be completely sealed with sealing tape, etc., to prevent them from sucking air. If the sealing is incomplete on the suction side, in particular, air is sucked in and the performance of the pump is lowered. Refer to the "Identification Code" for the joint size (connection code).

(3) When screwing the joint to the pump, hold the pump body rather than the motor by hand, to avoid applying excessive force on the motor and pump attachment section. For screwing the joint, the fastening torque shall be 0.5 N•m or lower. Consult us before strong acid or alkaline is used with this pump.

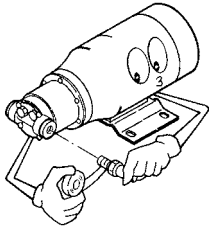

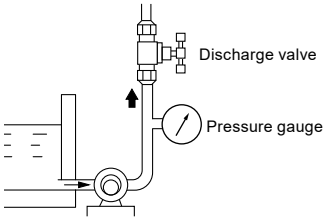

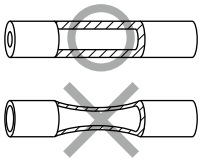

Note the pump inlet and outlet have different female thread lengths. It depends on the joint size of the pump (see page 4.). You can not use a different joint size from the rated size, or a male thread of the joint could damage the female thread if it's too long. See below as well.

Joint size	Female thread lengths
Rc⅛	7mm
⅛NPT	10mm
G¼	10mm

(4) A pressure gauge must be attached on the discharge piping to ease the pressure setting of the relief valve. This attachment also helps in the early detection of pump abnormality.

(5) For connection, use a thick hose which can withstand pump pressure. Since the hose on the suction side, in particular, tends to be crushed by sucking force, the use of a Teflon® hose or something similar is recommended. (When handling hot liquid, special care should be taken.)

10-3. Wiring

The power source handling during wiring work must be done by a licensed electric specialist only. Iwaki will not be responsible for any accident or mechanical damage if such an accident or damage results from the user's failure to observe the instructions above. For more information on wiring by a specialist, contact your dealer.

■ Before wiring

[1] Be sure to confirm before wiring that the main power supply is turned off (power supply is disconnected).

[2] Wiring shall be done in accordance with the local electric work regulations. (Use high-quality wiring elements and carry out wiring in accordance with the technical standards of electrical installation and related interior wiring rules.)

[3] Use the power source voltage indicated on the "Specifications" label.

[4] The pump is not provided with an ON/OFF switch. The pump starts operation when power is supplied by connecting the power cable of the pump with the power source.

[5] Make sure to include a ground wire in the wiring. Select a well-ventilated place for pump installation. The pump must not be allowed to become wet or damp with splashed water.


Electrical Shock

[6] If the pump is installed with an earth leakage breaker and the breaker is activated, eliminate the cause of the breaker activation first, before resetting the condition. When checking the pump for the said cause, be sure to turn off the power supply.

■ Rated Electric Current Value · Starting Current Value

Model of pump	Voltage (V)	Rated current (A)	Starting current (A)
MDG-R2RV( )24P	DC24	1.2	5
MDG-R2B( )24P			

NOTE 1: Fuse
A fuse is installed in the 24 VDC motor. The built-in fuse is intended to minimize the risk of fire and reduce the impact on other equipment in the event of internal circuit damage or other failures.
The built-in fuse is not replaceable. Therefore, if fuse replacement capability is required, install an external fuse. A time-delay (slow-blow) or inrush-current-resistant fuse is recommended.
Recommended external fuse rating: MDG-R2: 6.3 A

NOTE 2: Lock Protection
For the 24P model, a lock protection function is provided. When the motor is locked, the power supply is automatically turned off after 0.5 seconds, and the motor automatically resets and resumes operation 20 seconds later.

NOTE 3: Overcurrent Protection
The drive circuitry is protected against overcurrent.

10-4. Connectors

A 500mm option cable is available.

■ PWM signal

The input signal (−) and speed output signal (−) are common with the power supply negative (−) terminal.

Pin assignment				Receptacle	Applicable connector		Applicable lead wire
1	2	3	4	M. housing	F. housing	Terminal	
Power supply (+)	Power supply (-)	PWM (+)	FG (+)	BH04B-XASK	XAP-04V-1	SXA-001T-P0.6	AWG#22 AWM3266

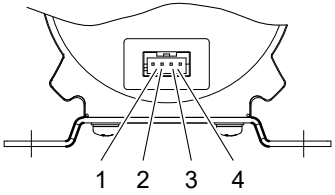

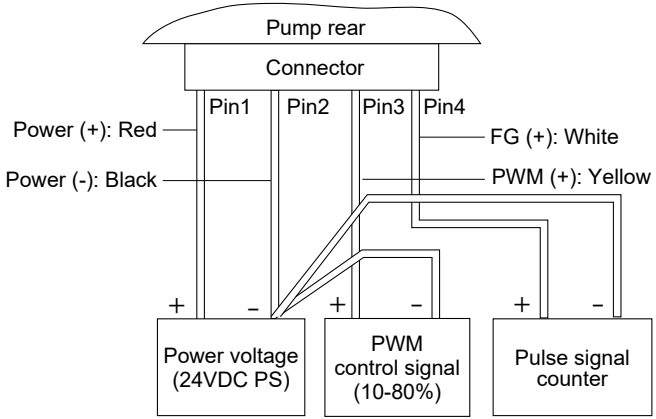

11. Operation

11-1. Operation

After pump installation, piping, and wiring, follow the start-up procedure described below.

⚠ CAUTION

Never operate the pump dry or operate the pump with the discharge and/or suction port closed (with the valve closed). Such an operation damages the pump.

No.	Item	Remarks
1	Confirmation of piping, wiring, and voltage	● Confirm piping and electrical wiring, referring to descriptions in piping and wiring sections. ● Confirm that line voltage is appropriate, referring to nameplate.
2	Confirmation of valves	● Valves on suction side and discharge side should be fully opened.
3	Confirmation of liquid in pump	● When pump is used by priming method, prime pump sufficiently.
4	Starting up	● After confirming items 1-3 above, turn ON pump power supply, then check whether liquid is being fed smoothly. If not, immediately turn off power supply and eliminate cause of problem, referring to "Causes of Trouble and Troubleshooting" section on page 20.
5	Operation	● Adjust valve gradually to obtain specified values of discharge, discharge pressure, or vacuum. ● Do not open/close suction port and discharge port suddenly. This may lead to disconnection of magnet coupling, so that gears cannot rotate. If this happens, turn off power supply. As motor stops, normal coupling will be restored. ● Do not operate pump with discharge valve and/or suction valve completely or almost completely closed. Set operating pressure to at least 0.1MPa lower than set value of relief valve pressure in case of MDG-R2( )V type.
6	During operation	● Be careful not to allow any foreign matter to enter pump. Foreign matter may cause gear locking or abnormal wear of gear. ● If earth leakage breaker is actuated, reset it only after carefully examining cause of actuation. Be sure to turn off power supply before examining cause.

11-2. Relief valve set up

The MDG-R2( )V model is equipped with a built-in relief valve. The pressure set upon shipping is 0.4MPa. The pressure value can be adjusted within the range of approximately 0.3-0.4MPa. Prior to resetting the pressure, please contact us and follow the procedure described below.

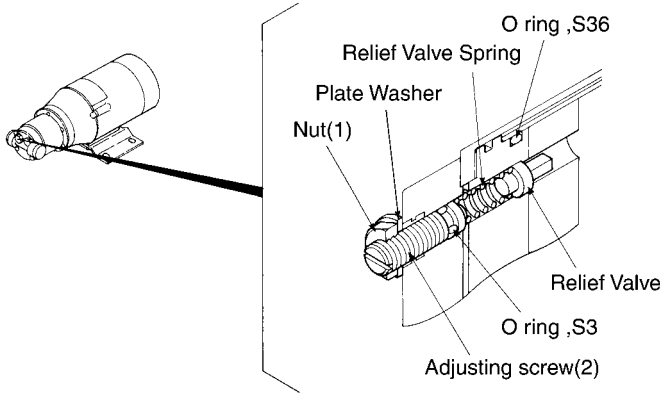

[1] Loosen the clamp nut (1) with a spanner (M4).

[2] Adjust the pressure for the desired value by turning the set pressure adjustment screw (2) with a flat head driver (Watch the pressure gauge installed on the discharge piping in advance for reaching the target value.)

[3] Fasten the clamp nut (1) tightly with the spanner (M4). Be sure to check for liquid leakage after resetting the relief valve.

(Note) The pump performance varies with the relief valve pressure set point.

11-3. PWM operation

■ PWM (Pulse Width Modulation) control

The speed of this pump can be controlled with the PWM control signal, which comes from the NPN bipolar transistor (an open collector output type) or the MOSFET (an open drain output type) of your device such as a PLC (Programmable Logic Controller) to the pump terminal.

If your device uses the NPN bipolar transistor, the Collector-Emitter saturation voltage of the open collector must be 0.5VDC or below.

The pulse width of the PWM signal can be modulated within the 10-80% duty cycle and the 2kHz±10% signal frequency.

- Observe the 2kHz±10% signal frequency, or the motor goes wrong.
- If you wish to establish the feedback control system with this product, you will need an external device with a pulse generator like a flow meter so that the pump will run in proportion to the incoming signal from such a device.

■ PWM and pump speed

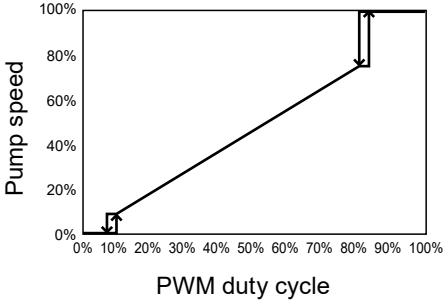

⚠CAUTION

- There is a variety of devices that generates the PWM control signal, and the pump performance could change depending on each device actually used.
- By the nature of the pump is, the less discharge pressure, the more flow rate the pump outputs you will see; however, the pump flow will stop increasing when the discharge pressure comes close to a shut-off pressure, and that's when the over-current protection circuit turns on to protect the motor.
- Also, the optimal duty cycle of the signal to run the pump best could change depending on plumbing, liquid characteristics, and other operating conditions. Additional adjustment will be needed to determine the optimal duty cycle.

■ Motor-driver input circuit

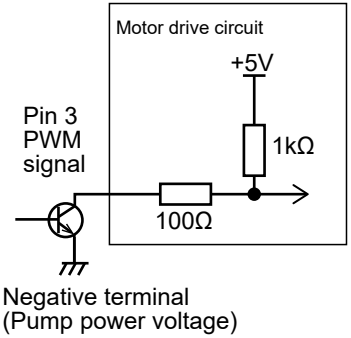

■ Motor-driver output circuit

The pump out transmits the pulse signal in sync with the pump speed (12 pulses per rotation).

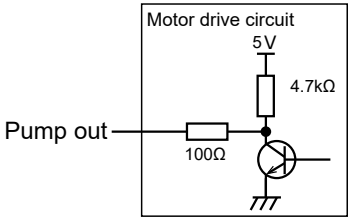

12. Causes of Trouble and Troubleshooting

Problem	Cause	Countermeasure
Motor stops while in operation.	● Wiring contact is bad. ● Thermal protector is activated by overload. ● Earth leakage breaker is activated by leak.	○ Examine and repair defective part. ○ Lower viscosity of liquid or discharge pressure. ○ Examine and repair or replace.
Liquid cannot be pumped up, or capacity is insufficient.	● Dry running without liquid on suction side ● Air enters through suction side. ● Suction port is crushed. ● Pressure in inlet portion is as low as or lower than vapor pressure of the liquid. ● Liquid viscosity is too high. ● Valve is closed. ● Piping resistance is too high. ● Gear is worn out.	○ Supply liquid or open suction side valve. ○ Examine suction side piping and repair. ○ Replace with a new, uncrushable pipe. ○ Lower liquid temperature or piping resistance. ○ Lower viscosity. ○ Open valve. ○ Adjust piping. ○ Replace with new gear.
Magnet coupling disconnects.	● Dry running without liquid on suction side ● Lock due to gear swelled ● Locking due to expanded gear ● Foreign matter sticks to gear ● Gear is damaged. ● Magnet capsule hits rear casing. ● Valve is closed. ● Piping resistance is too high. ● Pump selection on chemical (corrosion) resistance is wrong.	○ Supply liquid or open suction side valve. ○ Select a correct pump material. ○ Lower liquid temperature. ○ Disassemble and remove foreign matter. ○ Replace with new gear case unit. ○ Disassemble and repair or replace parts. ○ Open valve. ○ Adjust piping. ○ Select a correct pump material.

Problem	Cause	Countermeasure
Motor cannot be started.	● Plug is out of socket. ● Contact is bad or there is a break in wiring. ● Motor is malfunctioning, wire in motor is broken. ● Earth leakage breaker is activated by leak. ● Breaker is activated due to lack in power capacity.	○ Insert plug into socket. ○ Examine and repair defective part. ○ Repair or replace. ○ Examine and repair or replace. ○ Increase capacity.
Too much noise or vibration	● Dry running without liquid on suction side ● Foreign matter sticks to gear. ● Gear is damaged. ● Magnet capsule hits rear casing. ● Gear is worn out.	○ Supply liquid or open suction side valve. ○ Disassemble and remove foreign matter. ○ Replace with new gear case unit. ○ Disassemble and repair or replace parts. ○ Replace with new gear.
Liquid leaks.	● O ring is damaged. ● Bolt is loosened. ● Corrosion resistance is unsuitable.	○ Replace with new O ring. ○ Fasten tightly again. ○ Select correct pump material.
Self-priming cannot be made	● Dry running without liquid on suction side ● Air enters through suction side. ● Suction port is crushed. ● Inside of pump is dry. ● Pressure in inlet portion is as low as or lower than vapor pressure of the liquid. ● Gear is worn out. ● Suction height is too high.	○ Supply liquid or open suction side valve. ○ Examine suction side piping and repair. ○ Replace with new, uncrushable pipe. ○ Supply liquid through discharge side or suction side. ○ Lower liquid temperature or piping resistance. ○ Replace with new gear. ○ Lower the suction height.

13. Maintenance and Inspection

Follow the contents of this instruction manual when carrying out the maintenance, inspection, disassembling, and assembling of the pump and/or related components. Never operate the pump out of the ranges specified in this instruction manual. Iwaki will not be responsible for any accident or mechanical damage if such an accident or damage results from the user's failure to observe the instruction above.



Wear protective gear

⚠Wear protectors

When carrying out the maintenance, inspection, disassembling, and assembling of the pump and/or related components, always wear safety gloves, helmet, safety shoes, and the like.

If making access to a wet-end part of the pump in particular, never fail to wear protective goggles, protective headgear, mask, etc., depending on the type of the operation.

■ Maintenance and Inspection

No.	Check Point	Remarks	Check method
1	Is pump lifting liquid properly?	● Whether liquid is being transferred. ● Whether suction and discharge pressures are at normal levels.	● Flow meter or visual check. ● Collation with nameplate.
2	Is there abnormal noise or vibration?	● If pump does not function normally, abnormal noise or vibration tends to be generated. ● Base on which pump is mounted sometimes becomes resonant to increase noise. If separation of pump from the base decreases noise, anti-vibration measure such as attaching anti-vibration rubber mounts to pump should be taken.	● Visual check and hearing check. ● Visual check and hearing check.
3	Is liquid leaking or air being sucked in from joints of pump?	● Clamp connections more tightly. ● If many air bubbles are found in discharged liquid, air is being sucked in. Examine piping and clamp connection more closely.	● Visual check.
4	Is temperature of pump unit surface, motor surface, etc., abnormally high?	● Pump unit surface temperature is same as that of liquid handled. ● Temperature of motor surface is within about 40deg. above ambient temperature. Sometimes it is too hot to touch, but it is normal if temperature is within this range.	● By touch or by thermometer.

■ Spare parts

For a long continuous operation of the pump system, spare parts must be replaced timely. The expendable parts in particular must be supplied at hand constantly. For details, contact your dealer.

No.	Parts	Parts cord	Q'ty	Replacement time
9	Drive gear	MDG0523	1	5000 hours
10	Driven gear	MDG0524	1	
13	Front bearing	MDG0529	1	
14	Rear bearing	MDG0530	1	
15	Front plate	MDG0531	1	
16	Rear plate	MDG0532	1	
18	Gasket A	MDG0533	1	Every maintenance interval
23	O ring	MDG0536	2	

■ Disassembling and Assembling

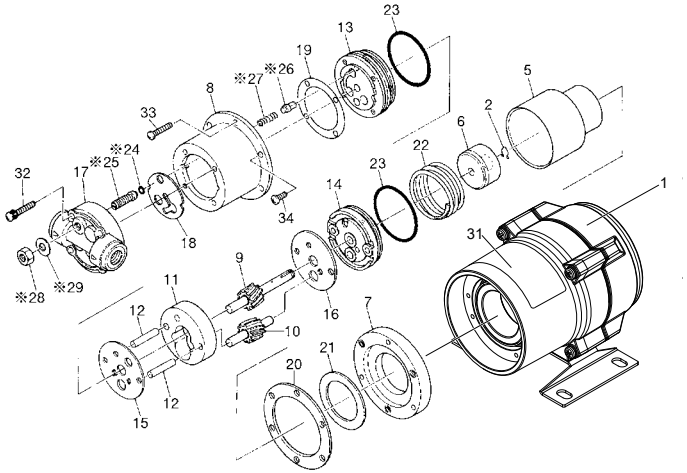

<Disassembling>

1. Remove the 3 machine screws (33) and detach the pump unit off the motor (1).
2. Remove the screw (32)with, spring washer , and plate washer to detach the pump head (17). In the case of MDG-R2( )V type, never disassemble the adjusting screw (25), O ring (24), nut (28), and plain washer (29). Touching these parts may change the set pressure of the relief valve.
3. Remove the gasket A (18), relief valve (26), and relief valve spring (27).
4. Remove the 3 screws(34) and detach the mounting plate (7), packing B (20), bracket (8), and gasket B (19) off the pump unit.
5. Remove the rear casing (5). Leave the packing C (21) on the rear case as it is. In this step, be careful with the liquid which may remain inside the rear casing.
6. Use tweezers or the like to detach the stop ring (2) and remove the retaining spring (22). (See the figure below)

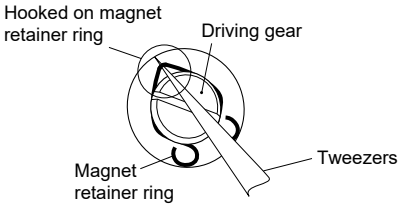

7. Detach the driven magnet (6) from the drive gear (9). Store the removed driven magnet in a place free of steel powder or dust.
8. Disassemble the rear bearing (14), rear plate (16), drive gear(9), driven gear (10), gear case (11), parallel pins (12), front plate (15), and front bearing (13) in the order described. Handle these parts carefully so as not to cause scratches on the surfaces. Store them in a dust-free place after cleaning them.

<Assembling>

1. Attach the O ring (23) to the front bearing (13) and the rear bearing (14) each. Apply silicone grease to the O ring beforehand.

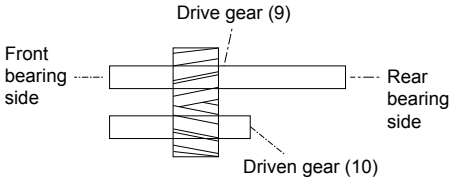

2. Attach the parallel pins (12) onto the front bearing (13). Then, assemble the front plate (15), gear case (11), drive gear (9), driven gear (10), rear plate (16), and rear bearing (14) in the order described. In this step, be careful to match the hole positions of the respective parts. In addition, be sure to insert the drive gear (9) and the driven gear (10) in the directions shown in the figure on the left.

· How to mount parallel pins

When you mount parallel pin on front bearing, face the V groove side to the front bearing. See illustration below.

⚠ CAUTION

· Parallel pin put in reverse may cause lack of suction liquid resulting in failed discharge and damaged pump. Be sure to put V groove side to front bearing.

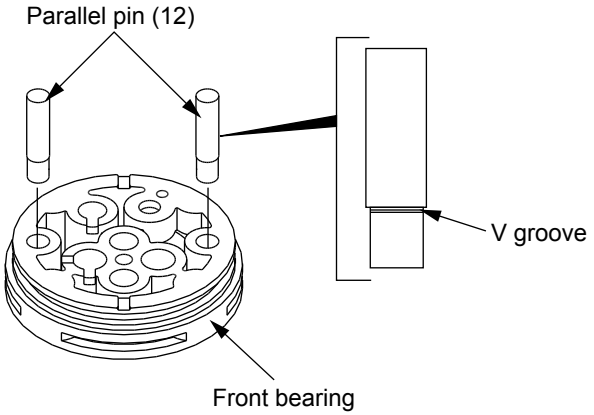

3. Insert the driven magnet(6) onto the drive gear (9) and attach the stop ring (2). Caulk the stop.
4. Attach the retaining spring (22) so that it is inserted in the groove of the rear bearing (14). Attach the rear casing (5) firmly over them.
5. Put the gasket B (19) on the front bearing (13) with the holes aligned exactly. Then, attach the bracket (8) to meet with the 2 grooves.

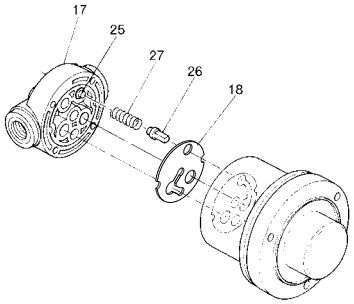

6. Insert the relief valve (26) and relief valve spring (27) into the front bearing (13). Then, attach the gasket A (18) and the pump head (17) by tightening the 4 screws (with P.W. and S.W.) (32). In this step, be careful with the positioning of the bracket, gasket A, and pump head. In the case of MDG-R2( ) V type only, make sure that the adjusting screw (25) and relief valve spring (27) are inserted in position. (See the figure on the left.)

7. Attach the packing B (20) and mounting plate (7) to the bracket (8) by tightening the 3 screws (34). (Note: Fastening torque of 0.6 N•m)

8. Mount 4 screws with P.W & S.W (32) on pump head (17) and tighten them. (Note: Fastening torque of 0.8 N•m)

· Screws tightening order

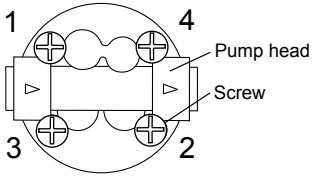

⚠ CAUTION

- When you mount pump head, do not tighten screws with more than specified tightening torque.
- Evenly tighten screws(32) in diagonal order.

9. Attach the assembled pump unit on the motor (1) and fasten the three screws (33).

■ Assembly of the motor to the pump

If a customer mounts the pump and the motor bracket to the motor, follow the instructions below.

⚠CAUTION

- Be sure to turn off power to stop the motor and related devices before work.
- Before the motor bracket is mounted to the motor, make sure that the motor size is correct.
- To avoid personal injury, do not place the drive magnet unit near any metal part or tool.

1. Mount the motor bracket to the motor and tighten them up with the screws.

2. Do not allow foreign matters such as iron pieces to stick to the magnet capsule unit. Slide the drive magnet unit onto the motor shaft straight without excessive force. Check the end face of the drive magnet comes 0.3mm forward from the bracket (see the figure below) and secure them with the set screw and the Loctite #222.

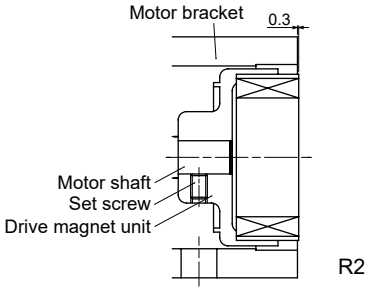

3. Mount the pump to the motor bracket and secure them by 0.8N·m with the three M3×16 screws. Magnetic force of the pump is strong. Be careful not to catch the finger in parts. See the arrow mark on the pump head for the correct direction of the liquid flow.

EC DECLARATION OF CONFORMITY

A copy of the original Declaration of Conformity

(SUPPLIER'S NAME)
WE
IWAKI CO.,LTD.

(ADDRESS)
6-6 2-CHOME KANDA-SUDACHO CHIYODA-KU TOKYO JAPAN

(PRODUCT)
DECLARE UNDER OUR SOLE RESPONSIBILITY THAT THE PRODUCTS
MAGNETIC DRIVE GEAR PUMP

(MODEL NAME)
MDG SERIES (WITH EMC CONFORMITY)

TO WHICH THIS DECLARATION RELATES ARE IN CONFORMITY
WITH THE FOLLOWING STANDARDS OR DIRECTIVES AS FAR AS APPLICABLE

(DIRECTIVES)
MACHINERY DIRECTIVE 2006/42/EC (ANNEX IIA)
EMC DIRECTIVE 2014/30/EU
RoHS DIRECTIVE 2011/65/EU

(STANDARDS)
EN ISO12100:2010 EN61000-6-2:2005 EN IEC63000:2018
EN809:1998+A1:2009 EN61000-6-4:2007+A1:2011

(A PERSON WHO IS AUTHORISED TO COMPILE THE TECHNICAL FILE
IN THE COMMUNITY)
IWAKI EUROPE GMBH
SIEMENSRING 115 D-47877 WILLICH GERMANY

NOTE: THIS DECLARATION BECOMES INVALID IF TECHNICAL OR OPERATIONAL MODIFICATIONS ARE INTRODUCED WITHOUT THE MANUFACTURER'S CONSENT.

水村貴裕

TAKAHIRO MIZUMURA
EXECUTIVE OFFICER SENIOR GENERAL MANAGER,
ENGINEERING HEAD OFFICE

Tokyo, Aug. 25, 2026

(PLACE AND DATE OF ISSUE) **(NAME AND SIGNATURE OR EQUIVALENT MARKING OF AUTHORIZED PERSON)**

DOCUMENT NO. IS-51K-628

CE conformity

■ **Information on CE conformity of pump units when the motor is fitted by the customer (dealer/operator)**

We hereby confirm the CE conformity of our pump unit provided that the following criteria about intended use are satisfied as described in this instruction manual:

- Motor conformity in accordance with any relevant EC directives which are currently effective.
- The dimensions of a required motor flange and shaft must fit the specified pump.
- The motor must be installed to the pump according to this instruction manual.
- Guaranteed grounding
- The pump must not be repainted over our original upper coating.

Any reseller or dealer who connects the pump with a motor and markets it as a complete unit must conform to all relevant EC directives. In such cases, the reseller or dealer then becomes the manufacturer.

Waste Electrical and Electronic Equipment (WEEE)



In accordance with the European Directive 2012/19/EU on waste electrical and electronic equipment, this product features the crossed-out wheelie bin symbol. When this product is disposed of in household wastes, toxic components included in it can cause major environmental and human health problems. Use appropriate waste collection systems for recovery and recycling. Contact your local distributor or nearest Iwaki company for the detailed collection systems.

IWAKI

https://www.iwakipumps.jp

IWAKI CO.,LTD. 6-6 Kanda-Sudacho 2-chome Chiyoda-ku Tokyo 101-8558 Japan
TEL: +81 3 3254 2935 FAX: +81 3 3252 8892

European Headquarter / IWAKI Europe GmbH
TEL: +49 2154 9254 0 FAX: +49 2154 9254 48
Germany / IWAKI Europe GmbH
TEL: +49 2154 9254 50 FAX: +49 2154 9254 55
The Netherlands / IWAKI Europe GmbH (Netherlands Branch)
TEL: +31 74 2420011 FAX: +49 2154 9254 48
Italy / IWAKI Europe GmbH (Italy Branch)
TEL: +39 0445 561219 FAX: +39 0445 569088
Spain / IWAKI Europe GmbH (Spain Branch)
TEL/FAX: +34 934 741 638
Poland / IWAKI Europe GmbH (East Europe Branch)
TEL: +48 12 347 0755 FAX: +48 12 347 0900
Denmark / IWAKI Nordic A/S
TEL: +45 48 242345
Finland / IWAKI Suomi Oy
TEL: +358 10 201 0490
Norway / IWAKI Norge AS
TEL: +47 23 38 49 00
Sweden / IWAKI Sverige AB
TEL: +46 8 511 72900
Belgium / IWAKI Belgium N.V.
TEL: +32 13 670200 FAX: +32 13 672030
France / IWAKI France S.A.
TEL: +33 1 69 63 33 70 FAX: +33 1 64 49 92 73
U.S.A. / IWAKI America Inc.
TEL: +1 508 429 1440 FAX: +1 508 429 1386
Brazil / IWAKI Do Brasil Comercio De Bombas Hidraulicas LTDA.
TEL/FAX: +55 19 3244 5900
China (Shanghai) / IWAKI Pumps (Shanghai) Co., Ltd.
TEL: +86 21 6272 7502 FAX: +86 21 6272 6929
China (Hong Kong) / IWAKI Pumps Co., Ltd.
TEL: +852 2607 1168 FAX: +852 2607 1000
China (Guangzhou) / GFTZ IWAKI Engineering & Trading Co., Ltd.
TEL: +86 20 84350603 FAX: +86 20 84359181
China (Shenzhen) / IWAKI Pumps (Shenzhen) Co., Ltd.
TEL: +86 0755 8656 3696
Singapore / IWAKI Singapore Pte Ltd.
TEL: +65 6316 2028 FAX: +65 6316 3221
Indonesia / IWAKI Singapore Pte Ltd. (Indonesia Office)
TEL: +62 21 6906606 FAX: +62 21 6906612
Malaysia / IWAKIm SDN. BHD.
TEL: +60 3 7803 8807 FAX: +60 3 7803 4800
Korea / IWAKI Korea Co., Ltd.
TEL: +82 2 6238 4800 FAX: +82 2 6238 4801
Taiwan / IWAKI Pumps Taiwan Co., Ltd.
TEL: +886 2 8227 6900 FAX: +886 2 8227 6818
Thailand / IWAKI (Thailand) Co., Ltd.
TEL: +66 2 322 2471 FAX: +66 2 322 2477
Australia / IWAKI Pumps Australia Pty Ltd.
TEL: +61 2 9899 2411 FAX: +61 2 9899 2421

T1286 '26/08