Iwaki Direct Drive Pump

RD Series (built-in type)

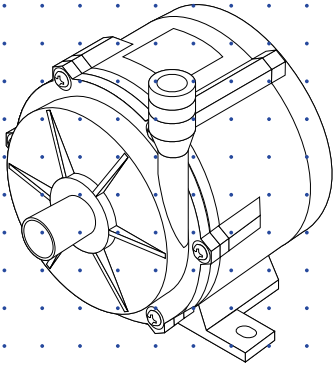

Instruction manual

Thank you for choosing our product.

Please read through this instruction manual before use.

This instruction manual describes important precautions and instructions for the product. Always keep it on hand for quick reference.

© 2022 IWAKI CO.,LTD.

Order confirmation

Open the package and check that the product conforms to your order. If any problem or inconsistency is found, immediately contact your distributor.

a. Check if the delivery is correct.

Check the nameplate to see if the information such as model codes, discharge capacity and discharge pressure are as ordered.

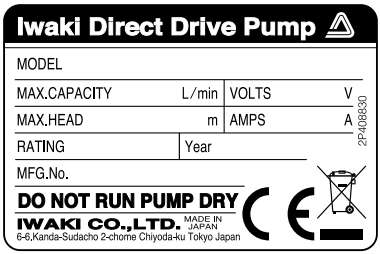

Spec label for the European market

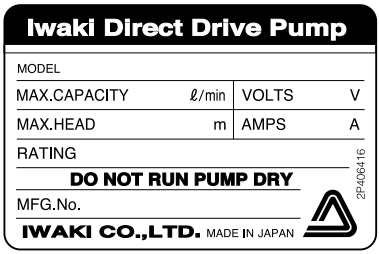

Spec label for any area other than the European market

*The CE marking on our product(s) is for us to market the product(s) into the European market, however, the CE marking does not ensure any safety or conformity of the product(s) outside the European market.
When the pump is incorporated into the equipment marketed in the European market, such equipment must meet all the requirements of applicable directives. In such a case, any person who places the equipment on the market must carry a CE mark on the equipment as a manufacturer.

b. Check if the delivery is damaged or deformed.

Check for transit damage and loose bolts.

Contents

Order confirmation **2**

Safety instructions ***5***

WARNING **6**
CAUTION **7**
Precautions for use **9**

Overview ***11***

Introduction **11**
Pump structure & Operating principle 11
Part names **12**
Introduction **12**
Before operation 12
Priming 13
Liquid to be handled 13
ON-OFF operation 13
Identification codes **14**

Installation ***15***

Pump mounting **15**
Pipework **16**
Plumbing layout 16
■ Discharge & Suction valves 17
■ Pressure gauge 17
■ Drain valve 17
Plumbing 17
■ Quick fastener 19
Plumbing precautions 19
■ Suction line 19
■ Discharge line 20
Wiring **21**
Power & External signal cables 21

■ Before wiring 21
■ Rated current & Starting current 22
Wiring examples 23
■ Specification (connector) 23
■ Wiring diagram (option cable) 24
■ Wiring diagram (with no 1-5VDC signal generator) 25

Operation ***26***

Pump operation **26**
Start-up 26
Shutdown 27

Maintenance ***28***

Troubleshooting **28**
Retightening of pump head fixing screws 29
Drainage **30**
Blowdown 30
Inspection **32**
Daily inspection 32
Specification/Outer dimension **33**
Specification 33
Outer dimensions 35
Performance curves 37
■ RD-05 37
■ RD-05H 37
■ RD-12 38
■ RD-12Z 38
■ RD-20 39
■ RD-30 39
Part names & Structure 40
■ RD-05/-05H 40
■ RD-12/-12Z 40
■ RD-20/-30 41
EC DECLARATION OF CONFORMITY 42

Safety instructions

Read through this section before use. This section describes important information for you to prevent personal injury or property damage.

■ Symbols

In this instruction manual, the degree of risk caused by incorrect use is noted with the following symbols. Please pay attention to the information associated with the symbols.

⚠ **WARNING**	Indicates mishandling could lead to a fatal or serious accident.
⚠ **CAUTION**	Indicates mishandling could lead to personal injury or property damage.

A symbol accompanies each precaution, suggesting the use of "Caution", "Prohibited actions" or specific "Requirements".



⚠ Export Restrictions

Technical information contained in this instruction manual might be treated as controlled technology in your countries, due to agreements in international regime for export control.

Please be reminded that export license/permission could be required when this manual is provided, due to export control regulations of your country.

⚠ WARNING

Turn off power before service

Risk of electrical shock. Be sure to turn off power to stop the pump and related devices before service is performed. Ensure power cannot be turned on during maintenance. Failure to do so may result in serious injury. In noisy or low-visibility areas, place a “POWER OFF (Maintenance)” sign near the switch.


Requirement

Stop operation

If you notice any abnormal or dangerous conditions, suspend operation immediately and inspect/solve problems.


Requirement

Do not use the pump in any condition other than its intended purpose

The use of the pump in any conditions other than those clearly specified may result in failure or injury. Use this product in specified conditions only.


Prohibited

Do not modify the pump

Alterations to the pump carry a high degree of risk. It is not the manufacturer's responsibility for any failure or injury resulting from alterations to the pump.


Do not rework or alter

Wear protective clothing

Always wear protective clothing such as an eye protection, chemical resistant gloves, a mask and a face shield during disassembly, assembly or maintenance work. The specific solution will dictate the degree of protection. Refer to SDS precautions from the solution supplier.


Wear protectors

Use of hazardous chemicals

Risk of personal injury or fire. Check/monitor plumbing system for leaks before and during operation when handling a flammable, corrosive or harmful liquid.


Caution

Do not damage the power cable

Do not pull, knot, or crush the power cable. Damage to the power cable could lead to a fire or electrical shock if cut or broken.


Prohibited

Do not operate the pump in a flammable atmosphere

Do not place explosive or flammable material near the pump.


Keep fire away

⚠CAUTION

Qualified personnel only
The pump should be handled or operated by qualified personnel with a full understanding of the pump. Any person not familiar with the product should not take part in the operation or maintenance of the pump.


Requirement

Use specified power only
Do not apply power other than that specified on the nameplate. Otherwise, failure or fire may result. Ensure the pump is properly grounded.


Requirement

Do not run pump dry
Running the pump without liquid, friction heat builds up and damages the internal parts of pump.


Prohibited

Ventilation
Fumes or vapors can be hazardous with certain solutions. Ensure proper ventilation at the operation site.


Requirement

Do not install/store the pump:
- Where the ambient temperature is outside the specified range for each model:
  - 0–40°C (32–104°F) for NRD-05/-05H/-20/-30
  - 0–50°C (32–122°F) for RD-12/-12Z/-30_V24-HV
- In a flammable atmosphere or in a dusty/humid environment.
- In direct sunlight or wind & rain.
- In mechanical vibration.
- In a corrosive atmosphere such as chlorine gas.


Prohibited

Spill precautions
Ensure protection and containment of solution in the event of plumbing or pump damage (secondary containment).


Requirement

Do not stand on the pump
Injury or damage may result when the pump turns over.


Prohibited

Do not touch the pump or pipe with bare hands
Risk of burns. The surface temperature of the pump or piping becomes very high during and immediately after operation, depending on the liquid temperature.


Caution

Keep electric parts and wiring dry
Risk of fire or electric shock. Install the pump where it can be kept dry.


Prohibited

Keep clear of the pump when power is turned on
The pump does not have an on/off switch and starts automatically when the power cable is plugged in and a 1–5 VDC control voltage is supplied.


Requirement

Remove foreign matter
If foreign matter enters the pump, turn off the power and clean the pump. Otherwise, the pump may be damaged.


Requirement

Static electricity
When low electric conductivity liquids such as ultra-pure water and fluor inactive liquid (e.g. Fluorinert™) are handled, static electricity may generate in the pump and may cause static discharge. Take countermeasures to remove static electricity.


Requirement

Check pump head bolts
Liquid may leak if any of pump head bolts become loose. Tighten the bolts diagonally and evenly by 1.6N•m before initial operation and at regular intervals.


Caution

Do not use the pump in a wet location
The pump is not waterproof. Use of the pump in wet or extremely humid locations could lead to electric shock or short circuit.


Prohibited

Do no use a damaged pump
Use of a damaged pump could lead to an electric shock or death.


Prohibited

Disposal of a used pump
Dispose of any used or damaged pump in accordance with local rules and regulations. If necessary, consult a licensed industrial waste disposal company.


Requirement

Do not pressurize the pump excessively
If the pump is pressurized over the maximum discharge pressure, O ring seal may be impaired and leakage may result.


Prohibited

Precautions for use

• Electrical work should be performed by a qualified electrician. Otherwise, personal injury or property damage could result.


Caution

• Do not install the pump:
  –In a flammable/corrosive/explosive atmosphere.
  –In a dusty place.
  –In direct sunlight or wind & rain.
  –In mechanical vibration.
  –Where ambient temperature can exceed 0-40ºC (or 50ºC. See page 33.)
  –Where ambient humidity can exceed 30-85RH (or 90RH. See page 33.).

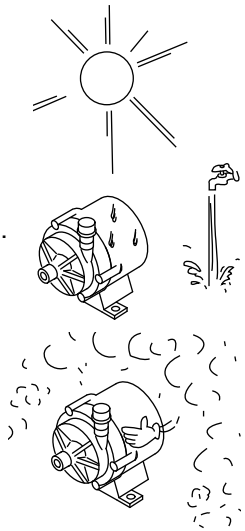

• Allow sufficient space around the pump for easy access and maintenance.


Requirement

• Use care handling the pump. Do not drop. An impact may affect pump performance. Do not use a pump that has been damaged to avoid the risk of electrical damage or shock.



• This pump is not capable of self-priming. Always prime the pump before operation.

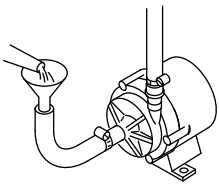

- The pump is not waterproof. Do not operate the pump while wet with solution or water. Failure or injury may result. Immediately dry off the pump if it gets wet.



- Do not close discharge line during operation. Solution may leak or piping may break.



- Solution in the discharge line may be under pressure. Release the pressure from the discharge line before disconnecting plumbing or disassembly of the pump to avoid solution spray.



- Wear protective clothing when handling or working with pumps. Consult solution SDS for appropriate precautions. Do not come into contact with residual solution.



- Do not clean the pump or nameplate with a solvent such as benzine or thinner. This may discolour the pump or erase printing. Use a dry or damp cloth or a neutral detergent.



- In accordance with the European Directive 2012/19/EU on waste electrical and electronic equipment (WEEE), this product features the crossed-out wheelie bin symbol. When this product is disposed of in household wastes, toxic components included in it can cause major environmental and human health problems. Use appropriate waste collection systems for recovery and recycling. Contact your local distributor or nearest Iwaki company for the detailed collection systems.

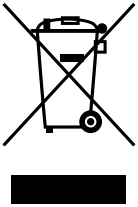

Overview

Pump characteristics, features and part names are described in this section.

Introduction

Pump structure & Operating principle

The RD pump is a canned motor pump with a brushless DC motor.
The magnetic force of the motor rotates the driven magnet in order for the impeller to revolve in the pump chamber, where a liquid is transferred from the inlet to outlet.

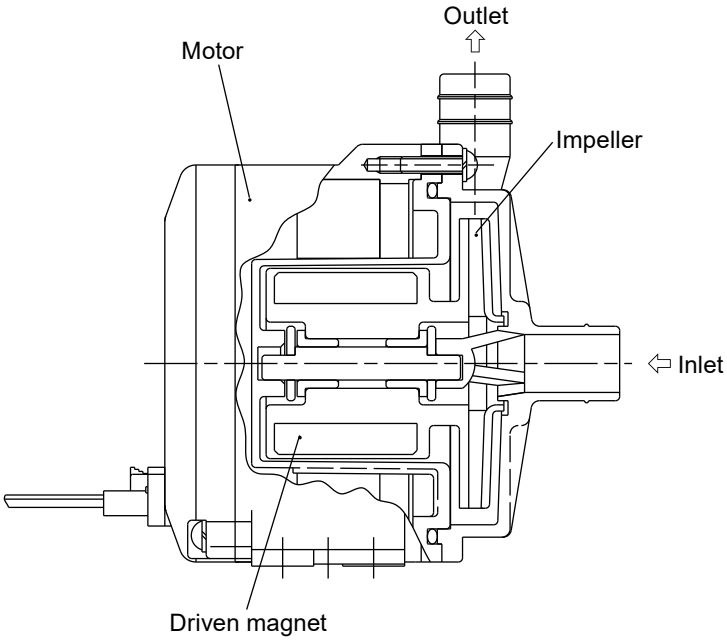

Part names

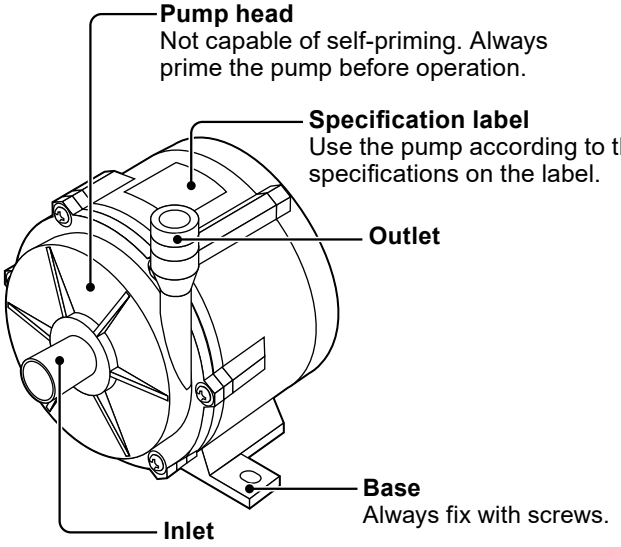

Introduction

Before operation

Water hammer phenomenon may occur when starting or stopping operation, especially when the discharge line is too long.

When starting operation:

First prime the pump and close the discharge valve. Run the pump and then start to open the valve to meet a duty point slowly.

When stopping operation:

Slowly close the discharge valve until it bottoms out. Then turn off power to stop the pump.

*Do not close the discharge line sharply, or water hammer phenomenon may occur and damage the pump with impact pressure.

Priming

This pump is not capable of self-priming. Always prime the pump before operation. Running the pump without priming water, internal parts are excessively worn by friction heat and fatal pump damage results.

Liquid to be handled

Do not use the following liquids.

- Paraffinic hydrocarbons such as gasoline and kerosene
- Halogenated hydrocarbons such as trichloroethylene and carbon tetrachloride
- Ether and low-grade ester
- Slurry (never use slurry, which wears out the pump bearings.)
- Magnetic fluid
- Explosive or flammable liquid

A strong magnet is inside the pump.
Do not use the pump with any liquid which contains metals such as iron and nickel.

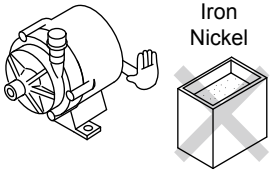

Observe the viscosity limit of 1mPa•s (at SG=1.0)
Pure water may bring poor lubrication to the bearing. Contact us in advance.

Effect of temperature change
Viscosity, vapour pressure or corrosiveness changes with liquid temperature. Observe the allowable range at each model shown on page 33.

ON-OFF operation

Do not turn on or off the pump 2 times or more per minute and observe the allowable shortest ON or OFF time of 15sec.

Identification codes

The model code represents the following information.

<RD-05/-05H/-20/-30 (except RD-30_V24-HV)>

RD - 05 T E 24
a b c d e

a. Series name
RD

b. Pump size
05/ 05H/ 20/ 30

c. Bearing material
No code: Filled PPS (RD-05/-05H) Filled PTFE (RD-20/-30)
T: PTFE (RD-05/-05H/-20/-30)

d. Oring material
V: FKM E: EPDM

e. Power voltage
24: 24VDC

<RD-12/-12Z/-30_V24-HV>

RD - 12 T E 24 - _ N1 V 12
a b c d e f g h i

a. Series name
RD

b. Pump size
12/ 12Z/ 30

c. Bearing material
No code: Filled PTFE (RD-30)
T: PTFE

d. Oring material
V: FKM (RD-30_V24-HV only) E: EPDM (RD-12/-12Z)

e. Power voltage
24: 24VDC

f. Liquid temperature
No code: Normal temperature H: High liquid temperature (RD-30_V24-HV only)

g. Connection
No code: Tube N1*: NPT thread N2*: NPT thread (Pressure resistant)
Q1*: Quick fastener Q2*: Quick fastener (Pressure resistant)

h. External input
V: 1-5VDC

i. Motor size
12: 12W (RD-12) 14: 14W (RD-12Z)

* RD-30_V24-HV is excluded.

Installation

Installation of the pump, tubing and wiring are described in this section.

Observe the following points

- Risk of electrical shock. Be sure to turn off power to stop the pump and related devices before service is performed.
- If you notice any abnormal or dangerous conditions, suspend operation immediately and inspect/solve problems.
- Do not place explosive or flammable material near the pump.
- Use of a damaged pump could lead to an electric shock or death.
- A strong magnet is inside the pump. Do not bring a watch or magnetic device which may be adversely affected by a magnetic force.

Pump mounting

1 Select a suitable place

Allow sufficient space around the pump for easy access and maintenance.

- Select a level location, free from vibration, that won't hold liquid. If the pump is not installed level, output may be affected.
- Keep good ventilation, taking account of the self-heating of pump.

2 Mounting position

This pump is not capable of self-priming and should be installed lower than the supply tank liquid level. Always keep a liquid level 30cm higher than the outlet of the tank, or air may enter a suction line and bearings may be worn badly.

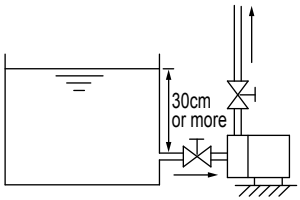

3 Anchor the pump

Use four bolts so it doesn't vibrate. See page 35 & 36 for the mounting hole size or suitable bolt size.

NOTE

Do not mount the pump in a vertical direction.

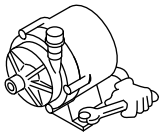

Pipework

Connect tubes to the pump and install a check valve.

Precautions

- Using a high flow pump and a small supply tank, a liquid level in the tank changes greatly.
- Do not allow a drop of adhesive agent or sealant into pipework. They may cause fatal damage to the pump.
- If pipework directory weighs on the pump, deformation or damage may result. Be sure to install pipe supports.
- Air may be entrained into a suction line when a supply tank is refilled during operation. Take any action to prevent air ingress such as installing a baffle.
- Make sure every joint in plumbing is securely sealed.
- Use a corrosion-/pressure-resistant vinyl tube such as a braided and a teflon tube, otherwise a suction tube can be crushed by negative pressure (especially for hot liquid).

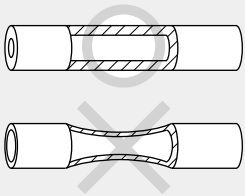

Plumbing layout

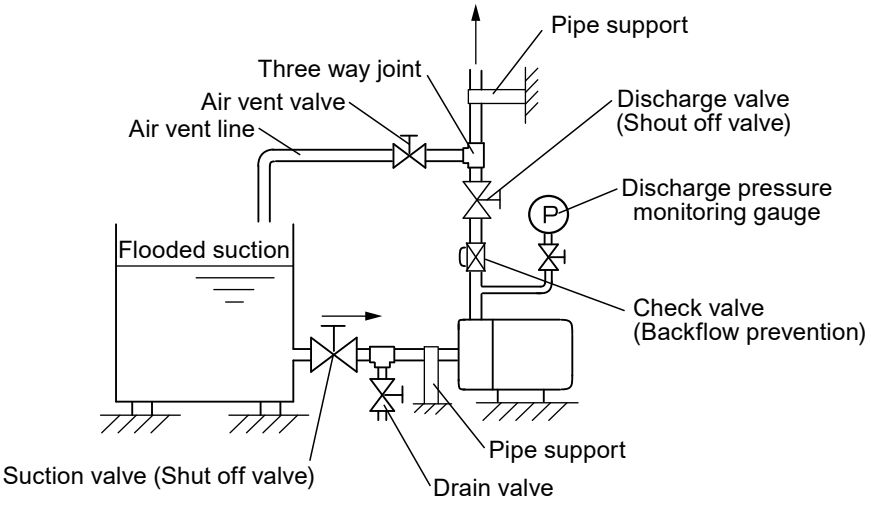

■ Discharge & Suction valves

Install a ball valve on a discharge line for the adjustment of a flow rate/delivery head or shutting off a flow, and on a suction line for the convenience of maintenance or shutting off a flow, as close to the pump as possible.

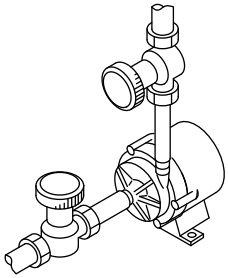

■ Pressure gauge

Install a pressure gauge for monitoring discharge line pressure.

■ Drain valve

Install a drain valve in between the pump inlet and a suction valve for blowing down liquid.

Plumbing

Tube

1 **Cut the tube end flat**

Select a tube in accordance with the inlet and outlet of the pump. Connection will not be secured if a different size tube is used.

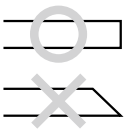

2 **Connect tube into the pump inlet**

First slide an applicable screw/band tube clamp onto a tube. Then push a tube end into an inlet or outlet until it bottoms out.

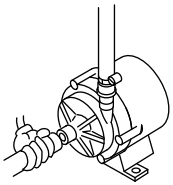

3 **Clamp down connection**

Be sure to secure the tube connection with a clamp to eliminate the possibility of leakage.

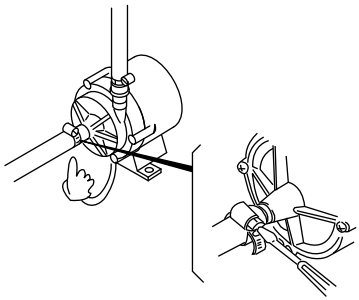

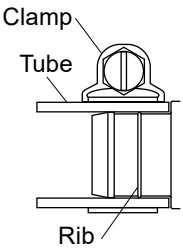

NOTE

- Do not use excessive force. The plastic inlet and outlet may break.
- Always use a screw/band tube clamp. Do not use wire clamp.

Pipe

1 **Prepare plastic thread pipes**

Do not select a metal pipe which can break the plastic inlet/outlet.

2 **Apply thread sealing tape**

Wrap a sealing tape two to three turns to the inlet and outlet of the pump. Do not wrap too many times unnecessarily, otherwise the connection may break.

NOTE

Do not use a liquid sealant. A liquid sealant can deteriorate the plastic connection.

3 **Tighten the plastic thread pipes**

Do not hold the motor. Hold the pump head and tighten the plastic pipe to the pump inlet/outlet by 4.0 N•m or below.

■ **Quick fastener**

See the dimension below for connection by quick fastener.

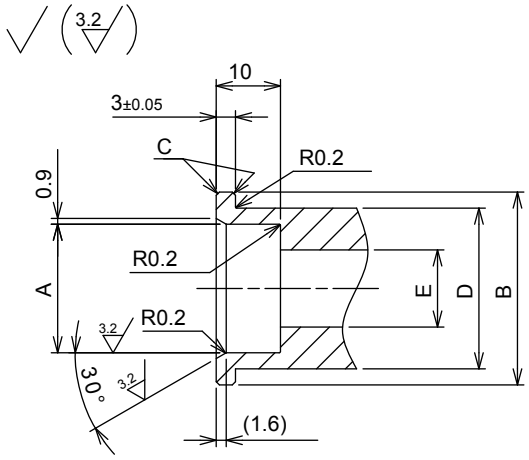

	P-16	P-14	P-10
A	ø20 $^{+0.06}_{0}$	ø18 $^{+0.06}_{0}$	ø13 $^{+0.05}_{0}$
B	ø30	ø26	ø20
C	C0.5	C0.5	C0.5
D	ø25	ø22	ø17
E	ø12 or more	ø10 or more	ø6 or more
Quick fastener	16A	12.7	10

Plumbing precautions

■ **Suction line**

- In order to minimize plumbing resistance, have plumbing shortest with the minimum bends. Note cavitation* tends to occur when plumbing length is too long.
- A liquid level should be at least 30cm higher than the tank outlet for the prevention of air ingress.
- Keep liquid in a supply tank free from foreign matters. Clean the tank at intervals.
- Avoid any loops in a plumbing run that could form a vapour trap. A suction line should be laid on a rising gradient of 1/100 toward the pump so as to expel air easily.
- Be sure to secure connections on a suction line for the prevention of entrained air. The presence of air in a suction line may prevent liquid delivery.
- Do not use a suction tube, pipe or coupler with a smaller I.D. than the pump inlet.

Suction line examples

Acceptable	Unacceptable
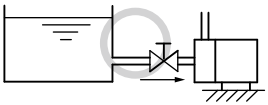 Flooded suction	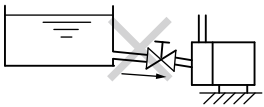 Descending gradient
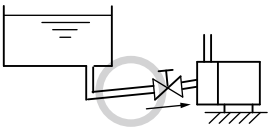 Ascending gradient	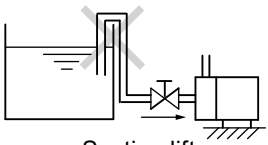 Suction lift
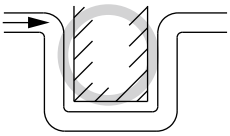 U-shaped piping	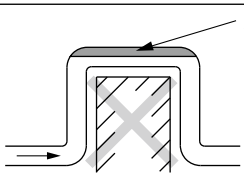 Arched piping

Glossary

Cavitation

Air bubbles caused by a negative pressure in the pump unit, accompanied with vibration and noise. Performance deterioration or part damage results.

■ Discharge line

- Use measures to keep the pump connections free from stress. Weight and thermal expansion/contraction of the piping can stress connection points.
- The longer the plumbing length, the more pipe resistance. If the plumbing length is long, widen the pipe I.D. accordingly to reduce the pipe resistance and ensure the rated pump performance is kept.
- Liquid in the pump and plumbing may freeze and consequently cause damage at a freezing temperature. Drain or flush the pump and plumbing before leaving them for a long period.

Wiring

Wiring for power source, earthing and external signal.

Observe the following points

- Electrical work should be performed by a qualified electrician. Conform to local electric codes.
- Risk of electrical shock. Be sure to turn off power to stop the pump and related devices before service is performed. Or an electrical shock or short circuit may result.
- Be careful for power not to be turned on during work.

Power & External signal cables

■ Before wiring

- Check that the main power is turned off.
- Electrical work should be performed in accordance with local electric codes, with an appropriate wire gauge or so.
- Apply the rated power voltage. See the spec label.
- The pump doesn't have an ON-OFF switch. The pump starts as a power cable is plugged in. Do not turn ON and OFF power in a short time.
- When an external fuse is used and it has blown, always solve the root cause of blowout. Be sure to unplug the pump before investigation. If the fuse blows frequently, the starting current may be a root cause.
- Check power voltage has reduced to 0V before turning on power, especially right after operation. Otherwise, the pump may not start to run.
- Use a DC power supply that assures voltage increment to 24VDC within 50ms. If it takes more than 50ms, the pump may not start to run.
- In order to make the ON-OFF operation, install the switch between the DC power supply and the pump. Installing it between the DC power supply and the AC power supply, the pump may not run.



Wiring example

- After wiring is made, check that peripheral devices in your system are free from the inductive noise at start-up in advance.
- Noise accompanies the high-speed switching of the drive circuit in the pump. Check it does not affect peripheral devices in your system in advance.
- If the DC power supply is shared with the inductive loads such as solenoid and relay, take protective measures against surge.
- The 1-5VDC external variable signal is used for just a simple flow control, and a flow rate is not even in proportion to the signal voltage. When better controllability is required, install a flow sensor to establish the feedback control system.

■ Rated current & Starting current

Model	Rated current	Starting current
RD-05	0.4A	1.5A
RD-05H	1.6A	4A
RD-12	1.0A	4A
RD-12Z	1.2A	5A
RD-20	2.5A	8A
RD-30/-30_V24-HV	3.2A	10A

Wiring examples

A 500mm option cable is available (except RD-05H).

■ Specification (connector)

Models	Pin alignment			Receptacle	Applicable connector		Applicable lead wire
	1	2	3				
RD-05	-	Power (-)	Power (+)	WP22A03M	WP20B03F	705432-2M	AWG#22 UL3265
RD-12/-12Z	External variable signal (+)*	Power (-)		CA01A1-03BA	CA01A6-03B0-02	CA01C6-010A	
RD-20/-30	-			CL07E03M	CL07D03A	215004-2M	AWG#20 UL3266
RD-30_V24-HV	External variable signal (+)*						

*The power voltage (–) is common to the external variable signal (–).
*The external variable signal should not exceed 25.2VDC.

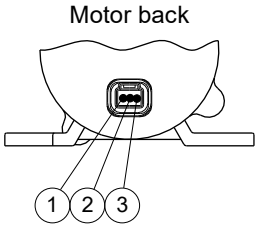

NOTE

Observe polarity, otherwise failure or malfunction may result. Note that rotational direction of the motor does not change by reversing polarity.

■ Wiring diagram (option cable)

RD-05/-05H/-20/-30 (except 30_V24-HV)

*The RD-05H has already been equipped with cables at our factory.

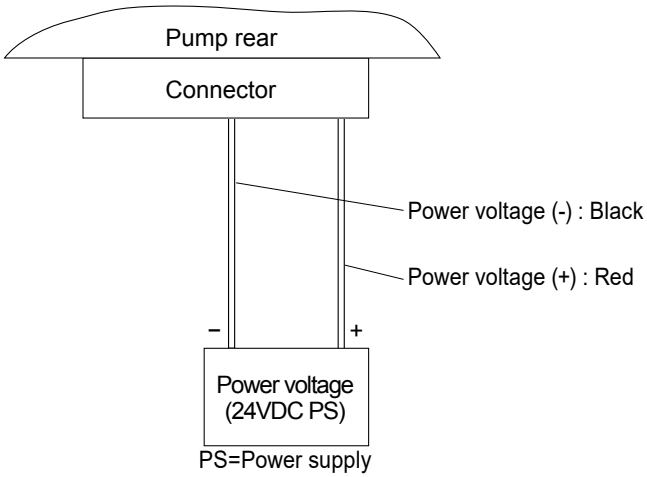

RD-12/-12Z/-30_V24-HV

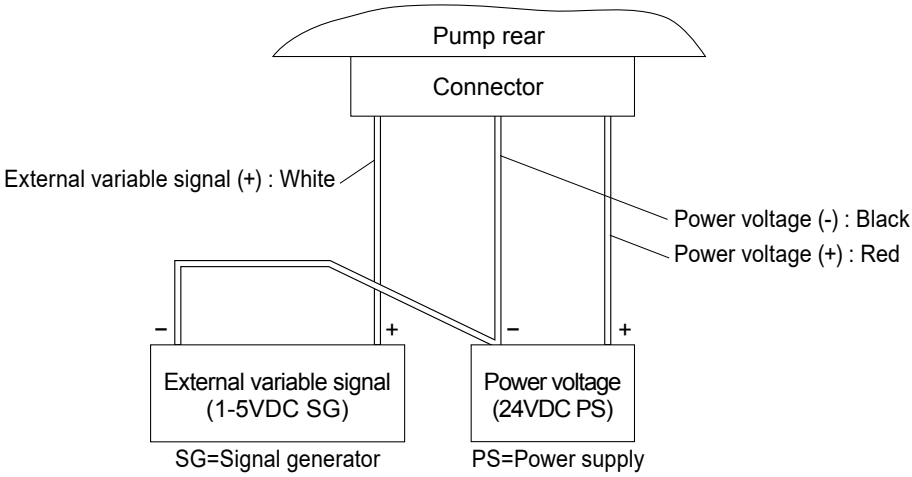

■ **Wiring diagram (with no 1-5VDC signal generator)**

The pump is able to run with no 1-5VDC signal generator when electrically wired as follows. In this case the pump runs at the maximum speed.

Model	Pin alignment		
	1	2	3
RD-12/-12Z/-30_V24-HV	Power (+)	Power (-)	Power (+)

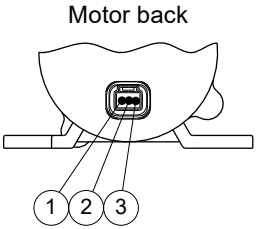

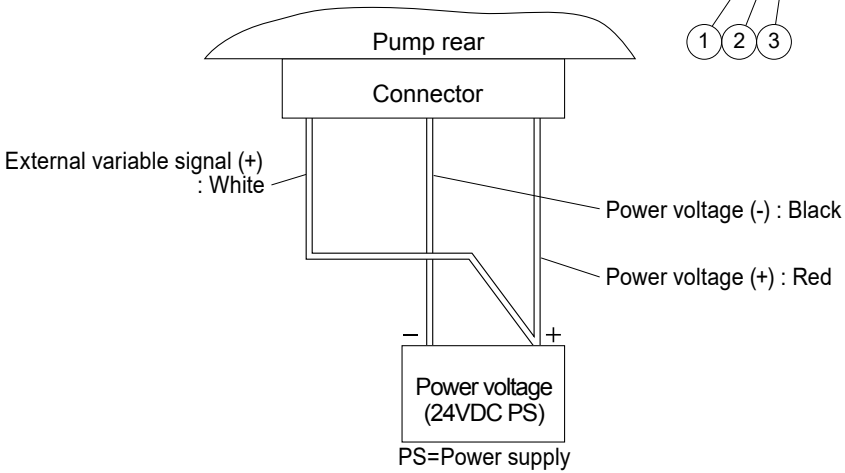

Operation

The pump becomes ready after pipework and wiring is completed.

Observe the following points

- Do not operate the pump with the suction valve (gate valve) closed. Otherwise, the internal parts of the pump will be damaged.
- For the prevention of water hammer, close the discharge valve completely at the start of operation and then gradually open the valve as discharge pressure increases.
- Do not close a discharge line during operation. Or liquid temperature rise may damage the pump.
- Risk of scald injury. The surface temperatures of the pump and pipe rise high along with liquid temperature. Do not touch the pump or pipe surface directly in or right after operation.

Pump operation

Start-up

No.	Procedure	Points to be checked
1	Check plumbing, wiring and power voltage.	• See "Pipework" and "Wiring" sections. • Check the spec label for specified supply voltage.
2	Clean the inside of tubing/piping and tank. Then prime the pump.	• Do not allow foreign mattes to enter the pump.
3	Open a valve.	• Fully open a suction valve. • Fully close a discharge valve. • Close an air vent valve as necessary.
4	Supply the main power and send the external variable signal.	• The pump may not start to run if the signal is less than 3VDC, because starting torque is too low and subsequently the internal protective circuit locks the motor. In this case, increase the signal to 3VDC or more to run the motor and then reduce to a target value. • The minimum starting voltage changes with plumbing, liquid property and other operating conditions.
5	Open a discharge valve to adjust a flow to a specified level.	• Open a discharge valve slowly to meet a duty point. Do not rotate the valve sharply. • Observe the minimum flow rate of 0.5L/min. (a tenth of the max flow rate for the RD-12/-12Z/-30_V24-HV). Operation below that flow rate builds up friction heat to a break down if it continues more than 1 minute. • Turn off power if operation is upset, see page 28.

No.	Procedure	Points to be checked
6	Expel air from the pump.	• Air may not be expelled well if plumbing resistance is too high. Install air vent line as necessary. • Completely expel air from the pump. Or the bearing will be badly worn. • Keep the discharge line resistance to 1m or below and repeat 15-second operation about 5 times.
7	Check the operation	• Do not allow foreign matters to enter the pump. Foreign matters may cause the impeller to be locked, hindering liquid circulation. In this case turn off power immediately and contact us. • Turn off power when the fuse has blown. Investigate a root cause according to the troubleshooting section of page 28.

NOTE

Turn off power immediately at system upset. See page 28 for troubleshooting.

Shutdown

! Observe the following points

- Liquid in the pump and plumbing may freeze and consequently cause damage at a freezing temperature. Drain or flush the pump and plumbing before leaving them for a long period.
- Use a heater to prevent liquid from freezing when the pump is temporarily stopped at a freezing temperature.
- In case a blackout interrupts the pump operation, switch off the pump and close the discharge valve.

No.	Procedure	Points to be checked
1	Close a discharge valve slowly.	• Do not cause sudden closure by using a solenoid valve, or pump may be damaged.
2	Stop the external variable signal. And then turn off main power.	• The pump does not always stop at the same voltage level of the external variable signal as it is reduced. It varies with plumbing, power spec and other operating conditions. • When phasing down the voltage level, the pump may stop before a signal level falls below 1VDC. In this case, the motor may still be charged. Be sure to reduce the signal level to 0VDC before turning off main power. • Follow the Start-up procedure every time the pump is run. If the pump does not run, inspect the pump.

Maintenance

Troubleshooting, inspection, wear part replacement, exploded views and specifications are described in this section.

Troubleshooting

Handling of the pump, maintenance and inspection should be carried out within this instruction manual. Do not go beyond the descriptions in this manual.
It is not the manufacturer's responsibility for personal injury or property damage resulting from unauthorized service. Contact us or your nearest distributor as necessary.

States	Possible causes	Solutions
Abnormal heat	A motor has locked up or a circuit has failed.	Contact us.
	Specific gravity or viscosity is too high.	Replace with a suitable pump.
	Liquid and ambient temperature are out of spec.	Contact us.
Pump does not run.	Wrong wiring	Inspect wiring. Rewire as necessary.
	A motor has locked up or a circuit has failed.	Contact us.
	Specific gravity or viscosity is too high.	Replace with a suitable pump.
	Power capacity shortage	Check power capacity.
	Frequent ON-OFF	Do not make a frequent ON-OFF. See page 13.
Flow rate/ delivery head is too low.	Air trap in the pump	Expel air.
	Entrained air from the suction line	Check the line.
	Dry running	Check for possibility of dry running before operation.
	Specific gravity or viscosity is too high.	Replace with a suitable pump.
	Pump head mounting screws are loose.	Tighten the mounting screws by 1.6 N•m.

Over current	Wrong wiring	Inspect wiring. Rewire as necessary.
	A motor has locked up or a circuit has failed.	Contact us.
	Dry running	Check for possibility of dry running before operation.
	Specific gravity or viscosity is too high.	Replace with a suitable pump.
Significant noise and vibration	A motor has locked up or a circuit has failed.	Contact us.
	Air trap in the pump	Expel air.
	Dry running	Check for possibility of dry running before operation.
Leakage	Pump head mounting screws are loose.	Tighten the mounting screws by 1.6 N•m.

Retightening of pump head fixing screws

After a long period of operation or storage, the pump head mounting screws may come loose. Tighten the mounting screws by 1.6N•m as necessary.
Do not use excess force. The plastic pump head may deform.

Drainage

No drain port is provided to this pump. See drainage procedure below.

Observe the following points

- Turn off power before drainage.
- Always wear protective clothing such as an eye protection, chemical resistant gloves, a mask and a face shield during disassembly, assembly or maintenance work. The specific solution will dictate the degree of protection. Refer to SDS precautions from the solution supplier.
- Solution in the discharge line may be under pressure. Release the pressure from the discharge line before disconnecting plumbing or disassembly of the pump to avoid solution spray.
- Do not drain chemical liquids directly on the ground or the floor. Dispose of chemicals in accordance with local rules and regulations.
- The pump is not waterproof. Do not operate the pump while wet with solution or water. Failure or injury may result. Immediately dry off the pump if it gets wet.
- Dilute and flush out harmful liquid before removing a tube or a pipe.

Blowdown

1 **Turn off power**

Make sure no one turns on power by mistake in service.

2 **Close both the discharge and suction valves**

Use the drain valve if it is equipped on a suction line. Note some amount of liquid will remain in the pump.

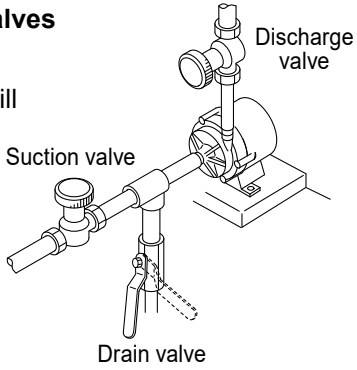

3 **Remove tubes or pipes from the inlet and outlet**

Collect residual liquid from plumbing in a container.

NOTE

Do not get wet with dripping residual liquid.

4 **Remove anchoring bolts and release the pump**

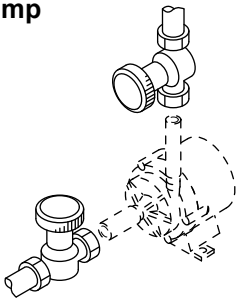

5 **Direct the inlet downwards to run off liquid in the container**

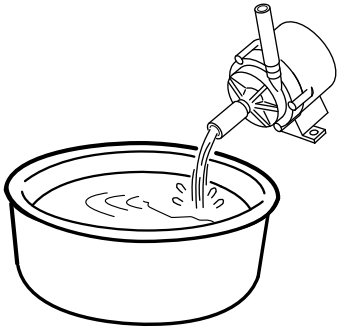

Inspection

Perform daily and periodic inspections to keep pump performance and safety.

Daily inspection

Check the following points. If you notice any abnormal or dangerous conditions, suspend operation immediately and inspect/solve problems according to the troubleshooting section. If it does not help removing problems, contact us or your nearest distributor. Do not disassemble the pump.

No.	States	Points to be checked	How to check
1	Evidence of a leak	• Check for a leak. Do not start operation with a leak.	Visual
2	Pumping	• If liquid is pumped.	Flow meter or visual inspection
		• If the suction and discharge pressure are normal.	Check specification.
		• If a liquid level in a supply tank is proper.	Visual
		• If liquid is deteriorated, crystallized or settled.	Visual or audio inspection
3	Noise and vibration	• If abnormal noise or vibration occurs. They are signs of abnormal operation.	Visual or audio inspection
4	Air ingress from pump head joints and a suction line	• If discharge liquid includes air bubbles, check lines for a leak and retighten as necessary.	Visual or audio inspection
5	Load to the pump	• If discharge pressure and current are normal.	See the motor spec label.
6	Performance specification	• If discharge pressure, a flow rate or load current fluctuates. If so, see the troubleshooting section.	See the performance specification.

Specification

Model code	Connections		Max flow	Max head	Max noise	Max SG	Motor		Weight
	Inlet	Outlet					Power voltage	Rated output	
RD-05	ø14mm	ø8mm	4.7L/min	3.6m	40dB	1.0	24VDC	4.4W	0.4kg
RD-05H			7.9L/min	11.0m	45dB			18W	0.5kg
RD-12	ø18mm	ø18mm	12.7L/min	6.8m	40dB	1.0		12W	0.4kg
	NPT3/8"	NPT3/8"							
	P-16	P-14							
RD-12Z	ø18mm	ø10mm	3.8L/min	10.5m				14W	
	NPT3/8"	NPT1/4"							
	P-16	P-10							
RD-20	ø18mm	ø18mm	19.5L/min	9.3m	55dB			28W	1.3kg
RD-30			23.5L/min	11.5m				45W	

*The max flow & head fields show average values obtained at our shipping inspection. There may be deviation up to ±10% of the values on each individual.
*The data above and dimensions may be changed without prior notice.
*This data above is based on pumping clean water at ambient temperature.
*The maximum flow rate could be obtained if a delivery head was 0 m. The maximum head could be obtained if a flow rate was 0 L/min.
*The maximum viscosity is 1mPa•s when specific gravity is 1.0.
*Observe the allowable maximum pressure of 0.60MPa for pressure resistant types, or a leak or a break may result. Do not install other types than pressure resistant in a pressurized line.
*Observe the allowable ranges of ambient temperature/humidity and liquid temperature as below. Note the ranges may change with operating conditions such as development of heat cycle (do not use the prohibited liquid on page 13).

Model	Ambient temperature	Liquid temperature	Ambient humidity
RD-05/-05H	0-40ºC	0-40ºC	30-85%RH
RD-12	0-50ºC	0-75ºC	30-90%RH
RD-12Z		0-60ºC	
RD-20/-30	0-40ºC	0-40ºC	30-85%RH
RD-30_V24-HV	0-50ºC	0-80ºC	30-90%RH

*Motor type: The pumps are equipped with a BLDC motor and its drive circuit provides the following protections.

a. Pump lock protection

A speed detector monitors the impeller speed. The motor stops when it is upset by foreign matters. Solve the root causes and then reboot. Now the pump is ready to restart.

b. Heat protection

The pump stops when the motor temperature becomes extremely high due to a sharp rise of an ambient/liquid temperature or an overload to the motor. Solve the root causes and then reboot. Now the pump is ready to restart.

c. Overcurrent limiting control circuit

Drive elements are protected from the starting current and excessive current.

d. Fuse

A fuse is equipped in driving circuit in order to protect other equipment or to prevent a fire which may occur when an internal circuit is damaged.

The built-in fuse can not be replaced. Installation of an external fuse is recommended.

Outer dimensions

RD-05

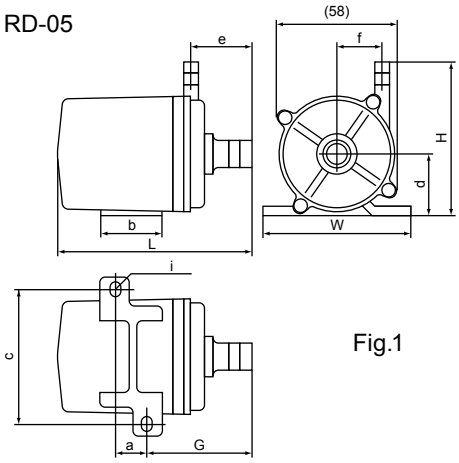

Fig.1

RD-05H

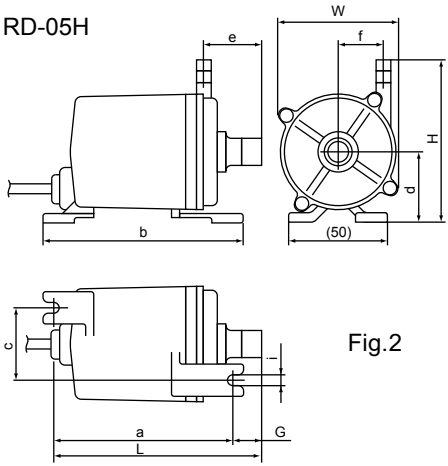

Fig.2

RD-20/-30

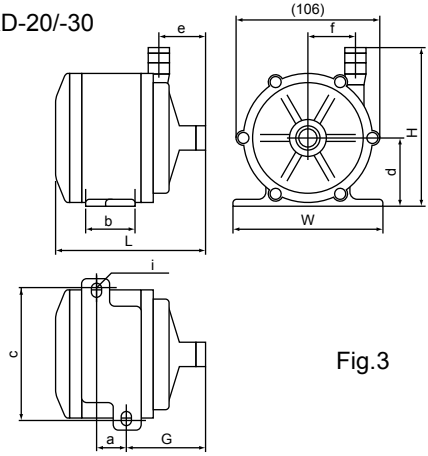

Fig.3

Unit (mm)

Model	W	H	L	a	b	c	d	e	f	G	I	Fig
RD-05	76	75	94.5	16	30	64	30	29.5	22.4	50.5	2-5×7	1
RD-05H	58	78	105	90	100	35	33			15	2-6	2
RD-20/-30	112	119	110	22	37	97	49	35	36	59.5	2-6×8	3

RD-12/-12Z Tube

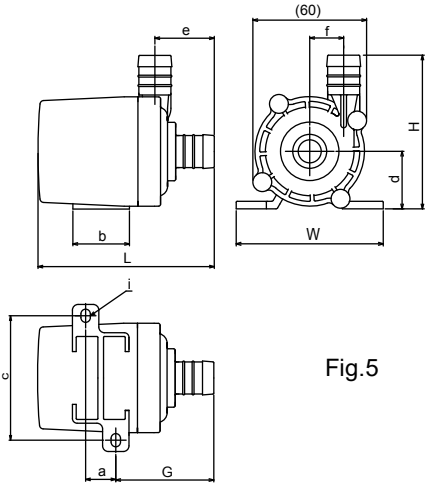

Fig.5

RD-12/-12Z NPT pipe thread

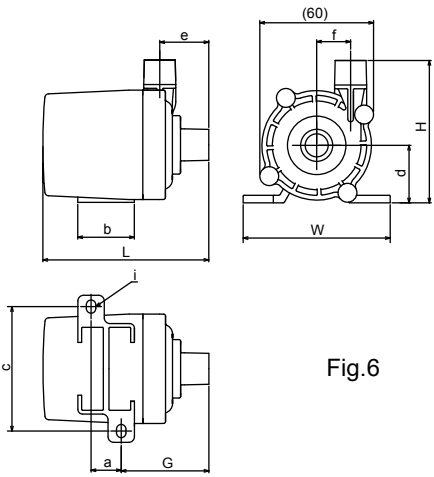

Fig.6

RD-12/-12Z Quick fastener

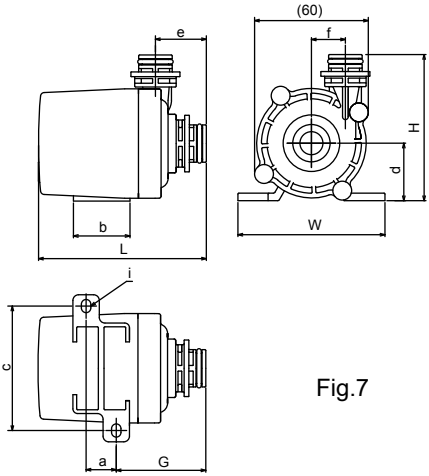

Fig.7

Unit (mm)

Model	Connection	W	H	L	a	b	c	d	e	f	G	i	Fig
RD-12	Tube	78	81.5	93.5	16	30	66	30.5	31.5	18	52	2-5×7	5
	NPT pipe thread		75.5	88					26		46.5		6
	Quick fastener		77.5	89					27		47.5		7
RD-12Z	Tube		79.5	93.5					31.5	19.8	52		5
	NPT pipe thread		75.5	88					26		46.5		6
	Quick fastener		77.5	89					27		47.5		7

Performance curves

■ RD-05

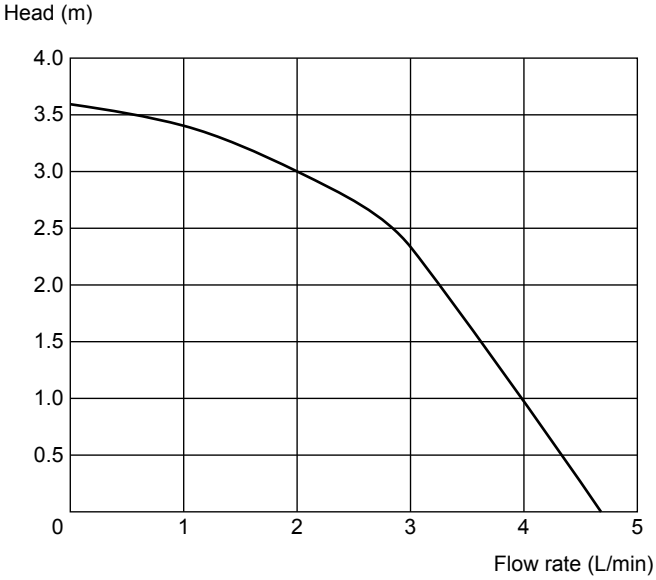

■ RD-05H

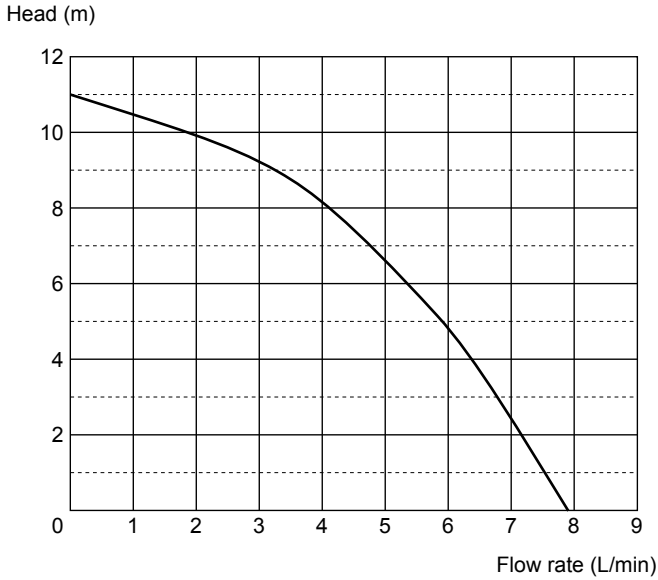

*For the RD-05H, operating noise becomes greater than normal when the discharge head is at or below 2m.

■ RD-12

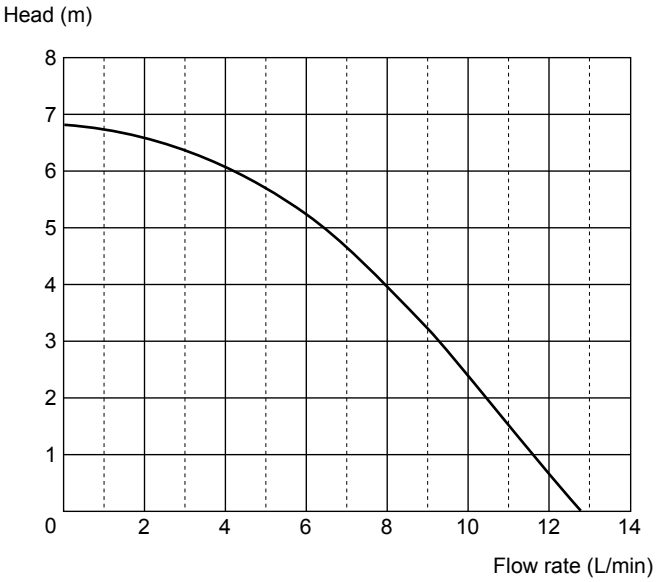
Head (m)
8
7
6
5
4
3
2
1
0
2
4
6
8
10
12
14
Flow rate (L/min)

■ RD-12Z

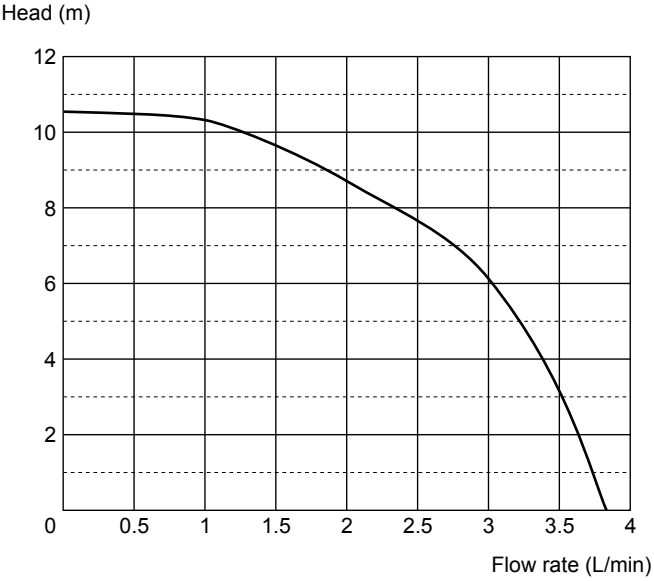
Head (m)
12
10
8
6
4
2
0
0.5
1
1.5
2
2.5
3
3.5
4
Flow rate (L/min)

■ **RD-20**

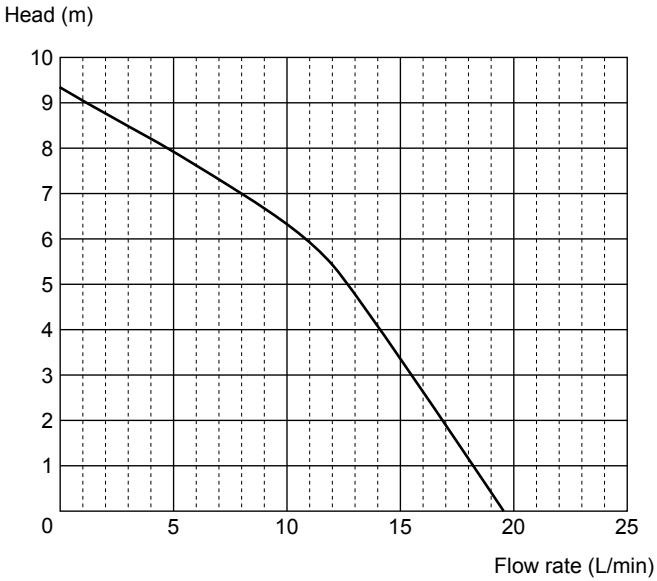

*For the RD-20, operating noise becomes greater than normal when the discharge head is at or below 4m.

■ **RD-30**

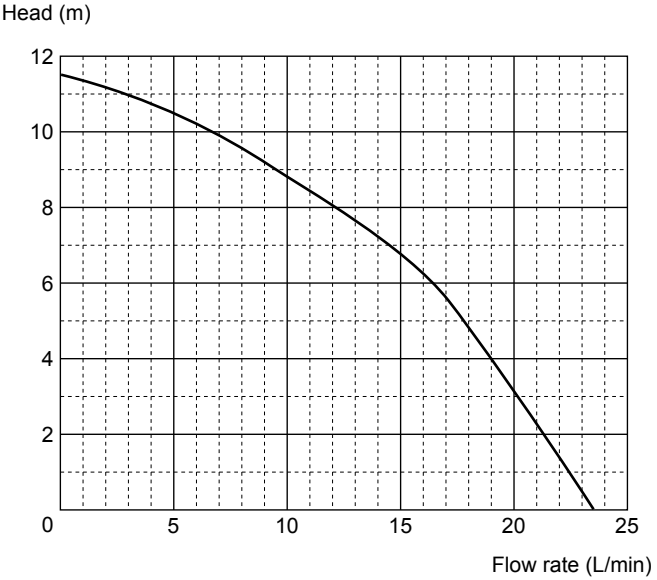

*For the RD-30, operating noise becomes greater than normal when the discharge head is at or below 5m.

■ **RD-05/-05H**

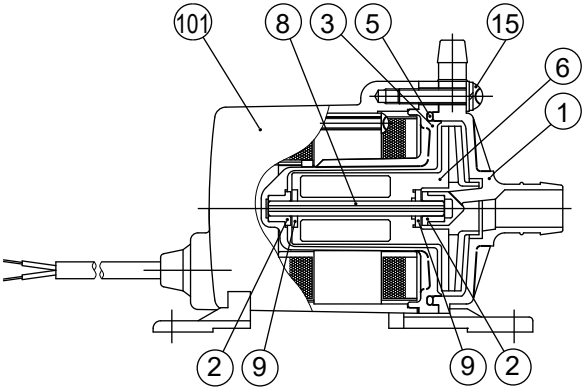

No.	Part names	Q'ty	Materials
1	Front casing	1	PPE
2	Bearing	2	PPS or PTFE
3	Rear casing	1	PPE
5	O ring	1	FKM or EPDM
6	Impeller	1	GFRPP
8	Spindle	1	Alumina ceramic
9	Thrust ring	2	Alumina ceramic
15	Machine screw w/ PW & SW	4	Stainless steel
101	Motor	1	—

■ **RD-12/-12Z**

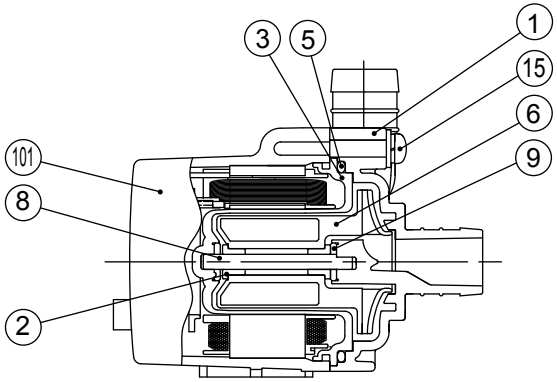

No.	Part names	Q'ty	Materials
1	Front casing	1	PPS
2	Bearing	2	PTFE
3	Rear casing	1	PPS
5	O ring	1	FKM or EPDM
6	Impeller	1	PPS
8	Spindle	1	Alumina ceramic
9	Thrust ring	2	Alumina ceramic
15	Machine screw w/ PW & SW	4	Stainless steel
101	Motor	1	—

■ **RD-20/-30**

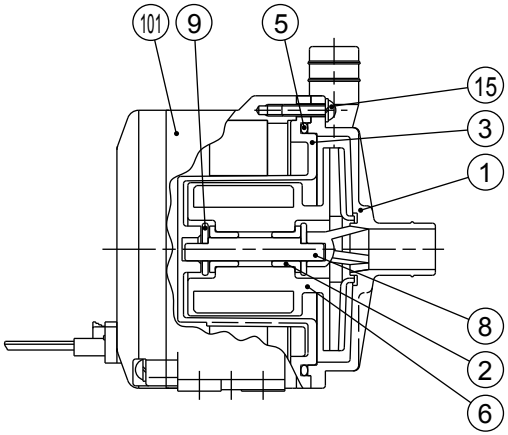

No.	Part names	Q'ty	Materials
1	Front casing	1	PPE
2	Bearing	2	PTFE
3	Rear casing	1	PPE
5	O ring	1	FKM or EPDM
6	Impeller	1	GFRPP
8	Spindle	1	Alumina ceramic
9	Thrust ring	2	Alumina ceramic
15	Machine screw w/ PW & SW	6	Stainless steel
101	Motor	1	—

EC DECLARATION OF CONFORMITY

A copy of the original Declaration of Conformity

(SUPPLIER'S NAME)

WE

IWAKI CO.,LTD.

(ADDRESS)

6-6 2-CHOME KANDA-SUDACHO CHIYODA-KU TOKYO JAPAN

(PRODUCT)

DECLARE UNDER OUR SOLE RESPONSIBILITY THAT THE PRODUCTS

DIRECT DRIVE PUMP

(MODEL NAME)

RD-05/05H/12/12Z/20/30 SERIES

TO WHICH THIS DECLARATION RELATES ARE IN CONFORMITY
WITH THE FOLLOWING STANDARDS OR DIRECTIVES AS FAR AS APPLICABLE

(DIRECTIVES)

MACHINERY DIRECTIVE 2006/42/EC (ANNEX IIA)
RoHS DIRECTIVE 2011/65/EU

(STANDARDS)

EN ISO12100:2010 EN809:1998+A1:2009 EN IEC63000:2018

(A PERSON WHO IS AUTHORISED TO COMPILE THE TECHNICAL FILE
IN THE COMMUNITY)

IWAKI EUROPE GMBH
SIEMENSRING 115 D-47877 WILLICH GERMANY

NOTE: THIS DECLARATION BECOMES INVALID IF TECHNICAL OR OPERATIONAL MODIFICATIONS ARE INTRODUCED WITHOUT THE MANUFACTURER'S CONSENT.

T. Sawada.

TSUTOMU SAWADA
DEPUTY SENIOR GENERAL MANAGER,
QUALITY ASSURANCE HEAD OFFICE

Tokyo, Sep. 13, 2021

(PLACE AND DATE OF ISSUE) **(NAME AND SIGNATURE OR EQUIVALENT MARKING OF AUTHORIZED PERSON)**

DOCUMENT NO. IS-51K-471-4

EC DECLARATION OF CONFORMITY

A copy of the original Declaration of Conformity

(SUPPLIER'S NAME)

WE

IWAKI CO.,LTD.

(ADDRESS)

6-6 2-CHOME KANDA-SUDACHO CHIYODA-KU TOKYO JAPAN

(PRODUCT)

DECLARE UNDER OUR SOLE RESPONSIBILITY THAT THE PRODUCTS

DIRECT DRIVE PUMP

(MODEL NAME)

RD-12/12Z SERIES (WITH EMC CONFORMITY)

TO WHICH THIS DECLARATION RELATES ARE IN CONFORMITY
WITH THE FOLLOWING STANDARDS OR DIRECTIVES AS FAR AS APPLICABLE

(DIRECTIVES)

MACHINERY DIRECTIVE 2006/42/EC (ANNEX IIA)
EMC DIRECTIVE 2014/30/EU
RoHS DIRECTIVE 2011/65/EU

(STANDARDS)

EN ISO12100:2010 EN61000-6-2:2005 EN IEC63000:2018
EN809:1998+A1:2009 EN61000-6-4:2007+A1:2011

(A PERSON WHO IS AUTHORISED TO COMPILE THE TECHNICAL FILE IN THE COMMUNITY)

IWAKI EUROPE GMBH
SIEMENSRING 115 D-47877 WILLICH GERMANY

NOTE: THIS DECLARATION BECOMES INVALID IF TECHNICAL OR OPERATIONAL MODIFICATIONS ARE INTRODUCED WITHOUT THE MANUFACTURER'S CONSENT.

T. Sawada.

TSUTOMU SAWADA
DEPUTY SENIOR GENERAL MANAGER,
QUALITY ASSURANCE HEAD OFFICE

Tokyo, Mar. 3, 2022

(PLACE AND DATE OF ISSUE) **(NAME AND SIGNATURE OR EQUIVALENT MARKING OF AUTHORIZED PERSON)**

DOCUMENT NO. IS-51K-606

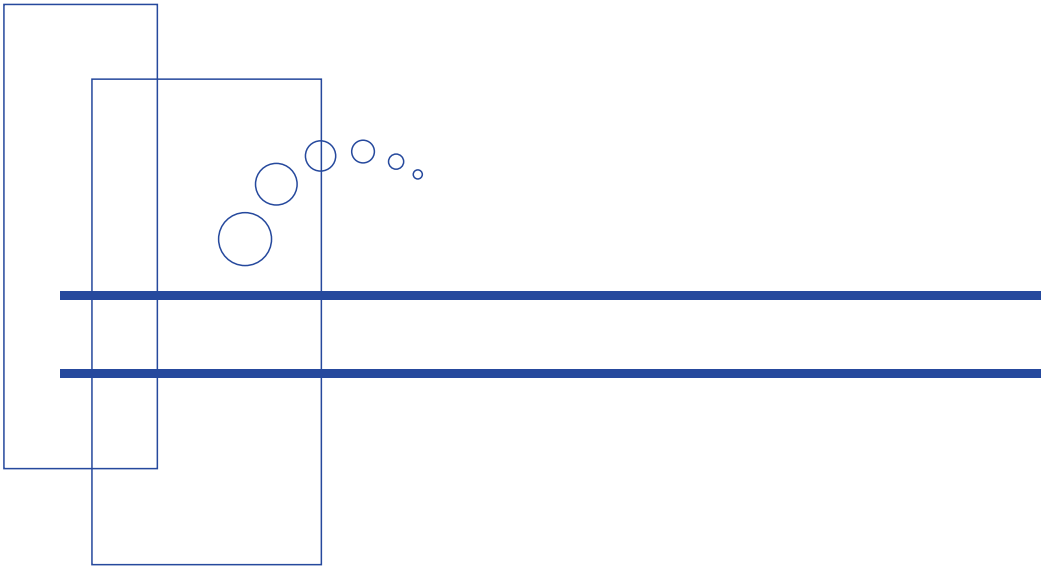

https://www.iwakipumps.jp

IWAKI CO.,LTD. 6-6 Kanda-Sudacho 2-chome Chiyoda-ku Tokyo 101-8558 Japan
TEL: +81 3 3254 2935 FAX: +81 3 3252 8892

European Headquarter / IWAKI Europe GmbH
TEL: +49 2154 9254 0 FAX: +49 2154 9254 48

Germany / IWAKI Europe GmbH
TEL: +49 2154 9254 50 FAX: +49 2154 9254 55

The Netherlands / IWAKI Europe GmbH (Netherlands Branch)
TEL: +31 74 2420011 FAX: +49 2154 9254 48

Italy / IWAKI Europe GmbH (Italy Branch)
TEL: +39 0445 561219 FAX: +39 0445 569088

Spain / IWAKI Europe GmbH (Spain Branch)
TEL/FAX: +34 934 741 638

Poland / IWAKI Europe GmbH (East Europe Branch)
TEL: +48 12 347 0755 FAX: +48 12 347 0900

Denmark / IWAKI Nordic A/S
TEL: +45 48 242345

Finland / IWAKI Suomi Oy
TEL: +358 10 201 0490

Norway / IWAKI Norge AS
TEL: +47 23 38 49 00

Sweden / IWAKI Sverige AB
TEL: +46 8 511 72900

Belgium / IWAKI Belgium N.V.
TEL: +32 13 670200 FAX: +32 13 672030

France / IWAKI France S.A.
TEL: +33 1 69 63 33 70 FAX: +33 1 64 49 92 73

U.S.A. / IWAKI America Inc.
TEL: +1 508 429 1440 FAX: +1 508 429 1386

Brazil / IWAKI Do Brasil Comercio De Bombas Hidraulicas LTDA.
TEL/FAX: +55 19 3244 5900

China (Shanghai) / IWAKI Pumps (Shanghai) Co., Ltd.
TEL: +86 21 6272 7502 FAX: +86 21 6272 6929

China (Hong Kong) / IWAKI Pumps Co., Ltd.
TEL: +852 2607 1168 FAX: +852 2607 1000

China (Guangzhou) / GFTZ IWAKI Engineering & Trading Co., Ltd.
TEL: +86 20 84350603 FAX: +86 20 84359181

China (Shenzhen) / IWAKI Pumps (Shenzhen) Co., Ltd.
TEL: +86 0755 8656 3696

Singapore / IWAKI Singapore Pte Ltd.
TEL: +65 6316 2028 FAX: +65 6316 3221

Indonesia / IWAKI Singapore Pte Ltd. (Indonesia Office)
TEL: +62 21 6906606 FAX: +62 21 6906612

Malaysia / IWAKIm SDN. BHD.
TEL: +60 3 7803 8807 FAX: +60 3 7803 4800

Korea / IWAKI Korea Co., Ltd.
TEL: +82 2 6238 4800 FAX: +82 2 6238 4801

Taiwan / IWAKI Pumps Taiwan Co., Ltd.
TEL: +886 2 8227 6900 FAX: +886 2 8227 6818

Thailand / IWAKI (Thailand) Co., Ltd.
TEL: +66 2 322 2471 FAX: +66 2 322 2477

Australia / IWAKI Pumps Australia Pty Ltd.
TEL: +61 2 9899 2411 FAX: +61 2 9899 2421

T1167-2 '26/09