Iwaki Hicera Pump

V-05/-10/-15 (Speed Control Motor Type)

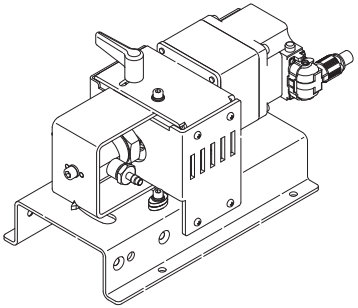

Instruction manual

Thank you for choosing our product.

⚠ Please read through this instruction manual before use.

This instruction manual describes important precautions and instructions for the product. Always keep it on hand for quick reference.

© 2025 IWAKI CO., LTD.

T1271-1 '26/09

Contents

Order Confirmation **2**
Safety Instructions **2**
WARNING **2**
CAUTION **3**
Precautions for Use **4**
Overview **5**
Part Names **5**
Identification Codes **6**
Installation **6**
Pump Mounting **6**
Plumbing **7**
Main port *8*
Flushing port *8*
Wiring **9**
Motor *9*
Grounding *9*
Operation **10**
Starting the pump *10*
Stoppage *10*
Maintenance **11**
Troubleshooting **11**
Inspection **12**
Daily inspection *12*
Greasing (plunger pin) *12*
Wear Parts Replacement **13**
Wear part list *13*
Exploded view *14*
Disassembly & Assembly *17*
Specifications/Outer Dimensions **22**
Specifications *22*
Outer dimensions *23*
EC DECLARATION OF CONFORMITY **24**

Order Confirmation

a. Check the nameplate to see if the information such as model codes is as ordered.

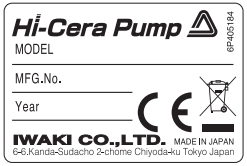

b. Check for transit damage and loose bolts.

*The CE marking on our product(s) is for us to market the product(s) into the European market, however, the CE marking does not ensure any safety or conformity of the product(s) outside the European market. When the pump is incorporated into the equipment marketed in the European market, such equipment must meet all the requirements of applicable directives.
In such a case, any person who places the equipment on the market must carry a CE mark on the equipment as a manufacturer.

Safety Instructions

Read through this section before use. This section describes important information for you to prevent personal injury or property damage.

■ Symbols

⚠**WARNING**	Indicates mishandling could lead to a fatal or serious accident.
⚠**CAUTION**	Indicates mishandling could lead to personal injury or property damage.

⚠Export Restrictions

Technical information contained in this instruction manual might be treated as controlled technology in your countries, due to agreements in international regime for export control.
Please be reminded that export license/permission could be required when this manual is provided, due to export control regulations of your country.

⚠WARNING

Turn off power before service
Risk of electrical shock. Be sure to turn off power to stop the pump and related devices before service is performed. Prevent others from restoring power during service.


Turn Off Power

Stop operation
If you notice any abnormal or dangerous conditions, suspend operation immediately and inspect/solve problems.



Do not use the pump in any condition other than its intended purpose
The use of the pump in any conditions other than those clearly specified may result in failure or injury. Use this product in specified conditions only.


Prohibited

Do not modify the pump
Alterations to the pump carry a high degree of risk. It is not the manufacturer's responsibility for any failure or injury resulting from alterations to the pump.


Do not rework or alter

Wear protective clothing
Always wear protective clothing such as an eye protection, chemical resistant gloves, a mask and a face shield during disassembly, assembly or maintenance work. The specific solution will dictate the degree of protection. Refer to SDS precautions from the solution supplier.


Wear protectors

Do not damage the power cable
Do not pull, knot, or crush the power cable. Damage to the power cable could lead to a fire or electrical shock if cut or broken.


Caution

⚠CAUTION

Qualified personnel only
The pump should be handled or operated by qualified personnel with a full understanding of the pump. Any person not familiar with the product should not take part in the operation or maintenance of the pump.



Use specified power only
Do not apply power other than that specified on the nameplate. Otherwise, failure, fire or electrical shock may result. Ensure the pump is properly grounded.



Do not run pump dry
Do not run the pump dry for more than 3 minutes (even during degassing). Otherwise, frictional heat may build up and cause the plunger to seize in the cylinder. Optimize your system to eliminate any possibility of dry running.


Caution

Do not close the suction or discharge line during operation
Operating the pump with a closed suction or discharge line can cause abnormal pressure buildup, resulting in damage to the pump, piping, and system components.


Prohibited

Keep electric parts and wiring dry
Risk of fire or electric shock. Install the pump where it can be kept dry.


Prohibited

Ventilation
Fumes or vapours can be hazardous with certain solutions. Ensure proper ventilation at the operation site.


Caution

Do not install/store the pump:
• In a flammable atmosphere. • In a dusty/humid environment.
• Where ambient temperature can exceed 0-40ºC.
• In direct sunlight or wind & rain.


Prohibited

Electromagnetic precautions
This product is not protected against electromagnetic fields. Take appropriate measures as necessary.



Spill precautions
Ensure protection and containment of solution in the event of plumbing or pump damage (secondary containment).



Do not use the pump in a wet location
The pump is not waterproof. Use of the pump in wet or extremely humid locations could lead to electric shock or short circuit.


Prohibited

Grounding
Risk of electric shock! Always properly ground the pump. Conform to local electric codes.


Grounding

Install a GFCI (earth leakage breaker)
An electrical failure of the pump may adversely affect other devices on the same line. Purchase and install a GFCI (earth leakage breaker) separately.


Electrical shock

Preventative maintenance
Follow instructions in this manual for replacement of wear parts. Do not disassemble the pump beyond the extent of the instructions.



Do not use a damaged pump
Use of a damaged pump could lead to an electric shock or death.


Prohibited

Disposal of a used pump
Dispose of any used or damaged pump in accordance with local rules and regulations. If necessary, consult a licensed industrial waste disposal company.



Install a relief valve
If the discharge line's pressure rating cannot withstand the maximum possible pressure, install a relief valve to depressurize the line. The relief valve set pressure must not exceed the discharge line's maximum allowable pressure.



Do not touch the pump or pipe with bare hands
Risk of burns. The surface temperature of the pump or piping becomes very high during and immediately after operation.


Caution

Precautions for Use

- Anchor the pump with four M5 bolts so it doesn't vibrate. If necessary, install vibration isolators for additional stability.
- When two or more pumps are installed together, vibration may be significant, resulting in poor performance or failure. Select a solid foundation (concrete) and fasten anchor bolts securely to prevent vibration during operation.
- Allow sufficient space around the pump for easy access and maintenance.
- Install the pump as close to the supply tank as possible.
- Observe the maximum suction lift of 4 meters (13.1 feet) when using clean water. Note that this value may vary depending on the liquid's characteristics.
- This pump can handle viscous liquids exceeding 500 mPa·s when operated at sufficiently low motor speed. For details, contact us or your authorized dealer.
- Do not pump slurry, as this may cause severe damage and lead to pump failure in a short period of time.
- When transferring crystalline or adhesive liquids, select a pump equipped with flushing ports and use them to prevent plunger seizure.
  The plunger may seize while the pump is stopped. After stopping the pump, disassemble the pump head and clean its internal components thoroughly.
- Use care handling the pump. Do not drop. An impact may affect pump performance. Do not use a pump that has been damaged to avoid the risk of electrical damage or shock.
- Rotating parts of this pump are protected by SUS covers. Do not remove that protections.
- Observe the allowable liquid temperature range of 0-40ºC (32-104ºF).
- A small amount of fluid may flow back to the suction line when the plunger stops moving in the cylinder. To prevent backflow, either balance the discharge and suction line pressures or install a solenoid valve or check valve that operates in sync with the pump.
- Commissioning is required to expel air from the tubing before starting full operation.
- You can adjust the head angle from its default position. After each adjustment, measure the actual liquid volume per stroke and repeat until the desired volume is achieved (calibration). The head angle index on the front frame is provided only as a rough reference. Accurate head angle determination requires calibration every time the angle is changed. Always stop the pump before making adjustments.
- Solution in the discharge line may be under pressure. Release the pressure from the discharge line before disconnecting plumbing or disassembly of the pump to avoid solution spray.
- Wear protective clothing when handling or working with pumps. Consult solution SDS for appropriate precautions. Do not come into contact with residual solution.
- A slight amount of leakage may occur from the plunger lip seal depending on liquid characteristics.
- Do not allow foreign matters to enter the pump. Clogging may cause the plunger to be locked or damaged.
- Do not clean the pump or nameplate with a solvent such as benzine or thinner. This may discolour the pump or erase printing. Use a dry or damp cloth or a neutral detergent.
- Always stop the pump with the plunger fully extended to prevent liquid from remaining in the cylinder.
- Using flammable, harmful, or corrosive chemical liquids may pose a hazard if a slight leak occurs from the plunger lip seal or the relief valve on the discharge line. To ensure safety, provide a drain line in your system so that any leaked liquid can be safely collected or drained at any time during operation or shutdown.



In accordance with the European Directive 2012/19/EU on waste electrical and electronic equipment (WEEE), this product features the crossed-out wheelie bin symbol. When this product is disposed of in household wastes, toxic components included in it can cause major environmental and human health problems. Use appropriate waste collection systems for recovery and recycling. Contact your local distributor or nearest Iwaki company for the detailed collection systems.

Overview

An Iwaki Hicera pump is a metering pump equipped with fine ceramic wet-end components, such as a plunger, a cylinder, and other related parts. The plunger reciprocates and rotates within the cylinder, drawing liquid in through the suction line and discharging it through the outlet line.

Principle of operation

During the suction process, the rotating plunger retracts to draw liquid into the cylinder from the suction line as its duct aligns with the inlet.

During the discharge process, the rotating plunger extends to expel liquid from the cylinder to the discharge line as its duct aligns with the outlet.

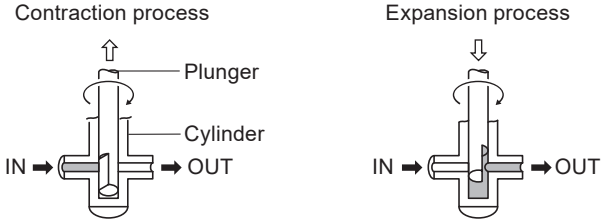

⇨: Plunger reciprocation
→: Plunger rotation
➡: Flow direction

Part Names

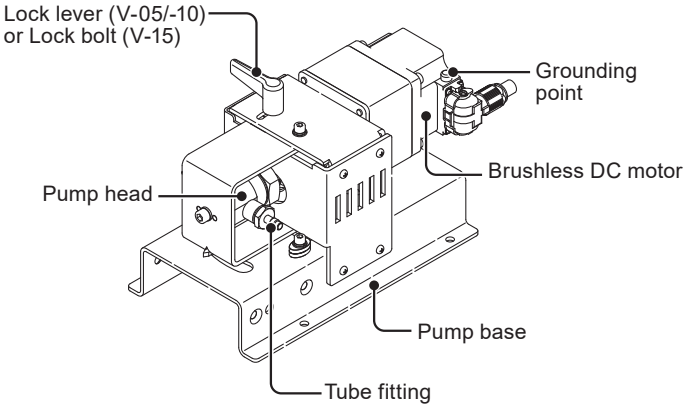

Identification Codes

The model codes indicate the following details:

V - 05 S S P 1 - X V 100
a b c d e f g h i

a. Series name
V: Hicera pump

b. Plunger diameter
05: ø5 mm 10: ø10 mm 15: ø15 mm

c. Plunger/Cylinder
S: SiC/SiC (for V-05/-10/-15) A: Al_2O_3/Al_2O_3 (for V-10/-15)

d. Wet end materials
S: SUS304 (machined for V-05/-10) or SUS316 (machined for V-15)

e. Flushing port
P: Pumps with flushing ports No code: No flushing ports

f. Main port
1: 6 mm O.D. SUS tube fitting (for V-05/-10)
2: 10 mm O.D. SUS tube fitting (for V-05/-10)
3: 13 mm O.D. SUS tube fitting (for V-15)
4: Rc¼" I.D. female adapter (for V-05/-10)
5: Rc⅜" I.D. female adapter (for V-15)

g. Special version
X: Customized model No code: Standard model

h. Motor specification
V: Speed control motor

i. Motor reduction ratio
100: 1/100 (for V-05) 10: 1/10 (for V-10/-15) 5: 1/5 (for V-10/-15)

Installation

Installation of the pump, tubing and wiring are described in this section.

! Points to be observed
Do not place explosive or flammable material near the pump.

Pump Mounting

1 Select an appropriate installation site

See the "Precautions for Use" section. Position the pump as close to the supply tank as possible.

*Observe the maximum suction lift of 4 meters (13.1 feet) when using clean water. Note that this value may vary depending on the liquid's characteristics.

*A slight amount of leakage may occur from the plunger lip seal depending on the liquid's characteristics. Install the pump so that the motor and surrounding equipment are protected from possible leakage.

2 Select a mounting direction

NOTE
Permissible mounting directions are limited. Installing the pump in any orientation other than the examples provided may result in reduced performance or equipment failure.

a. Installed in a horizontal position on its base. There are no limitations on the inlet and outlet directions.

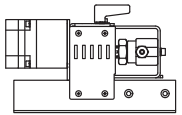

b. Installed in a horizontal position on its side. The inlet must be directed downwards to draw liquid in and deliver it upwards.

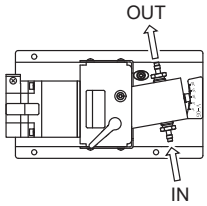

c. Installed in a vertical position on its head. The inlet must be directed downwards to draw liquid in and deliver liquid upwards.

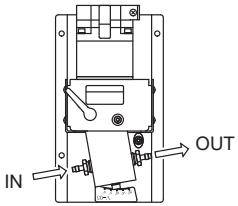

3 **Anchor the pump by the M5 bolts**

Be sure to fix the pump at four points.

NOTE

- If necessary, install vibration isolators for additional stability.
- The V-05 pump head has a small volume, which contributes to its low output. When installed horizontally on its base, air trapped in the pump head is not effectively purged. To facilitate the removal of entrained air and improve performance, install the pump either horizontally on its side or vertically on its head.

Plumbing

Observe the following points for plumbing.

- To minimize pipe resistance, ensure the tubing length is kept to a minimum and avoid unnecessary bends.
- Seal both the suction and discharge lines completely to prevent air from entering the flow. An imperfect suction connection can entrain air and significantly reduce performance.
- Purchase a separate tube that matches the main port size—6 mm O.D. or 10 mm O.D. for the V-05 and V-10, or 13 mm O.D. for the V-15.
  Alternatively, you may use an Rc¼" I.D. female adapter for the V-05 and V-10, or an Rc⅜" I.D. female adapter for the V-15 to connect the pump to your tubing or piping system.
  For the pumps equipped with the flushing port, use a tube that matches the flushing port joint (4 mm O.D. for the V-10, or 6 mm for the V-15).
  Such tubes should be resistant to pressure and corrosion under the specified operating conditions.
- The main port joint seal (and the flushing port joint seal if equipped) builds up a face seal coupling between each port and the pump head. Do NOT apply thread seal tape to the threads of the main port joint or the flushing port joint, as this may interfere with proper face sealing and compromise the seal integrity.
- Install a shutoff valve in the suction line when the pump is installed in a flooded suction system.

NOTE

Ensure that the main port joint and the flushing port joint do not loosen during operation. If necessary, tighten them to 1.5 N·m to ensure proper face sealing.

Main port

■ **Tube fitting**

1 **Use the tube that matches the main port joint**

Push tubes in fully to ensure a proper seal and prevent air from entering.

2 **Secure the tubes to the main port joints with a band to prevent them from coming off under pressure or external stress**

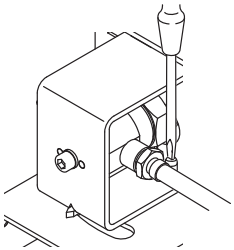

■ **Female adapter**

1 **Apply thread seal tape to the male threads of the appropriate tube or pipe fitting**

2 **Tighten the tube or pipe fitting to the Rc¼″ or Rc⅜″ female adapter to 5 N·m using a wrench and spanner**

Flushing port

Delivery of certain chemicals through the Main port may result in deposits—such as silica—forming between the cylinder and the plunger, which can cause the plunger to stick. To prevent this, set up a cleaning liquid circulation system via the Flushing port (CIP). This will help keep the plunger rotating freely, except when handling liquids that are excessively viscous or prone to settling.

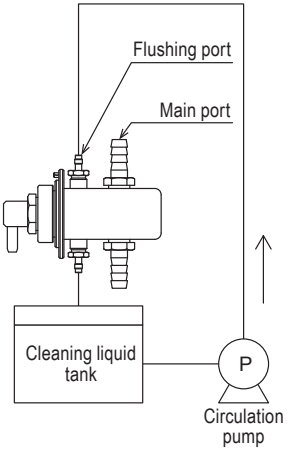

NOTE

Keep the Flushing ports tubed. Use a chemical resistant tubing or piping. Free Flushing ports can result in a chemical leak and also accelerate deposition (a locked plunger) as air is taken to dry up chemicals earlier.

■ **Tube fitting**

1 **Use a tube that matches the flushing port joint (if provided)**

Push tubes in fully to ensure a proper seal and prevent air from entering.

2 **Secure the tube to the flushing port joint with a band to prevent them from coming off under pressure or external stress**

3 **Establish and run the cleaning liquid circulation system**

Use clean water or a cleaning liquid that does not chemically react with the main liquid.

NOTE

- Select the appropriate pump and tank sizes.
- Replace the cleaning liquid regularly to maintain cleaning efficiency.
- Keep the cleaning liquid pressure lower than the main liquid pressure to prevent backflow into the main line.

NOTE

If the main liquid does not deposit and there is no risk of plunger lock, it is not necessary to maintain the cleaning liquid circulation system running. However, ensure the flushing ports are capped or looped to prevent chemical leakage. Note that looped tubing may become pressurized over time. Release the pressure before removing the tubing to avoid chemical spray.

Wiring

A speed controller must be purchased separately to control the motor speed of the pump.

Observe the following points

- Electrical work should be performed by a qualified electrician. Always observe applicable codes or regulations.
- Do not perform wiring work while electric power is ON. Otherwise, an electrical shock or a short circuit may result. Be sure to turn off the power before wiring work.

Motor

This pump is equipped with a BLDC motor. Select the appropriate controller according to the pump model and motor power rating for optimal performance.

■ **Motor controller**

Pump	Motor powers	Controllers
V-05/V-10	1-phase 100 VAC	BMUD30-A2
V-05/V-10	1- or 3-phase 200 VAC	BMUD30-C2
V-15	1-phase 100 VAC	BMUD60-A2
V-15	1- or 3-phase 200 VAC	BMUD60-C2

Grounding

Ground the pump at the designated grounding point (screw). Use a lug terminal to crimp or solder the grounding wire.

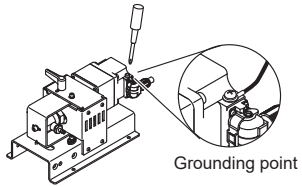

Operation

Points to be observed
Do not run pump dry or with the discharge valve or suction valve closed longer than 3 minutes.

Starting the pump

1 **Check if plumbing and wiring are done correctly**

2 **Check the spec label to see that the power supply voltage is correct**

3 **Fully open the suction and discharge valves**

4 **Prime and run the pump for testing**

Check if the flow direction (drive shaft) is correct.

*When the drive shaft rotates clockwise (as viewed from the pump head), the liquid flows toward direction “a”.
*When the drive shaft rotates counterclockwise, the liquid flows toward direction “b”.
*For the V-05 with the 1/100 motor reduction ratio, the drive shaft rotates in the opposite direction of the motor rotation.

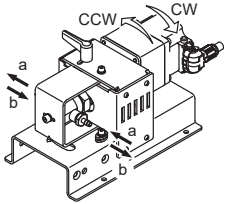

5 **Check that the liquid is flowing properly**

If you notice any abnormalities, turn off the power immediately and investigate the root cause. Refer to the Troubleshooting section on the next page for guidance.

6 **Turn off the pump, release the lock lever (or the lock bolt for V-15), and adjust the pump head angle to the maximum allowable 20°**

7 **Run the pump with an open-ended discharge line (zero pressure) until all gas is purged from the pump and tubing**

This step is especially important when the pump is being used for the first time in a plumbing system.

8 **Adjust the pump head to the optimal angle**

Adjust the pump head angle within the range of 0° (zero flow) to 20° (maximum flow), then fasten the lock lever or lock bolt.

*Do not attempt to adjust the pump head angle beyond the 0° to 20° range.

NOTE

Take appropriate measures to prevent debris from entering the pump, as this can cause the plunger to seize or lead to pump failure.

Stoppage

1 **Flush the pump head with clean water through the main port and the flushing ports (CIP) after delivering any sticky or settling liquid**

Take apart and clean the pump head manually (COP) as needed.

2 **Before any extended stoppage (one week or longer), disassemble and clean the pump head manually (COP)**

Maintenance

This section covers troubleshooting, inspection, replacing wear parts, exploded views, and specifications.

Important

Follow instructions in this manual for replacement of wear parts. Do not disassemble the pump beyond the extent of the instructions.

Troubleshooting

First check the following points. If these steps do not solve the problems, contact us or your nearest distributor.

States	Possible causes	Solutions
Pump does not start.	Power is not supplied.	• Supply power.
	Incorrect wiring or disconnection	• Correct wiring.
	Plunger lock due to crystallization*	• Take apart the pump head and clean wet ends.
	High specific gravity or viscosity	• Select a pump model suitable for high-viscosity liquids.
	Clogging caused by foreign matters	• Remove foreign matters. Replace damaged parts.
Pump does not deliver liquid during operation.	Pump runs dry.	• Stop the pump and check the plunger and cylinder for damage. Replace them if needed.
	A suction or a discharge line is closed during operation.	• Open both suction and discharge lines.
	Collapsed suction line	• Use pressure-resistant tubing.
	Supply tank is empty.	• Refill the supply tank.
	Motor rotates in reverse.	• Correct the rotational direction using the user controller.
Flow rate is too low.	Air ingress through a tube joint	• Ensure all tube joints are airtight.
	Cavitation occurs.	• Build a flooded suction system. • Reduce a motor speed, liquid temperature, and tubing resistance.
	Pump rotation speed is too low.	• Increase rotation speed.
	Lip seal is damaged or missing.	• Replace as necessary.
Significant vibration or noise.	Pump runs dry.	• Stop the pump and check plunger and cylinder for damage. Replace if needed.
	Discharge pressure is too high.	• Reduce discharge pressure.
	A suction or a discharge line is closed during operation.	• Open both the suction and discharge lines.
	Air ingress through a tube joint	• Ensure all tube joints are airtight.
	Cavitation occurs.	• Build a flooded suction system. • Reduce motor speed, liquid temperature, and tubing resistance.
	Supply tank is empty.*	• Refill the supply tank.
	Anchor bolts are loose.*	• Fasten anchor bolts.
	Resonance between the pump and other system components.	• Install vibration isolators to baseplate. • Reduce pump speed.
Liquid leaks.	Discharge pressure is too high.	• Reduce discharge pressure.
	A suction or a discharge line is closed during operation.	• Open both the suction and discharge lines.
	Lip seal is damaged or missing.	• Replace as necessary.
Pump stops unintentionally.	Incorrect wiring or disconnection	• Correct wiring.
	Plunger lock due to deposits	• Take apart the pump head and clean wet ends.
	Clogging caused by foreign matters	• Remove foreign matters. Replace damaged parts.
	Discharge pressure is too high.	• Reduce discharge pressure.

*Causes marked with an asterisk are typical for this pump.

Inspection

Perform daily inspections to maintain pump performance and ensure safety.

Daily inspection

Check the following points. If you notice any abnormal or dangerous conditions, suspend operation immediately and inspect/solve problems according to the Troubleshooting section.
When wear parts reach the end of their service life, replace them with new ones. Contact us or your nearest distributor for details.

No.	States	Points to be checked	How to Inspect
1	Pumping	• If liquid is being pumped.	Flow meter or visual inspection
		• If a discharge and a suction pressures are within normal range.	Pressure gauge
2	Noise and Vibration	• If abnormal noise or vibration occurs. These may indicate abnormal operation. • If a sympathetic vibration occurs. Install vibration isolators to baseplate to reduce noise or oscillation as necessary. • If a friction noise occurs from between the spherical bearing and the plunger pin. It's a sign of less lubrication. Apply a molybdenum disulfide grease to the plunger pin every 6 months to maintain lubrication. See the Greasing section for details.	Visual or audio inspection
3	Air ingress	• If there is evidence of leakage. Locate and tighten any leak point as necessary. • If the pump takes in entrained air. Inspect the joints/lines for loose connections and tighten if necessary.	Visual inspection
4	High surface temperature	• Note the pump surface temperature may be high or low depending on the liquid temperature. • If the motor surface temperature is in the allowable range (the max ambient temperature plus 40°C at a maximum).	Touch the surface or use a thermometer

Greasing (plunger pin)

The plunger pin slides within the spherical bearing during operation. The sliding area between the parts must always be lubricated using the high-performance fluorinated grease shown below. Ensure proper lubrication every six months or whenever the pump head is disassembled (except under harsh operating conditions, which require shorter intervals).

■ Greasing the plunger pin

1 **Take apart the pump head and take out the plunger**

See page 17 or later before taking apart the pump head.

2 **Use the fluorinated grease to the plunger pin**

The DuPont Toray Specialty Materials K.K MOLYKOTE HP-500 is used in our factory.

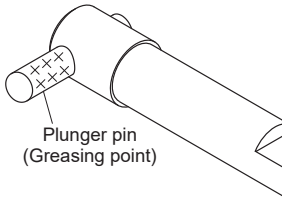

Wear Parts Replacement

To operate the pump for an extended period, wear parts must be replaced periodically. It is recommended to keep the following parts in stock for immediate replacement. For details, contact us or your nearest distributor.

Precautions

- Solution in the discharge line may be under pressure. Release the pressure from the discharge line before disconnecting plumbing or disassembly of the pump to avoid solution spray.
- Rinse wet ends thoroughly with clean water.
- Replace all wear parts whenever the pump head is disassembled.

Wear part list

V-05	Part names	Lip seal (9)	Main port joint seal (5)	Head seal (4)	Back seat (10)
		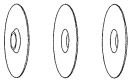			
	Design life	2000 hr	Every time the pump head is taken apart.		
	Q'ty	3	2	1	1
V-10	Part names	Lip seal (9)	Main port joint seal (5)	Head seal (4)	Back seat (10)
		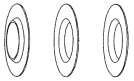			
	Design life	2000 hr	Every time the pump head is taken apart.		
	Q'ty	3	2	1	1
V-15	Part names	Lip seal (10)	Main port joint seal (6)	Head seal plate (4)	Seal stopper (11)
		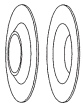			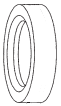
	Design life	2000 hr	Every time the pump head is taken apart.		When sealing performance is reduced.
	Q'ty	2	2	1	1

*Wear part life varies depending on pressure, temperature, and liquid characteristics.

*The design life is based on continuous operation with clean water at 0.3 MPa under ambient temperature conditions.

Exploded view

Refer to the exploded view below when disassembling or reassembling the pump. Do not disassemble the pump beyond what is shown in the exploded view.

■ V-05

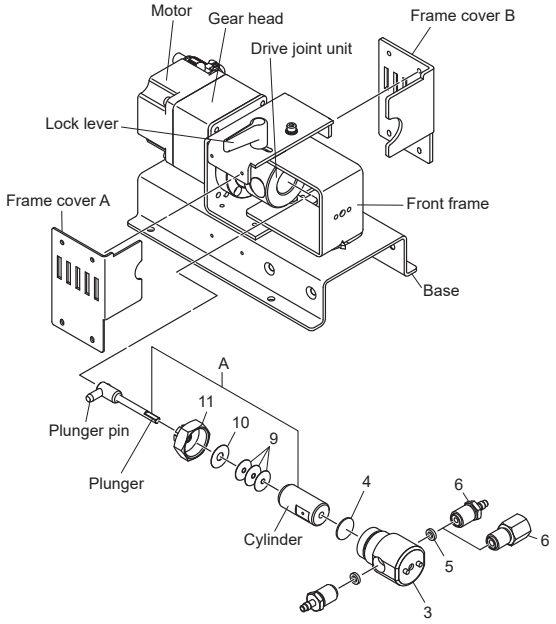

No.	Part names	Q'ty	Materials
A	Plunger unit	1	SiC
3	Pump head	1	SUS304
4	Head seal	1	PTFE
5	Main port joint seal	2	PTFE
6	Main port joint	2	SUS316
9	Lip seal	3	PTFE
10	Back seat	1	PTFE
11	Cap nut	1	SUS304

■ **V-10**

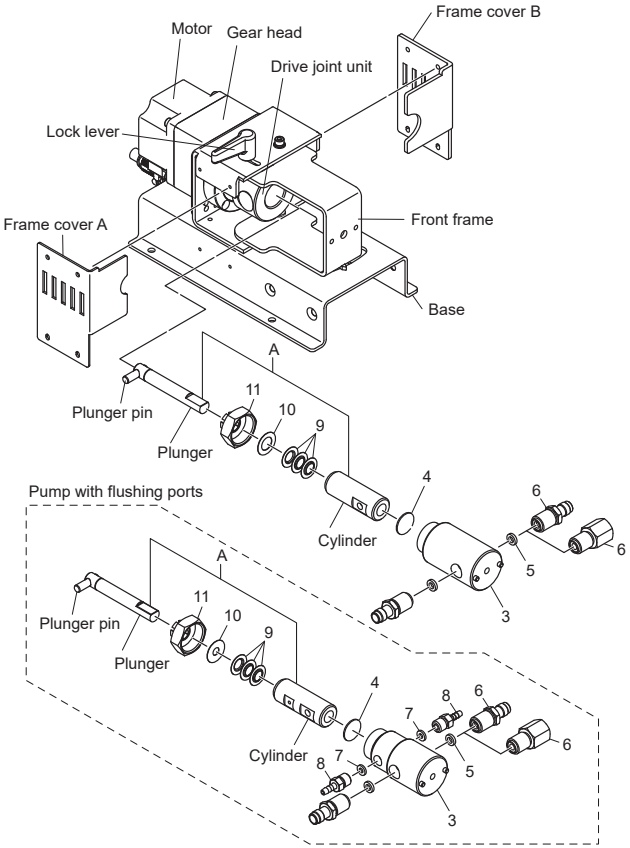

No.	Part names	Q'ty	Materials
A	Plunger unit	1	Al_2O_3/SiC
3	Pump head	1	SUS304
4	Head seal	1	PTFE
5	Main port joint seal	2	PTFE
6	Main port joint	2	SUS316
7	Flushing port joint seal	2	FKM
8	Flushing port joint	2	SUS316
9	Lip seal	3	PTFE
10	Back seat	1	PTFE
11	Cap nut	1	SUS304

■ **V-15**

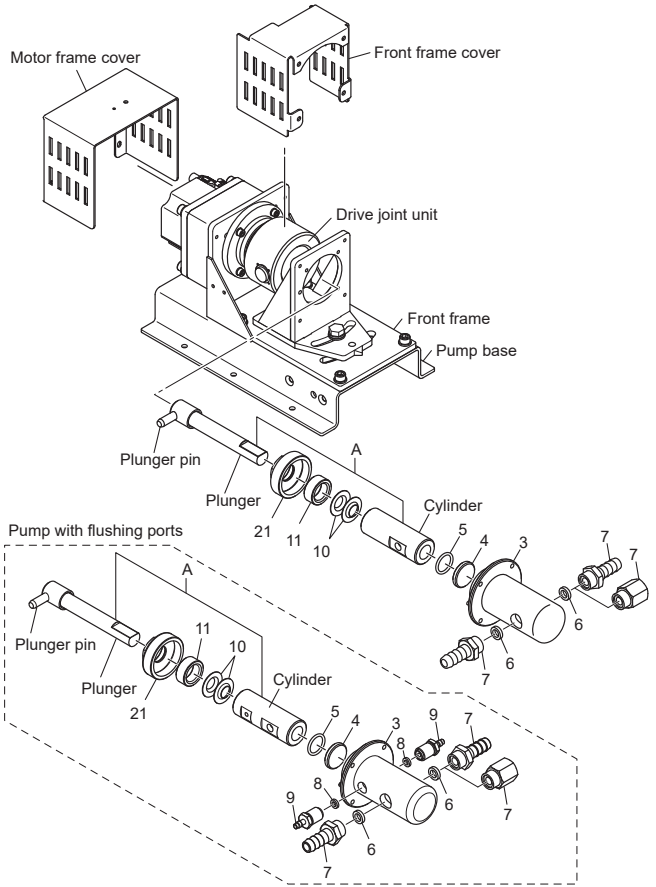

No.	Part names	Q'ty	Materials
A	Plunger unit	1	Al_2O_3/SiC
3	Pump head	1	SUS316
4	Head seal plate	1	PVDF
5	O ring	1	FKM
6	Main port joint seal	2	PTFE
7	Main port joint	2	SUS316
8	Flushing port joint seal	2	PTFE
9	Flushing port joint	2	SUS316
10	Lip seal	2	PTFE
11	Seal stopper	1	PVDF
21	Cap nut	1	SUS304

Disassembly & Assembly

■ Before service is performed

1 **Turn off power and stop the pump**

2 **Close the suction line to prevent fluid entry**

3 **Drain and completely empty the pump head and the discharge line**

4 **Clean the inside of the pump head thoroughly**

■ Disassembly (V-05/-10)

1 **Remove tube connections from the pump head**

NOTE

Solution in the discharge line may be under pressure. Release the pressure from the discharge line before disconnecting plumbing or disassembly of the pump to avoid solution spray.

2 **Remove the pump from its foundation**

3 **Adjust the pump head angle**

Release the lock lever (V-05/-10) or the lock bolt (V-15) to adjust the angle to the 20° position (the full stroke length).

4 **Remove the M5 (V-05) or M6 (V-10) hexagon socket head bolt to release the Pump head from the Front frame**

5 **Disconnect the Plunger pin from the spherical bearing to detach the Pump head from the Front frame**

Ensure the Plunger unit stays inside the Pump head during removal.

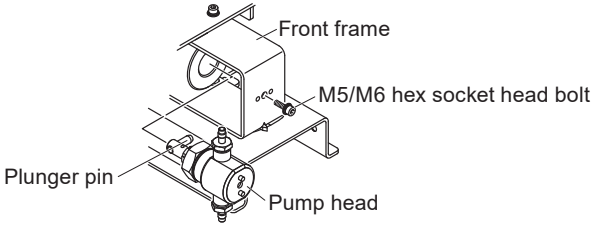

6 **Unscrew the Main port joints, and if provided, the Flushing port joints, from the Pump head**

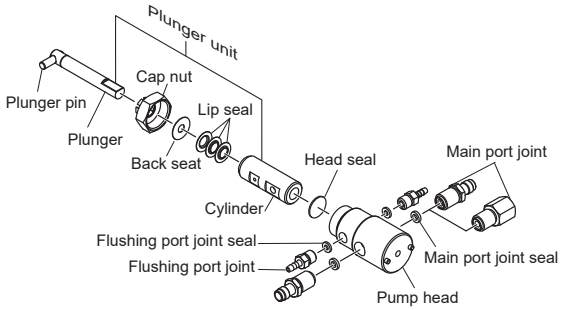

7 **Remove the Cap nut and the Plunger unit from the Pump head**

8 **Remove the Plunger from the Cylinder by rotating it slowly to avoid damage**

Be careful not to drop these ceramic parts.

9 **Slip the three Lip seals out of the Plunger with slow rotation**

10 **Remove the Head seal from the Pump head**

NOTE

- Be careful not to damage the Lip seals.
- Clean all parts thoroughly after disassembly.
- Use care handling the Plunger and Cylinder. Do not drop. An impact may damage these ceramic parts.

■ **Assembly (V-05/-10)**

1 **Place the Head seal onto the bottom of the pump head, followed by the Cylinder**

Ensure the Cylinder's ports align with the Main ports, and if provided, with the Flushing ports.

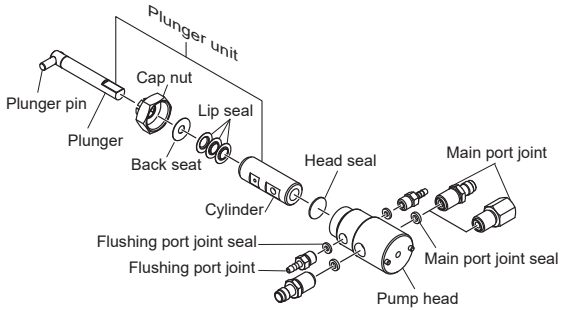

2 **Fit the Main port joint seal to the Main port joint, and hand-tighten the two Main ports into the Pump head**

If provided, repeat the procedure for the Flushing port joint seal and the Flushing port joint.

3 **Slide the Cap nut, Back seat, and Lip seals onto the Plunger in sequence, as far as they will go**

- Take the Lip seals one by one to softly rotate and slide onto the Plunger.
- See the right enlarged photo for the mounting direction of the Lip seals.

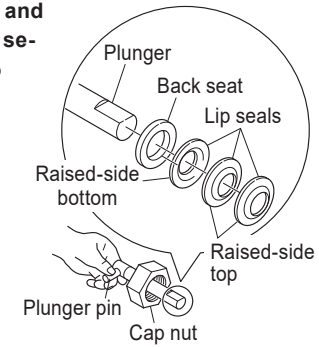

NOTE

- Do not bend or scratch the Lip seals with the edge of the Plunger.
- Degrease and clean the Plunger with benzine or thinner after this process.

4 **Hold the Plunger pin and pass the Plunger slowly through the Cylinder, rotating it clockwise and counter-clockwise**

NOTE

Do not allow the Plunger to rub against the Cylinder. It may become stuck or damaged.

5 **Tighten the Cap nut to the Pump head to 3.0 N·m**

NOTE

Do not overtighten, as this may damage the ceramic cylinder or interfere with plunger rotation.

6 **Tighten the Main port joint to the Pump head to 1.5 N·m**

If provided, repeat the procedure for the Flushing port joint seal and the Flushing port joint (1.5 N·m).

NOTE

Do not overtighten, as this may damage the ceramic cylinder or interfere with plunger rotation.

7 **Pull the Plunger slightly to apply an appropriate amount of lubricant to the Lip seal contact surface**

The BALBIS POWER GREEN Multi Purpose Lubricant is used in our factory.

8 **Move the Plunger back and forth about 10 times inside the Cylinder to ensure proper lubrication between the Plunger and the Lip seals**

9 **Pull out the Plunger end out of the Pump head and fit the Plunger pin into the spherical bearing**

Apply DuPont Toray Specialty Materials K.K. MOLYKOTE HP-500 to the Plunger pin to ensure proper lubrication.

10 **Place the pump head into the Front frame**

Secure the pump head at the top using a hexagon socket head bolt and tighten to a torque of 2.8 N·m.

■ **Disassembly (V-15)**

1 **Remove tube connections from the Pump head**

NOTE

Solution in the discharge line may be under pressure. Release the pressure from the discharge line before disconnecting plumbing or disassembly of the pump to avoid solution spray.

2 **Remove the pump from its foundation**

3 **Adjust the pump head angle**

Release the Lock bolt to adjust the angle to the 20° position (the full stroke length).

4 **Remove the four M4×10 hexagon socket head bolts to detach the Pump head from the Pump frame**

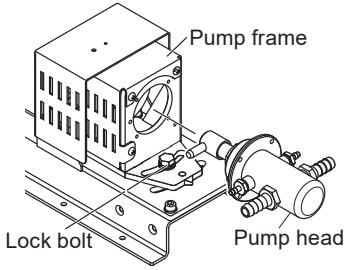

5 **Disconnect the Plunger pin from the spherical bearing to detach the Pump head**

Ensure the Plunger unit stays inside the Pump head during removal.

6 **Unscrew the Main port joints, and if provided, the Flushing port joints, from the Pump head**

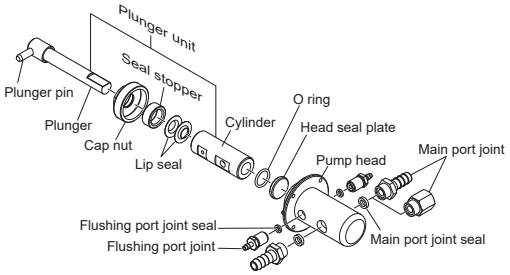

7 **Remove the Cap nut and the Plunger unit from the Pump head**

8 **Remove the Plunger from the Cylinder by rotating it slowly to avoid damage**

Be careful not to drop these ceramic parts.

9 **Slip the two Lip seals out of the Plunger with slow rotation**

10 **Remove the Head seal plate and the O ring from the Pump head**

NOTE

- Be careful not to damage the Lip seals.
- Clean all parts thoroughly after disassembly.
- Use care handling the Plunger and Cylinder. Do not drop. An impact may damage these ceramic parts.

■ **Assembly (V-15)**

1 **Place the Head seal plate, with the O ring in position, onto the bottom of the Pump head, followed by the Cylinder**

Ensure the Cylinder's ports align with the Main ports, and if provided, with the Flushing ports.

*The O ring on the Head seal plate must face the Cylinder.

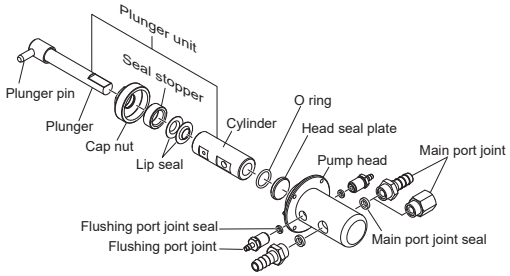

2 **Fit the Main port joint seal to the Main port joint, and hand-tighten the two Main ports into the Pump head**

If provided, repeat the procedure for the Flushing port joint seal and the Flushing port joint.

3 **Slide the Cap nut, Seal stopper, and Lip seals onto the plunger in sequence, as far as they will go**

- Take the Lip seals one by one to softly rotate and slide onto the Plunger.
- See the right enlarged photo for the mounting direction of the Lip seals.

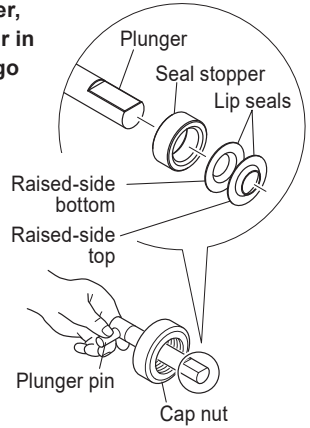

NOTE

- Do not bend or scratch the Lip seals with the edge of the Plunger.
- Degrease and clean the Plunger with benzine or thinner after this process.

4 **Hold the Plunger pin and pass the Plunger slowly through the Cylinder, rotating it clockwise and counter-clockwise**

NOTE

Do not allow the Plunger to rub against the Cylinder. It may become stuck or damaged.

5 **Tighten the Cap nut to the Pump head to 10.0 N·m**

NOTE

Do not overtighten, as this may damage the ceramic cylinder or interfere with plunger rotation.

6 **Tighten the Main port joint to the Pump head to 1.5 N·m**

If provided, repeat the procedure for the Flushing port joint seal and the Flushing port joint (1.5 N·m).

NOTE

Do not overtighten, as this may damage the ceramic cylinder or interfere with plunger rotation.

7 **Pull the Plunger slightly to apply an appropriate amount of lubricant to the Lip seal contact surface**

The BALBIS POWER GREEN Multi Purpose Lubricant is used in our factory.

8 **Move the Plunger back and forth about 10 times inside the Cylinder to ensure proper lubrication between the Plunger and the Lip seals**

9 **Pull out the Plunger end from the Pump head and fit the Plunger pin into the spherical bearing**

Apply DuPont Toray Specialty Materials K.K. MOLYKOTE HP-500 to the Plunger pin to ensure proper lubrication.

10 **Mount the Pump head onto the Pump frame**

Secure the pump head using the four M4×10 hexagon socket head bolts and tighten to a torque of 1.6 N·m.

Specifications/Outer Dimensions

Specifications

Information in this section is subject to change without notice.

Model code	Reduction ratio	Motor speed (min^{-1})	Max flow (mL/min)	Max pressure (MPa)	Main port	Motor	Weight (kg)
V-05SS_-V100	1/100	1-23	4.0	0.7	6 mm/10 mm O.D. SUS tube fitting or Rc¼" I.D. female adapter	30W BLDC motor	2.7
V-10_S_ _-V010	1/10	8-232	162	0.3-0.7 (NOTE)			
V-10_S_ _-V005	1/5	16-580	406				2.9
V-15_S_ _-V010	1/10	8-232	672	0.2-0.5 (NOTE)	13 mm O.D. SUS tube fitting or Rc⅜" I.D. female adapter	60W BLDC motor	6.2
V-15_S_ _-V005	1/5	16-580	1682				

*Each model code follows this pattern:

V- [Size] [Plunger/Cylinder] [Wet end] [Flushing] [Main Port] - V100

Plunger/Cylinder code (first blank):
A = Al_2O_3/Al_2O_3
S = SiC/ SiC

Flushing port code (second blank):
P = With flushing ports
No code = No flushing ports

Main port code (third blank):
1 = 6 mm O.D. SUS tube fitting (V-05 / V-10)
2 = 10 mm O.D. SUS tube fitting (V-05 / V-10)
3 = 13 mm O.D. SUS tube fitting (V-15)
4 = Rc¼" I.D. female adapter (V-05 / V-10)
5 = Rc⅜" I.D. female adapter (V-15)

*The above specifications are based on pumping clean water at full stroke length, ambient temperature, and zero discharge pressure.
*Motor speed may vary depending on discharge pressure.
*At a maximum head angle of 20°, the liquid volume per stroke is 0.17 mL for the V-05, 0.7 mL for the V-10, and 2.9 mL for the V-15.
*Allowable ambient temperature: 5–40°C (41–104°F)
*Allowable ambient humidity: 35–85% RH (non-condensing)
*Flush the pump head with clean water or an appropriate solvent after operating with crystallizing or adhesive liquids.

NOTE: The maximum pressure change for each flow rate range is shown below.

V-10 Pressure for each flow rate range

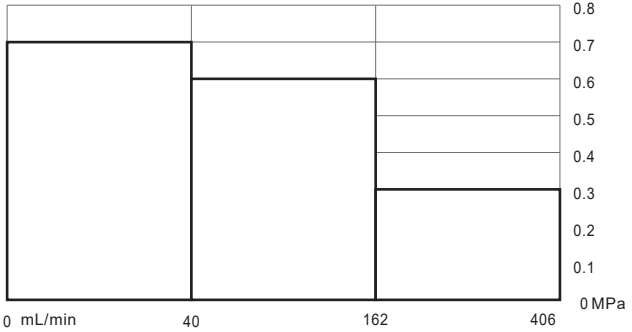

V-15 Pressure for each flow rate range

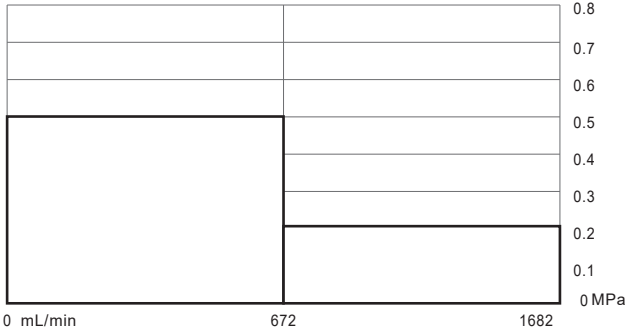

Outer dimensions

All sizes are given in millimetres (mm).

■ V-05 pump with our standard 30 W motor

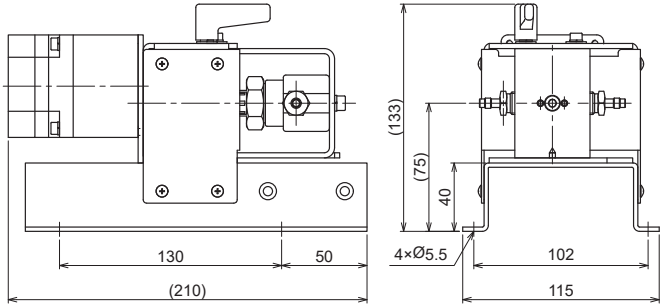

■ V-10 pump with our standard 30 W motor

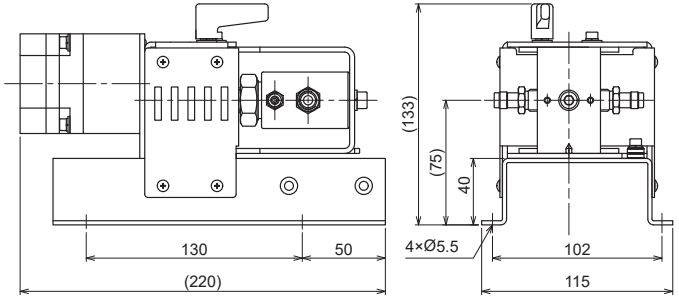

■ **V-15 pump with our standard 60 W motor**

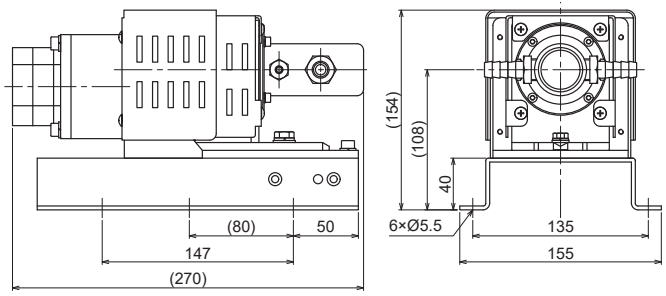

EC DECLARATION OF CONFORMITY

A copy of the original Declaration of Conformity

(SUPPLIER'S NAME)
WE
IWAKI CO.,LTD.

(ADDRESS)
6-6 2-CHOME KANDA-SUDACHO CHIYODA-KU TOKYO JAPAN

(PRODUCT)
DECLARE UNDER OUR SOLE RESPONSIBILITY THAT THE PRODUCTS
HICERA PUMP

(MODEL NAME)
V SERIES

TO WHICH THIS DECLARATION RELATES ARE IN CONFORMITY
WITH THE FOLLOWING STANDARDS OR DIRECTIVES AS FAR AS APPLICABLE

(DIRECTIVES)
MACHINERY DIRECTIVE 2006/42/EC (ANNEX IIA)
RoHS DIRECTIVE 2011/65/EU

(STANDARDS)
EN ISO12100: 2010 EN809: 1998 + A1: 2009 EN IEC63000: 2018

(A PERSON WHO IS AUTHORISED TO COMPILE THE TECHNICAL FILE
IN THE COMMUNITY)
IWAKI EUROPE GMBH
SIEMENSRING 115 D-47877 WILLICH GERMANY

NOTE: THIS DECLARATION BECOMES INVALID IF TECHNICAL OR OPERATIONAL MODIFICATIONS ARE INTRODUCED WITHOUT THE MANUFACTURER'S CONSENT.

T. Sawada.

TSUTOMU SAWADA
DEPUTY SENIOR GENERAL MANAGER,
QUALITY ASSURANCE HEAD OFFICE

Tokyo, Sep. 13, 2021

(PLACE AND DATE OF ISSUE) **(NAME AND SIGNATURE OR EQUIVALENT MARKING OF AUTHORIZED PERSON)**

DOCUMENT NO. IS-51K-522-3

https://www.iwakipumps.jp

IWAKI CO.,LTD. 6-6 Kanda-Sudacho 2-chome Chiyoda-ku Tokyo 101-8558 Japan
TEL: +81 3 3254 2935 FAX: +81 3 3252 8892

European Headquarter / IWAKI Europe GmbH
TEL: +49 2154 9254 0 FAX: +49 2154 9254 48

Germany / IWAKI Europe GmbH
TEL: +49 2154 9254 50 FAX: +49 2154 9254 55

The Netherlands / IWAKI Europe GmbH (Netherlands Branch)
TEL: +31 74 2420011 FAX: +49 2154 9254 48

Italy / IWAKI Europe GmbH (Italy Branch)
TEL: +39 0445 561219 FAX: +39 0445 569088

Spain / IWAKI Europe GmbH (Spain Branch)
TEL/FAX: +34 934 741 638

Poland / IWAKI Europe GmbH (East Europe Branch)
TEL: +48 12 347 0755 FAX: +48 12 347 0900

Denmark / IWAKI Nordic A/S
TEL: +45 48 242345

Finland / IWAKI Suomi Oy
TEL: +358 10 201 0490

Norway / IWAKI Norge AS
TEL: +47 23 38 49 00

Sweden / IWAKI Sverige AB
TEL: +46 8 511 72900

Belgium / IWAKI Belgium N.V.
TEL: +32 13 670200 FAX: +32 13 672030

France / IWAKI France S.A.
TEL: +33 1 69 63 33 70 FAX: +33 1 64 49 92 73

U.S.A. / IWAKI America Inc.
TEL: +1 508 429 1440 FAX: +1 508 429 1386

Brazil / IWAKI Do Brasil Comercio De Bombas Hidraulicas LTDA.
TEL/FAX: +55 19 3244 5900

China (Shanghai) / IWAKI Pumps (Shanghai) Co., Ltd.
TEL: +86 21 6272 7502 FAX: +86 21 6272 6929

China (Hong Kong) / IWAKI Pumps Co., Ltd.
TEL: +852 2607 1168 FAX: +852 2607 1000

China (Guangzhou) / GFTZ IWAKI Engineering & Trading Co., Ltd.
TEL: +86 20 84350603 FAX: +86 20 84359181

China (Shenzhen) / IWAKI Pumps (Shenzhen) Co., Ltd.
TEL: +86 0755 8656 3696

Singapore / IWAKI Singapore Pte Ltd.
TEL: +65 6316 2028 FAX: +65 6316 3221

Indonesia / IWAKI Singapore Pte Ltd. (Indonesia Office)
TEL: +62 21 6906606 FAX: +62 21 6906612

Malaysia / IWAKIm SDN. BHD.
TEL: +60 3 7803 8807 FAX: +60 3 7803 4800

Korea / IWAKI Korea Co., Ltd.
TEL: +82 2 6238 4800 FAX: +82 2 6238 4801

Taiwan / IWAKI Pumps Taiwan Co., Ltd.
TEL: +886 2 8227 6900 FAX: +886 2 8227 6818

Thailand / IWAKI (Thailand) Co., Ltd.
TEL: +66 2 322 2471 FAX: +66 2 322 2477

Australia / IWAKI Pumps Australia Pty Ltd.
TEL: +61 2 9899 2411 FAX: +61 2 9899 2421