Iwaki Hicera Pump

V-07AF4 (built-in type)

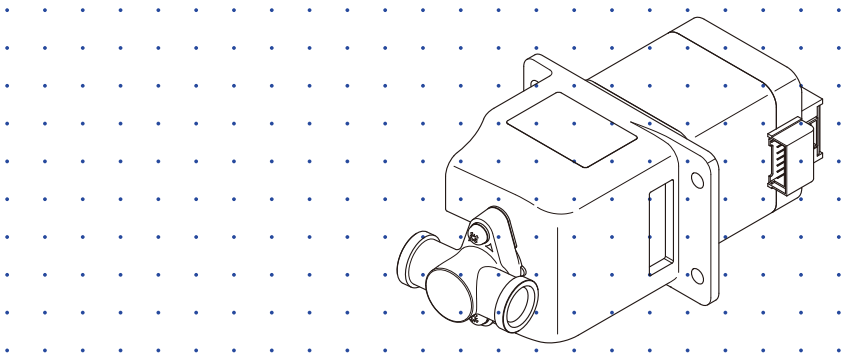

Instruction manual

Thank you for choosing our product.

⚠ Please read through this instruction manual before use.

This instruction manual describes important precautions and instructions for the product. Always keep it on hand for quick reference.

© 2014 IWAKI CO., LTD.

Order confirmation

Open the package and check that the product conforms to your order. If any problem or inconsistency is found, immediately contact your distributor.

a. Check if the delivery is correct.

Check the nameplate to see if the information such as model codes is as ordered.

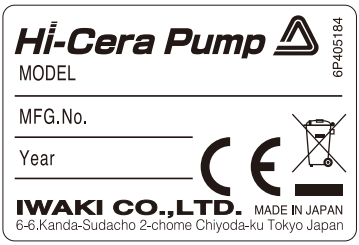

*The CE marking on our product(s) is for us to market the product(s) into the European market, however, the CE marking does not ensure any safety or conformity of the product(s) outside the European market.
When the pump is incorporated into the equipment marketed in the European market, such equipment must meet all the requirements of applicable directives. In such a case, any person who places the equipment on the market must carry a CE mark on the equipment as a manufacturer.

b. Check if the delivery is damaged or deformed.

Check for transit damage and loose bolts.

Contents

Order confirmation **2**

Safety instructions ***5***

Warning **6**

Caution **7**

Precautions for use **9**

Overview ***11***

Introduction **11**

Intended use 11

Pump structure & Operating principle 11

Part names **12**

Pump 12

Identification codes **13**

Installation ***14***

Pump mounting **14**

Pipework **16**

Tube connection 16

Wiring **17**

Lead wires 17

Motor 18

Motor specification 18

Wiring diagram 18

Motor connector specification 18

Sensor 19

Motor rotation detection 19

Wiring diagram 19

Sensor connector specification 19

Operation ***20***

Operation **20**

Starting the pump 20

Stoppage 21

Preventative measures against seizing 22

Speed of acceleration 22

Inching 23

Restart at the time of motor step-out 23

Maintenance ***24***

Troubleshooting **24**

Inspection **26**

Daily inspection 26

Specifications/Outer dimensions **27**

Specifications 27

Pump unit 27

Stepping motor 27

Hall IC 27

Outer dimensions 28

EC DECLARATION OF CONFORMITY 29

Safety instructions

Read through this section before use. This section describes important information for you to prevent personal injury or property damage.

■ Symbols

In this instruction manual, the degree of risk caused by incorrect use is noted with the following symbols. Please pay attention to the information associated with the symbols.

⚠ **WARNING**	Indicates mishandling could lead to a fatal or serious accident.
⚠ **CAUTION**	Indicates mishandling could lead to personal injury or property damage.

A symbol accompanies each precaution, suggesting the use of "Caution", "Prohibited actions" or specific "Requirements".



⚠ Export Restrictions

Technical information contained in this instruction manual might be treated as controlled technology in your countries, due to agreements in international regime for export control.

Please be reminded that export license/permission could be required when this manual is provided, due to export control regulations of your country.

⚠ WARNING

Turn off power before service

Risk of electrical shock. Be sure to turn off power to stop the pump and related devices before service is performed. Prevent others from restoring power during service.



Stop operation

If you notice any abnormal or dangerous conditions, suspend operation immediately and inspect/solve problems.



Do not use the pump in any condition other than its intended purpose

The use of the pump in any conditions other than those clearly specified may result in failure or injury. Use this product in specified conditions only.



Do not disassemble or modify the pump

Alterations to the pump carry a high degree of risk. It is not the manufacturer's responsibility for any failure or injury resulting from alterations to the pump.



Wear protective clothing

Always wear protective clothing such as an eye protection, chemical resistant gloves, a mask and a face shield during maintenance work.



Do not damage the power cable

Do not pull, knot, or crush the power cable. Damage to the power cable could lead to a fire or electrical shock if cut or broken.



⚠ CAUTION

Qualified personnel only

The pump should be handled or operated by qualified personnel with a full understanding of the pump. Any person not familiar with the product should not take part in the operation or maintenance of the pump.


Requirement

Use specified power only

Do not apply power other than that specified on the nameplate. Otherwise, failure, fire or electrical shock may result. Ensure the pump is properly grounded.


Prohibited

Do not run pump dry

Do not run the pump dry for more than 3 minutes (even during degassing). Otherwise, frictional heat may build up and cause the plunger to seize in the cylinder. Optimize your system to eliminate any possibility of dry running.


Caution

Do not close the suction or discharge line during operation

Operating the pump with a closed suction or discharge line can cause abnormal pressure buildup, resulting in damage to the pump, piping, and system components.


Prohibited

Keep electric parts and wiring dry

Risk of fire or electric shock. Install the pump where it can be kept dry.


Prohibited

Ventilation

Fumes or vapours can be hazardous with certain solutions. Ensure proper ventilation at the operation site.


Caution

Do not install/store the pump:

- In a flammable atmosphere.
- In a dusty/humid environment.
- Where ambient temperature can exceed 0-60ºC (32-140ºF) (storage temperature : -20 - 60ºC or -4 - 140ºF).
- In direct sunlight or wind & rain.


Prohibited

Electromagnetic precautions

This product is not protected against electromagnetic fields. Take appropriate measures as necessary.


Requirement

Spill precautions

Ensure protection and containment of solution in the event of plumbing or pump damage (secondary containment).


Requirement

Do not use the pump in a wet location

The pump is not waterproof. Use of the pump in wet or extremely humid locations could lead to electric shock or short circuit.


Prohibited

Install a GFCI (earth leakage breaker)

An electrical failure of the pump may adversely affect other devices on the same line. Purchase and install a GFCI (earth leakage breaker) separately.


Electrical shock

Do not use a damaged pump

Use of a damaged pump could lead to an electric shock or death.


Prohibited

Disposal of a used pump

Dispose of any used or damaged pump in accordance with local rules and regulations. If necessary, consult a licensed industrial waste disposal company.


Requirement

Install a relief valve

If the discharge line's pressure rating cannot withstand the maximum possible pressure, install a relief valve to depressurize the line. The relief valve set pressure must not exceed the discharge line's maximum allowable pressure.


Requirement

Do not touch the pump or pipe with bare hands

Risk of burns. The surface temperature of the pump or piping becomes very high during and immediately after operation.


Caution

Precautions for use

- Electrical work should be performed by a qualified electrician. Otherwise, personal injury or property damage could result.

Caution

- Anchor the pump with four M4 bolts so it doesn't vibrate. Mount vibration isolators to each pump foot as necessary.

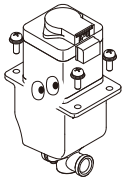

- When two or more pumps are installed together, vibration may be significant, resulting in poor performance or failure. Select a solid foundation (concrete) and fasten anchor bolts securely to prevent vibration during operation.

Caution

- Allow sufficient space around the pump for easy access and maintenance.

Caution

- Install the pump as close to the supply tank as possible.

Caution

- Use care handling the pump. Do not drop. An impact may affect pump performance. Do not use a pump that has been damaged to avoid the risk of electrical damage or shock.



- Do not operate the pump while wet with solution or water. Failure or injury may result. Immediately dry off the pump if it gets wet.

Caution

- Commissioning is required in order to expel air from tubing.

Requirement

• Solution in the discharge line may be under pressure. Release the pressure from the discharge line before disconnecting plumbing or disassembly of the pump to avoid solution spray.


Requirement

• Do not allow foreign matters to enter the pump. Clogging may cause the plunger to be locked or damaged, hindering a liquid circulation.


Caution

• Do not clean the pump or nameplate with a solvent such as benzine or thinner. This may discolour the pump or erase printing. Use a dry or damp cloth or a neutral detergent.



• Always stop the pump with the plunger extended to the full, so the cylinder will not retain liquid in it.


Requirement

• Observe the maximum allowable discharge pressure of 40kPa, or the pump may be damaged.


Prohibited

• The motor cable and the sensor cable are snap fitted to each connector. Do not pull them hard, or the connectors may be damaged.


Caution

• This pump is designed for delivery of pure water only. Do not use any other solution with this pump.


Prohibited

• In accordance with the European Directive 2012/19/EU on waste electrical and electronic equipment (WEEE), this product features the crossed-out wheelie bin symbol. When this product is disposed of in household wastes, toxic components included in it can cause major environmental and human health problems. Use appropriate waste collection systems for recovery and recycling. Contact your local distributor or nearest Iwaki company for the detailed collection systems.



Overview

Pump characteristics, features and part names are described in this section.

Introduction

Intended use

This product is a reforming water pump designed for the delivery of pure water in the reformer of the fuel cell system such as PEFC/SOFC.

Pump structure & Operating principle

The Hicera pump is a metering pump with fine ceramic wet ends such as a plunger, a cylinder and other related parts.
The plunger reciprocates and rotates in the cylinder where liquid is taken in from a suction line and then delivered to a discharge line.

Principle of operation

In the suction process, the rotating plunger contracts to take in liquid into the cylinder from a suction line as the duct on the plunger passes the inlet.
In the discharge process, the rotating plunger extends to let out liquid from the cylinder to a discharge line as the duct on the plunger passes the outlet.

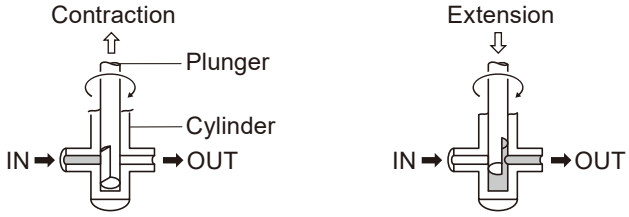

⇨: Plunger reciprocation
→: Plunger rotation
➡: Flow direction

Pump

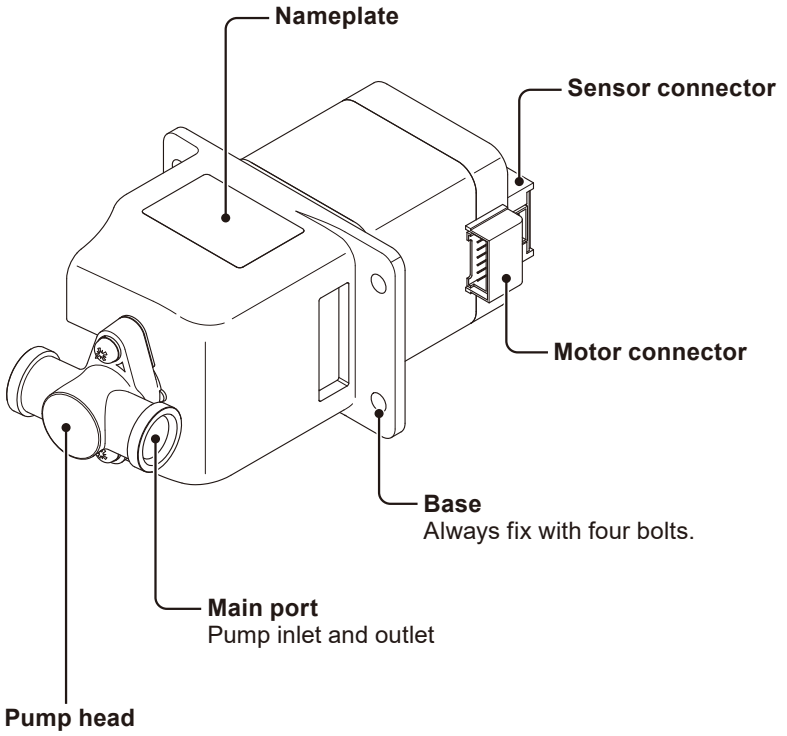
Nameplate
Sensor connector
Motor connector
Base
Always fix with four bolts.
Main port
Pump inlet and outlet
Pump head

Identification codes

The model codes represent the following information.

V - 07 A F 4
a b c d

a. Series name
V: Hicera pump

b. Plunger diameter
07: ø7mm

c. Plunger/Cylinder
A: Al_2O_3/Al_2O_3

d. Wet end materials
F: PVDF

Installation

Installation of the pump, tubing and wiring are described in this section.

Observe the following points

- Risk of electrical shock. Be sure to turn off power to stop the pump and related devices before service is performed.
- If you notice any abnormal or dangerous conditions, suspend operation immediately and inspect/solve problems.
- Do not place explosive or flammable material near the pump.
- Do not use a damaged pump. Use of a damaged pump could lead to an electric shock or death.
- This dedicated pump is designed for built-in application only. Its rotating parts are not totally covered for the prevention of accidental access to them. Take preventive measures as necessary.

Pump mounting

Select an installation location and mount the pump.

Necessary tools

- Four M4 bolts (pump mounting)
- Adjustable wrench or spanner

1 **Select a suitable place.**

See page 9, the "Precautions for use" section, and select the best installation location.

Install the pump as close to the supply tank as possible under flooded suction conditions.

2 Select a mounting direction.

NOTE

Mounting directions are limited. Any direction other than the following examples may cause performance reduction or failure.

a. Laid in a vertical position on its head, with the motor upward.

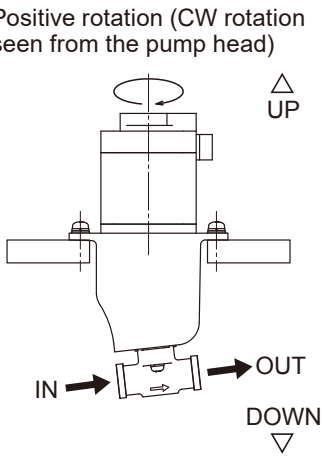

3 Anchor the pump by the M4 bolts.

Be sure to fix the pump at four points.

NOTE

Install vibration isolators (purchase separately) to each fixing point as necessary.

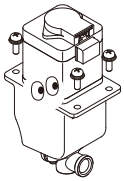

Tube connection

Observe the following points for plumbing.

- Have tubing length shortest with the minimum number of bends in order to reduce pipe resistance.
- The inlet must be directed downwards to take in and deliver liquid upwards.
- The inlet and outlet ports should be completely sealed for the prevention of air ingress into a flow line. An imperfect suction line connection entrains air and reduces performance.
- Select an optimal size for the male quick fasteners, clips and tubing that are fitted to the inlet/outlet ports (female quick fasteners). The tubes should be pressure-/corrosion-resistant to specified operating conditions.
- Always secure the male quick fasteners to the pump inlet/outlet with the clips in a proper size so that they will not be disconnected under pressure or by an external force.
- Always install and run the pump in a flooded suction condition with a shutoff valve installed in a suction line.
- The PVDF fitting may break. Do not use excessive force.

1 **Connect tubes into the inlet and outlet by means of the coupling of the P7 male and female quick fasteners.**

Wiring

A driver and PLC/controller are necessary for pump operation. Purchase separately.

Observe the following points

- Electrical work should be performed by a qualified electrician. Always observe applicable codes or regulations.
- Do not perform wiring work while electric power is ON. Otherwise, an electrical shock or a short circuit may result. Be sure to turn off the power before wiring work.

Lead wires

Use two UL1007 AWG #24 lead wires. One is for motor wiring and the other is for sensor wiring.

Motor

This pump is equipped with an 2-phase bipolar stepper motor. Select and electrically connect a suitable driver according to the motor specification below.

■ Motor specification

Driving method	Constant current drive
Power voltage range	24VDC
Motor current	0.23A/phase (0-PEAK)
Rated microstep	1/16
Rated pull-out torque	150mN•m or more (at 200min^{-1})

NOTE

Keep the motor surface temperature 70ºC (158ºF) or below. Or the stepper motor may break or the service life may be shorten.

■ Wiring diagram

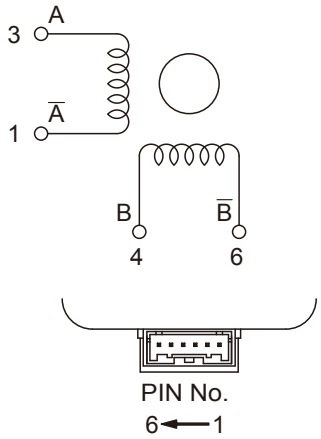

STEP \ PIN No. / Ph	3 (A)	4 (B)	1 ($\bar{A}$)	6 ($\bar{B}$)
1	+	+	-	-
2	-	+	+	-
3	-	-	+	+
4	+	-	-	+

■ Motor connector specification

	Motor	User PLC/Controller
Maker	J.S.T. Mfg. Co.,Ltd.	J.S.T. Mfg. Co.,Ltd.
Housing	B06B-PASK	PAP-06V-S
Contact (post)	-	SPHD-001T-P0.5
Connection	Snap-in	

Sensor

■ Motor rotation detection

A pulse signal is transmitted per motor rotation from the sensor to an external device.

■ Wiring diagram

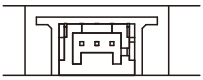

PIN No.
3 2 1

PIN No.	SIGNAL
1	GND
2	OUT
3	Vcc

■ Sensor connector specification

	Sensor	User PLC/Controller
Maker	J.S.T. Mfg. Co.,Ltd.	J.S.T. Mfg. Co.,Ltd.
Housing	SM03B-PBVSS-TB	PBVP-03V-S
Contact (post)	-	SPHD-001T-P0.5
Connection	Snap-in	

Operation

The pump becomes ready after pipework and wiring is completed.

Operation

Do not run pump dry or run it with a discharge valve or a suction valve closed for more than 3 minutes.

Starting the pump

1 **Check if plumbing and wiring are done correctly.**

2 **Check the spec label to see if the power supply voltage is correct.**

3 **Fully open both suction and discharge valves.**

4 **Set the speed of acceleration.**

See page 22 for detail.

5 **Prime and run the pump for testing.**

Check the motor rotates clockwise.

*In a positive rotation (a clockwise rotation seen from the pump-head side), liquid flows in the direction as shown.

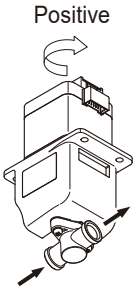

6 **Check liquid flows without a hitch.**

If you notice any abnormality, turn off power and investigate/solve root causes. Refer to the troubleshooting section.

7 **Make sure air has been completely expelled from the pump and a tubing system.**

If not, an accurate flow can not be obtained.

8 **Adjust the number of pulse signals to meet a target flow rate.**

Discharge capacity per minute is determined by the formula of:

Liquid volume per shot (mL/shot) × pump rotation speed (min^{-1})

NOTE

- The enclosure of your equipment in which the pump is built may resonate with a pump operating noise in some rpm range.
- A slight leak may occur in operation from between the plunger and the cylinder depending on individual difference. The leak is allowed as long as the pump meets the specified performance.

Stoppage

1 **Turn off the main power.**

The motor is kept excited when the pulse signal to the motor is just stopped.

2 **Drain and empty the pump head with clean water before a long period (one week or more) of stoppage.**

Preventative measures against seizing

Determine the speed acceleration time and perform inching to keep the optimal pump performance.

■ Speed of acceleration

In order to eliminate the possibility of step-out, always start or stop the motor in a start/stop region (3200pps or below).
Because the maximum allowable start/stop frequency reduces as starting torque (current setting) gets lower, motor acceleration to a specified rate (above 3200pps) with no acceleration time may often trigger motor step-out.
When a stepping motor driver is set to 1/16 microstep and 0.23A/phase (0-PEAK) and a specified rate is 10667pps, for example, start the motor at 3200pps or below and take at least 1sec for acceleration to 10667pps.
Note a longer acceleration time may be required depending on operating conditions such as pipe resistance and other factors. Determine an optimal acceleration time according to your system.

Recommendable setting (operation above 3200pps)

Number of pulses at start (start/stop region): 3200pps (60min^{-1}) or below
Acceleration time required to 10667pps : 1sec or more

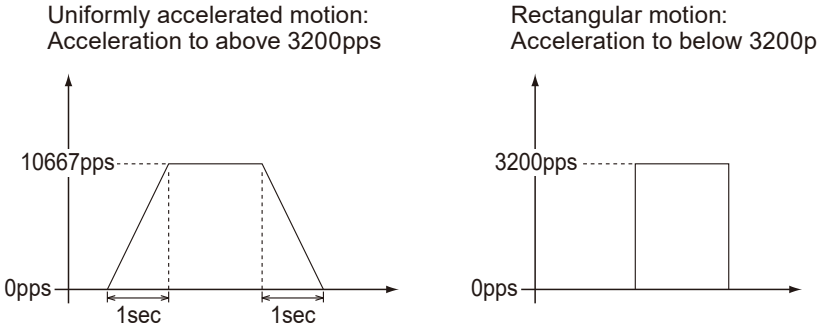

■ Inching

Positive ions such as calcium, magnesium, natrium, kalium, iron and negative ions such as chloride, sulphate, hydrogen carbonate and silica which present in pure water, even though they exist in small amounts, produce salt through ionic bond. The salt can build up with time in between the cylinder and the plunger and finally lead to seize-up. To prevent the occurrence of the failure, take the measures below:

a. Keep the ion level low as much as possible.

b. Rotate the motor one revolution in negative and then positive rotation (inching) per hour while your system is left stopped. Inching will keep a plunger wet in the cylinder and will prevent plunger lock. Be sure to set the optimal acceleration time if the motor speed rises above 3200pps (60min^{-1}). See page 22, the "Speed of acceleration" section, for detail.

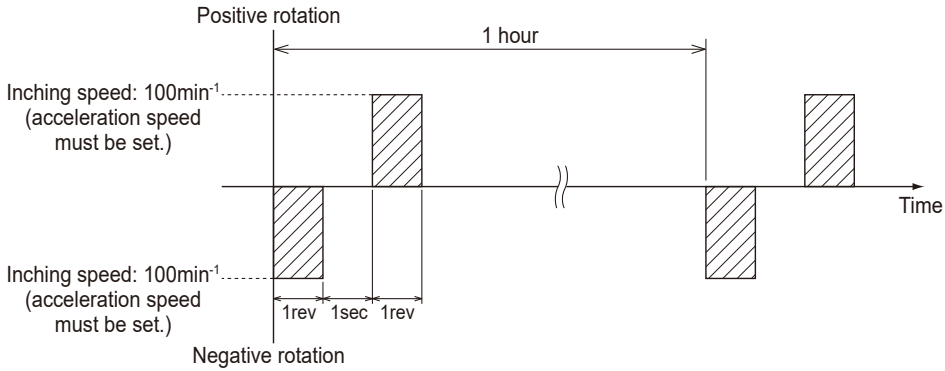

■ Restart at the time of motor step-out

The operation of the stepping motor is not under feedback control. If the motor steps out, stop sending the pulse signal from the PLC once and then restart operation in the start/stop region with an optimal speed of acceleration.

NOTE

If the motor does not restart, check the pump or your PLC or controller.

Maintenance

Troubleshooting, inspection and specifications are described in this section.

Important

- Follow instructions in this manual for troubleshooting or daily inspection. Do not disassemble the pump.
- Always wear protective clothing such as an eye protection, gloves, a mask and a face shield when mounting/demounting the pump into/from piping.
- Risk of electrical shock. Be sure to turn off power to stop the pump and related devices before service is performed.
- Risk of scald injury. Wait until the pump and piping have cooled down before service is performed.

Troubleshooting

First check the following points. If the following measures do not help remove problems, contact us or your nearest distributor.

States	Possible causes	Solutions
The pump does not start to run.	Power is not supplied.	• Supply power.
	Wrong wiring or disconnection	• Correct wiring.
	Plunger lock due to crystallization	• Replace the pump as necessary.
	Clogging due to foreign matters	• Replace the pump as necessary.
	Faulty driver	• Replace as necessary.
The pump does not deliver liquid during operation.	A suction or a discharge line is closed during operation.	• Open both the suction and discharge lines.
	A supply tank is empty.	• Replenish the supply tank.
	The motor is rotating the other way around.	• Correct wiring.
	Wrong tubing or poor connection	• Check and fix tubing.

States	Possible causes	Solutions
The flow rate is too small.	Air ingress through a tube joint	• Keep tube joints air-tight.
	Development of cavitation	• Reduce a motor rpm, liquid temperature, and tubing resistance.
	Pump rotation speed is too low.	• Increase a rotation speed.
	A suction line is crushed.	• Replace as necessary.
Significant vibration or noise.	Discharge pressure is too high.	• Reduce discharge pressure.
	A suction or a discharge line is closed during operation.	• Open both the suction and discharge lines.
	Air ingress through a tube joint	• Keep tube joints air-tight.
	Development of cavitation	• Reduce a motor rpm, liquid temperature, and tubing resistance.
	A supply tank is empty.*	• Replenish the supply tank.
	Anchor bolts are loose.*	• Fasten anchor bolts.
	Sympathetic vibration with the pump and other parts of system	• Fit vibration isolators to the pump fixing points.
Liquid leaks.	Discharge pressure is too high.	• Reduce discharge pressure.
Pump stops.	Wrong wiring or disconnection	• Correct wiring.
	Plunger lock due to crystallization	• Replace the pump as necessary.
	Clogging due to foreign matters	• Replace the pump as necessary.
	Discharge pressure is too high.	• Reduce discharge pressure.
	Faulty driver	• Replace as necessary.

The causes with the * mark are typical cases of failure.

Inspection

Perform daily inspection to keep pump performance and safety.

Daily inspection

Check the following points. If you notice any abnormal or dangerous conditions, suspend operation immediately and inspect/solve problems according to "Troubleshooting".
When wear parts come to the life limit, replace them with new ones. Contact us or your nearest distributor for detail.

No.	States	Points to be checked	How to check
1	Pumping	• If liquid is pumped.	Flow meter or visual inspection
		• If a discharge and a suction pressure are normal.	Pressure gauge
2	Noise and Vibration	• If abnormal noise or vibration occurs. They are signs of abnormal operation. Mount vibration isolators to the pump fixing points to reduce noise or oscillation as necessary.	Visual or audio inspection
3	Air ingress from pump head joints and a suction line	• If pumped liquid includes air bubbles, check lines for leakage and retighten as necessary.	Visual inspection
4	High surface temperature of the pump and the motor	• If the motor surface temperature is 70ºC (158ºF) or below (the max ambient temperature plus 10ºC or 18ºF at a maximum). Note the pump surface temperature gets high or low along with liquid temperature.	Touch or use a thermometer

Specifications

Information in this section is subject to change without notice.

■ Pump unit

Model code	Flow rate (mL/min)	Discharge pressure (kPa)	Stroke rate (min^{-1})	Pipe coupler	Weight (kg)
V-07AF4	1-20	40	10-200	P7 quick fastener	0.48

*The above information is based on pumping clean water at ambient temperature and rated voltage.
*The maximum flow rate is obtained at the discharge pressure of 0MPa.
*Allowable room temperature: 0-60°C (32-140ºF)
*Allowable storage temperature: -20 - 60°C (-4 - 140ºF), with the pump dry
*Allowable ambient humidity: 35-85%RH (operating/storage environments, non condensing)
*Allowable liquid temperature: 0-60°C (32-140ºF), non freezing
*Noise level: 38dB or below (1m away from the pump head in A scale, with a PPS PMB212C-03W1 driver. See the motor specification on page 18 for the driver setting.)

■ Stepping motor

Type	Basic step angle	Power voltage	Insulation class
2-phase bipolar	1.8º	24VDC	B

■ Hall IC

Power voltage	Output open-circuit voltage	Output inflow current	Output saturation voltage	Power current
3-26.4DC Vcc	26.4Vcc	10mA	0.4 (I=10mA)	6 (Vcc=12V) mA

Outer dimensions

Sizes are shown in mm.

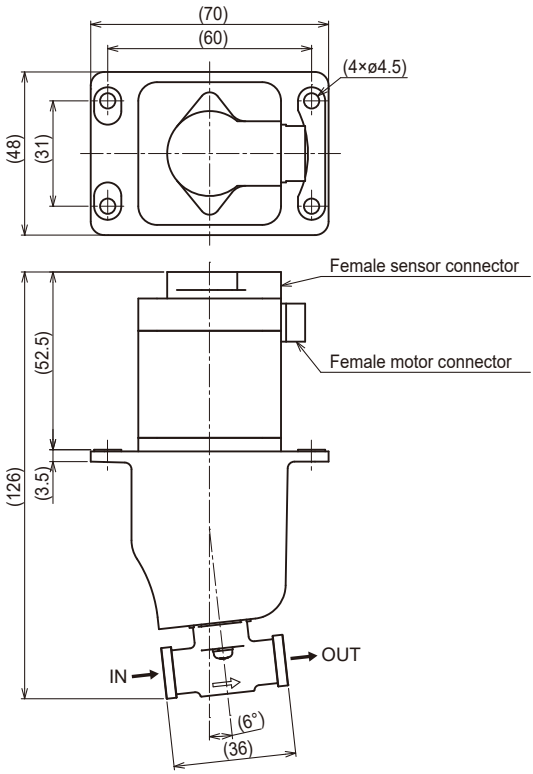

EC DECLARATION OF CONFORMITY

A copy of the original Declaration of Conformity

(SUPPLIER'S NAME)

WE

IWAKI CO.,LTD.

(ADDRESS)

6-6 2-CHOME KANDA-SUDACHO CHIYODA-KU TOKYO JAPAN

(PRODUCT)

DECLARE UNDER OUR SOLE RESPONSIBILITY THAT THE PRODUCTS

HICERA PUMP

(MODEL NAME)

V SERIES

TO WHICH THIS DECLARATION RELATES ARE IN CONFORMITY
WITH THE FOLLOWING STANDARDS OR DIRECTIVES AS FAR AS APPLICABLE

(DIRECTIVES)

MACHINERY DIRECTIVE 2006/42/EC (ANNEX IIA)
RoHS DIRECTIVE 2011/65/EU

(STANDARDS)

EN ISO12100:2010 EN809:1998+A1:2009 EN IEC63000:2018

(A PERSON WHO IS AUTHORISED TO COMPILE THE TECHNICAL FILE
IN THE COMMUNITY)

IWAKI EUROPE GMBH
SIEMENSRING 115 D-47877 WILLICH GERMANY

NOTE: THIS DECLARATION BECOMES INVALID IF TECHNICAL OR OPERATIONAL MODIFICATIONS ARE INTRODUCED WITHOUT THE MANUFACTURER'S CONSENT.

T. Sawada.

TSUTOMU SAWADA
DEPUTY SENIOR GENERAL MANAGER,
QUALITY ASSURANCE HEAD OFFICE

Tokyo, Sep. 13, 2021

(PLACE AND DATE OF ISSUE) **(NAME AND SIGNATURE OR EQUIVALENT MARKING OF AUTHORIZED PERSON)**

DOCUMENT NO. IS-51K-522-3

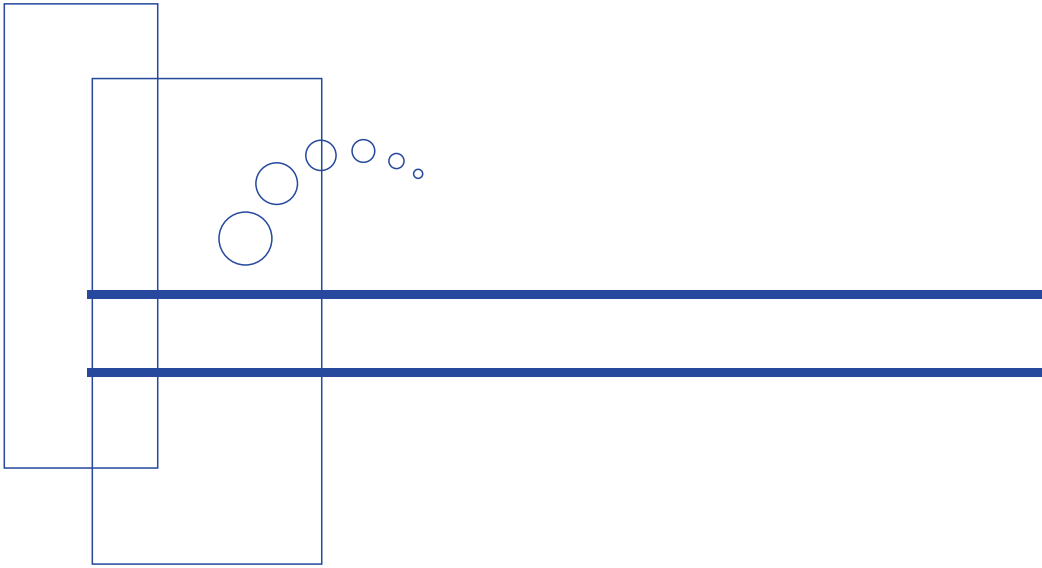

IWAKI

https://www.iwakipumps.jp

IWAKI CO.,LTD. 6-6 Kanda-Sudacho 2-chome Chiyoda-ku Tokyo 101-8558 Japan
TEL: +81 3 3254 2935 FAX: +81 3 3252 8892

European Headquarter / IWAKI Europe GmbH
TEL: +49 2154 9254 0 FAX: +49 2154 9254 48

Germany / IWAKI Europe GmbH
TEL: +49 2154 9254 50 FAX: +49 2154 9254 55

The Netherlands / IWAKI Europe GmbH (Netherlands Branch)
TEL: +31 74 2420011 FAX: +49 2154 9254 48

Italy / IWAKI Europe GmbH (Italy Branch)
TEL: +39 0445 561219 FAX: +39 0445 569088

Spain / IWAKI Europe GmbH (Spain Branch)
TEL/FAX: +34 934 741 638

Poland / IWAKI Europe GmbH (East Europe Branch)
TEL: +48 12 347 0755 FAX: +48 12 347 0900

Denmark / IWAKI Nordic A/S
TEL: +45 48 242345

Finland / IWAKI Suomi Oy
TEL: +358 10 201 0490

Norway / IWAKI Norge AS
TEL: +47 23 38 49 00

Sweden / IWAKI Sverige AB
TEL: +46 8 511 72900

Belgium / IWAKI Belgium N.V.
TEL: +32 13 670200 FAX: +32 13 672030

France / IWAKI France S.A.
TEL: +33 1 69 63 33 70 FAX: +33 1 64 49 92 73

U.S.A. / IWAKI America Inc.
TEL: +1 508 429 1440 FAX: +1 508 429 1386

Brazil / IWAKI Do Brasil Comercio De Bombas Hidraulicas LTDA.
TEL/FAX: +55 19 3244 5900

China (Shanghai) / IWAKI Pumps (Shanghai) Co., Ltd.
TEL: +86 21 6272 7502 FAX: +86 21 6272 6929

China (Hong Kong) / IWAKI Pumps Co., Ltd.
TEL: +852 2607 1168 FAX: +852 2607 1000

China (Guangzhou) / GFTZ IWAKI Engineering & Trading Co., Ltd.
TEL: +86 20 84350603 FAX: +86 20 84359181

China (Shenzhen) / IWAKI Pumps (Shenzhen) Co., Ltd.
TEL: +86 0755 8656 3696

Singapore / IWAKI Singapore Pte Ltd.
TEL: +65 6316 2028 FAX: +65 6316 3221

Indonesia / IWAKI Singapore Pte Ltd. (Indonesia Office)
TEL: +62 21 6906606 FAX: +62 21 6906612

Malaysia / IWAKIm SDN. BHD.
TEL: +60 3 7803 8807 FAX: +60 3 7803 4800

Korea / IWAKI Korea Co., Ltd.
TEL: +82 2 6238 4800 FAX: +82 2 6238 4801

Taiwan / IWAKI Pumps Taiwan Co., Ltd.
TEL: +886 2 8227 6900 FAX: +886 2 8227 6818

Thailand / IWAKI (Thailand) Co., Ltd.
TEL: +66 2 322 2471 FAX: +66 2 322 2477

Australia / IWAKI Pumps Australia Pty Ltd.
TEL: +61 2 9899 2411 FAX: +61 2 9899 2421

T898-4 '26/09